CAT 1

24

DRY DISCONNECTS

COUPLERS

COUPLER x FEMALE NPT

ADAPTERS

ADAPTER x FEMALE NPT

REPAIR KITS



SEALFAST

THE SIMPLE SOLUTION





INDEX

- ADAPTERS & COUPLERS 2-3
- REPAIR DIAGRAMS 4-5
- TECHNICAL DATA 6-9



TERMS OF SALE

TERMS:

1/2% 10 Days, net 30 Days

FREIGHT:

All shipments are made FOB Seal Fast Inc. or Point of Manufacturer. (Applies to shipments from Houston Warehouse Only) Freight prepaid on $1500 Net Couplings and accessories, $2500 PVC Tubing, Braided Tubing, Fire & Mill hose. Freight prepaid on $4000 Net Couplings, Rubber Hose, PVC Hose and Sheet Rubber with the exclusion of all PVC Suction including 6" and 8" PVC Suction ONLY orders. If combined with other items freight is prepaid at $3000 Net, otherwise these items will Not be applied toward prepaid freight. **Effective immediately, regardless of invoice value, all uncoupled cut lengths of hoses are shipped FOB Seal Fast Inc.** Seal Fast Inc. reserves the right to determine the most Economical shipping method on all prepaid shipments. **In addition, Seal Fast Inc. reserves the right to refuse any prepaid shipments exceeding 6% freight cost of the order unless items are added or subtracted to keep said freight cost at or below 6%.** Applies to Continental United States, excluding Alaska and Hawaii. **Any evidence of shortage must be reported to Seal Fast Inc. within 10 days. Any Damage to hose/hoses, etc. customer is responsible for filing a claim with the delivery carrier within 10 days. Seal Fast Inc. will not issue credit.**

ALL UPS prepay and add or collect shipments will endure a **$7.50** shipping and handling fee including All backorders. All drop shipments will endure a $5.00 fee.

WARRANTY:

Products are warranted against defects in workmanship and defects in material. Products having such defects will be replaced or credited as Seal Fast elects. Liability is limited to the invoice value of the defective item. Our responsibility shall not exceed the original purchase price of the defective product. In any event, Seal Fast, Inc. shall not be held responsible for any special or consequential damages.

RETURNED GOODS:

If for any reason you wish to return goods, please contact Seal Fast Inc. for prior authorization number. Goods must be returned within 30 days and must be in new and resaleable condition. Minimum handling charge is 15%.

All discrepancies in shipment / invoice must be reported within 10 days of receipt of goods.

PROMPT PAYMENT:

Orders receive preferred treatment when the account is paid promptly. Orders may be held up if any unpaid invoice exceeds 30 days.

MINIMUM INVOICE:

All invoices are subject to a minimum billing charge of 50.00 net. Returned checks are subject to a $25.00 service charge.

GENERAL:

Orders will be accepted subject to delays caused by accident, strike, fire or other causes beyond the control of the seller including failure of seller's suppliers to deliver. Prices, discounts and other specifications are subject to change without notice. All prices are subject to any applicable taxes imposed. The possessions of this price schedule is not to be construed as an offer to sell at the prices shown. Special price for volume quotes will be accepted in writing only.

PLEASE NOTE:

Extra care is taken in the preparation of this literature but Seal Fast, Inc. is not responsible for any inadvertent typographical errors or omissions.

SEAL FAST, INC.

**8609 City Park Loop,
Houston, TX 77013**

(713) 675-6324 or 800-231-0734 | FAX (713) 675-0146 or 800-681-1515 | E-mail sales@sealfast.com

DISCLAIMERS

Product Images

- Seal Fast makes every reasonable effort to show accurate product representation, however pictures are for reference only, and do not necessarily reflect the exact product you will receive.
- Seal Fast reserves the right to alter product appearance without notice. Some product features shown in pictures may no longer be available.

Product Specifications

- Seal Fast is continuously working to provide the best quality for the best price.
- We reserve the right to alter product specifications without notice.

Product Usage

- Our Sales Team will do their best to assist in choosing the best product for a particular application. However, it is ultimately the customer's responsibility to determine the correct product for the correct application.
- Seal Fast will not be held liable for the abuse or misuse of our products in a manner in which they are not designed.
- Seal Fast cannot guarantee the integrity of an assembly if other manufacturers parts are used.

Product Availability

- Seal Fast reserves the right to discontinue products at any time without prior notice.

Product Pricing

- Seal Fast is constantly doing our best to maintain pricing levels. However, circumstances change and while many prices go down, others will increase.
- Please contact your sales associate for current pricing.

Custom Made Products

- All custom made product sales are final and Non-Refundable.

ADAPTER X FEMALE NPT

Working pressure:
- 1-1/2" and 2" at 150 psi
- 3" at 125 psi

Size Considerations		
SIZES	Dry - Disconnect Adapter or Coupler	Cam & Groove Adapter or Coupler
1-1/2"	1-1/2"	2"
2"	2"	2-1/2"
3"	3"	4"

WARNING:

****S.F.I. Can not be held responsible for the integrity of field rebuilt products. It is strongly recommended that the procedures outlined in the instructions, supplied with the part, be followed and the part be leak tested before placing it back in service. Instructions also on request.**





Adapter x Female NPT

	ALUMINUM VITON*		316 SS VITON*	
SIZES	Part #	List	Part #	List
1-1/2"	622A-150		672A-150	
2"	622A-200		672A-200	
3"	622A-300		672A-300	

*VITON is a registered trademark of DuPont Dow Elastomer

Adapter x Female NPT

	ALUMINUM PTFE*		316 SS PTFE*	
Part #	List	Part #	List
623A-150		673A-150	
623A-200		673A-200	
623A-300		673A-300	

REPAIR KITS & SECURITY CHAINS



	VITON*	
	Part #	List
1-1/2"	RK 150AV	
2"	RK 200AV	
3"	RK 300AV	

*VITON is a registered trademark of DuPont Dow Elastomer

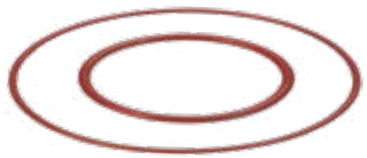

	PTFE	
	Part #	List
1-1/2"	RK 150AT	
2"	RK 200AT	
3"	RK 300AT	

	Part #	List
Steel 6" Security Chain w/Safety Clip	SC 600	
SS 6" Security Chain w/Safety Clip	SC 600SS	



COUPLER X FEMALE NPT





-Not to be used as a shut off valve.
-Coupler with self-locking handles
-Working Pressure:
1-1/2" & 2" at 150 psi
3 at 125 psi

Size Considerations	
Dry-Disconnect Adapters or Couplers	Cam & Groove Adapters or Couplers
763D-150 | 2"	772D-150 | 2"
763D-200 | 2-1/2"	772D-200 | 2-1/2"
762D-300 | 4"	772D-300 | 4"

Coupler x Female NPT

	ALUMINUM VITON*		316 SS VITON*	
SIZES	Part #	List	Part #	List
2"	763D-150		773D-150	
2-1/2"	763D-200		773D-200	
4"	763D-300		773D-300	

Coupler x Female NPT

ALUMINUM PTFE*		316 SS PTFE*	
Part #	List	Part #	List
762D-150		772D-150	
762D-200		772D-200	
762D-300		772D-300	

REPAIR KITS



	VITON*	
	Part #	List
2"	RK 150DV	
2-1/2"	RK 200DV	
4"	RK 300DV	

*VITON is a registered trademark of DuPont Dow Elastomer



	PTFE ENCAPSULATED	
	Part #	List
2"	RK 150DT	
2-1/2"	RK 200DT	
4"	RK 300DT	

ADAPTER - PARTS LIST

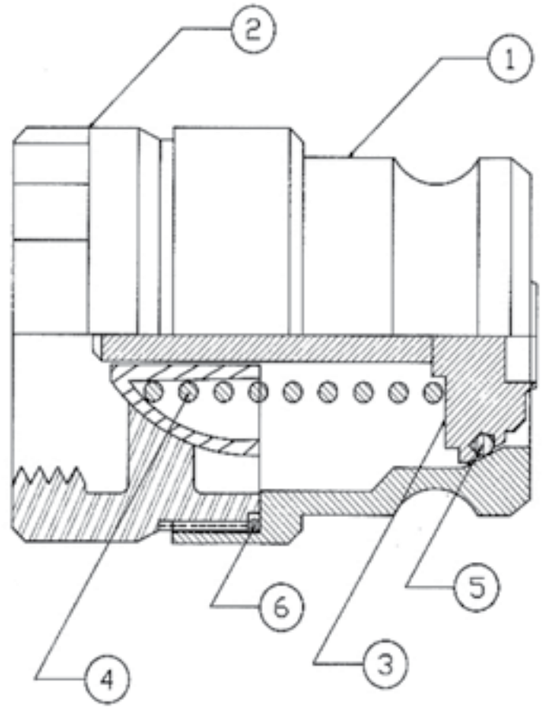

*VITON is a registered trademark of DuPont Dow Elastomer

SEAL FAST DRY- DISCONNECT COUPLING - PRODUCT NO.

Ref. No.	Description	Material	Qty	1-1/2" Adaptor	2" Adaptor	3" Adaptor
1	ADAPTER	ALUMINUM A356/T6	1	61501AL	62001AL	63001AL
		SS		61501SS	62001SS	63001SS
2	PIPE END	ALUMINUM A356/T6	1	61502AL	62002AL	63002AL
		SS		61502SS	62002SS	63002SS
3	DISC ASSY.	ALUMINUM A356/T6	1	61503AL	62003AL	63003AL
		SS		61503SS	62003SS	63003SS
4	SPRING	ALUMINUM A356/T6	1	61504ST	62004ST	63004ST
		SS		61504SS	62004SS	63004SS
*5	O-RING	*VITON	1	R1505V	R2005V	R3005V
		PTFE ENCAP. SILICONE		R1505T	R2005T	R3005T
*6	O-RING	*VITON	1	R1506V	R2006V	R3006V
		PTFE ENCAP. SILICONE		R1506T	R2006T	R3006T

SEAL FAST DRY- DISCONNECT COUPLING - PRODUCT NO. (ASSEMBLY)

Material/Seal	1-1/2" Adaptor	1-1/2" Coupler	2" Adaptor	2" Coupler	3" Adaptor	3" Coupler
ALUMINUM/*VITON	622A-150	762D-150	622A-200	762D-200	622A-300	762D-300
ALUMINUM/*TEFLON	623A-150	763D-150	623A-200	763D-200	623A-300	762D-300
STAINLESS/*VITON	672A-150	772D-150	672A-200	772D-200	672A-300	772D-300
STAINLESS/*TEFLON	673A-150	773D-150	673A-200	773D-200	673A-300	773D-300
*VITON	RK-150AV	RK-150DV	RK-200AV	RK-200DV	RK-300AV	RK-300DV
*TEFLON	RK-150AT	RK-150DT	RK-200AT	RK-200DT	RK-300AT	RK-300DT

*MARKS COMPONENTS OF REPAIR KIT

COUPLER - PARTS LIST

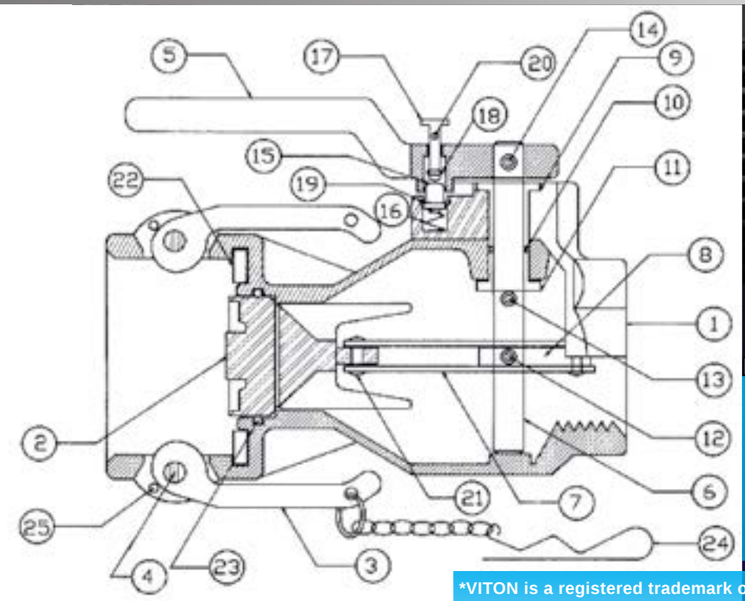

- *REPAIR KIT: (All Coupler repair kits include a punch)
- **LOCK REPAIR KIT:
  - Part# **RK1000** - 1-1/2" & 2" & Part# **RK1001** - 3" includes: Stud, Spring, Button, C-Ring & Hex Nut.

*VITON is a registered trademark of DuPont Dow Elastomer

PARTS LIST

Ref. No.	Description	Material	Qty	1-1/2" Coupler	2" Coupler	3" Coupler
1	BODY	ALUMINUM A356/T6	1	71501AL	72001AL	73001AL
---	---	SS	---	71501SS	72001SS	73001SS
2	POPPET	ALUMINUM A356/T6	1	71502AL	72002AL	73002AL
---	---	SS	---	71502SS	72002SS	73002SS
3	CAM ARM	SS	2	H200SK	H200SK	H300SK
4	CAM PIN	SS	2	P200SS	P200SS	P300SS
*5	HANDLE	SS	---	H1205SS	H1205SS	H3405SS
*6	SHAFT	SS	1	71206	71206	73006
*7	LINK	SS	2	71507	72007	73007
8	CAM	SS	1	71508	72008	73008
9	BUSHING	SS	1	71209	71209	73009
*10	O-RING	*VITON	---	R1210V	R1210V	R3010V
---	---	PTFE ENCAP. SILICONE	1	R1210T	R1210T	R3010T
11	RETAINER	SS	1	71211	71211	73411
*12	ROLL PIN	SS	1	P4022	P4022	P6032
*13	ROLL PIN	SS	1	P4022	P4022	P6032
14	PIN	SS	1	P4627	P4627	P4636
**15	STUD	SS	1	71215	71215	73015
**16	SPRING	SS	1	71216	71216	73016
**17	BUTTON	SS	1	71217	71217	73017
**18	C-RING	SS	1	71218	71218	73018
**19	HEX NUT	SS	1	71219	71219	73019
20	BUTTON HOLE		1	---	---	---
21	RIVET	SS	2	P4719	P4719	P6025
*22	GASKET	*VITON	---	200VI	250VI	400VI
---	---	TEFLON	---	200TFCAP	250TFCAP	400TFCAP
*23	O-RING	*VITON	---	R1523V	R2023V	R3023V
---	---	PTFE ENCAP. SILICONE	---	R1523T	R2023T	R3023T
24	SAFTEY PIN	STEEL PLATED	1	C1224ST	C1224ST	C3024ST
---	SAFETY CHAIN	SS	---	C1224SS	C1224SS	C3024SS
25	SAFETY PIN	HOLE	2	---	---	---

CORROSION RESISTANCE OF COUPLING MATERIALS

CAUTION: The following data has been compiled from generally available sources end should not be relied upon without consulting and following the specific recommendations of the manufacturer regarding particular coupling materials.

RATINGS: 1. Excellent 2. Good 3. Fair Conditional x. Not Satisfactory **NOTES:** No rationg indicates no data available

AGENT	Mall. From Steel	Brass	Bronze	Aluminum	Glass	Stainless 410, 416, 430	Stainless 302, 202, 304, 308	Stainless 316	Monel
Acetate, Solvents, Crude		3				2	1	1	2
Acetate, Solvents, Pure		1	1	1		1	1	1	1
Acetic Acid	X	X	X	2	1	X	2	2	2
Acetic Acid Vapor	X	X		3		X	2	2	3
Acetic Anhydride	X	X		2		X	2	2	2
Acetone	1	1	1	1	1	1	1	1	1
Acetylene	1	2		1		1	1	1	2
Alcohols	1	2		1		1	1	1	1
Aluminum Sulfate	X	3	3	3	1	X	3	2	2
Alums	X	3	2	3	1	X	3	2	2
Ammonia Gas	1	X	3	1	3	1	1	1	X
Ammonium Chloride	1	3		1*		3	3	1	1
Ammonium Hydroxide	2	X		2		1	1	1	3
Ammonium Nitrate	1	X		2		1	1	1	3
Ammonium Phosphate (Ammoniacal)		X				1	1	1	2
Ammonium Phosphate (Neutral)		3				1	1	1	2
Ammonium Phosphate (Acid)		3				3	2	1	2
Ammonium Sulfate	1	3				2	1	1	2
Asphalt	1	2				2	1	1	1
Beer	2	2	1	1		X	1	1	1
Beet SugarLiquors	1	2		1		2	1	1	1
Benzene, Benzol	1	1	1	1	1	1	1	1	1
Benzine (petroleum-naphtha)	1	1		1		1	1	1	1
Borax	2	2				1	1	1	1
Boric Acid	X	3		1		3	2	1	1
Butane, Butylene	1	1	1	1		1	1	1	1
Butadiene		1				1	1	1	1
Calcium Bisulfate		X				X	2	1	X
Calcium Hypochlorite	3	3	3	X	3	X	3	2	3
Cane Sugar Liquors	1	2		1		2	1	1	1
Carbon Dioxide (Dry)	1	1		1		1	1	1	1
Carbon Dioxide (Wet & Aqueous Sol)	2	3		2		2	1	1	2
Carbon Disulfide	2	3		2		2	1	1	3
Carbon Tetrachloride	3	1	2	3	1	1	1	1	1
Chlorine (Dry)	2	2	2	1	2	2	2	2	1
Chlorine (Wet)	X	X	3	X	2	X	X	3	3
Chromic Acid		X	X	X	1	3	2	2	3
Citric Acid	X	3		1		3	X	1	2
Coke Oven Gas	1	3		2		1	1	1	2
Copper Sulfate	X	X		X		1	1	1	3
Core Oils		1	1			1	1	1	1
Cottonseed Oil	1	1	1	1		1	1	1	1
Creosote	2	3		1		1	1	1	1
Ethers	2	1		1		1	1	1	1
Ethylene Glycol	2	2				1	1	1	1
Ferric Chloride	X	X	X	X	1	X	X	X	X
Ferric Sulfate	X	X		X		1	1	1	3
Formaldehyde	2	2		2		1	1	1	1

*3 to X at high temperatures. Chemical Chart is reprinted from 1996 RMA Hose Handbook

TECHNICAL DATA

CORROSION RESISTANCE OF COUPLING MATERIALS

CAUTION: The following data has been compiled from generally available sources end should not be relied upon without consulting and following the specific recommendations of the manufacturer regarding particular coupling materials.

RATINGS: 1. Excellent 2. Good 3. Fair Conditional x. Not Satisfactory **NOTES:** No rationg indicates no data available

AGENT	Mall. From Steel	Brass	Bronze	Aluminum	Glass	Stainless 410, 416, 430	Stainless 302, 202, 304, 308	Stainless 316	Monel
Formic Acid	X	2		X		X	2	1	2
Freon	3	1	1	1		1	1	1	1
Furfural	1	2		1		1	1	1	1
Gasoline (Sour)	3	3		3		3	1	1	X
Gasoline (Refined)	1	1	1	1		1	1	1	1
Gelatin	1	3		1		1	1	1	1
Glucose	1	1		1		1	1	1	1
Glue	1	3		1		1	1	1	1
Glycerine or Glycerol	1	2		1		1	1	1	1
Hydrochloric Acid	X	X	X	X	1	X	X	X	X
Hydrocyanic Acid	3	X		1		3	1	1	2
Hydrofluoric Acid	X	3	3	X	X	X	X	X	X
Hydrogen Fluoride		3				X	X	3	1
Hydrogen	1	1		1		1	1	1	1
Hyrogen Peroxide	X	X		1		1	2	1	2
Hydrogen Sulfide (Dry)	3	3		2		3	2	1	3
Hydrogen Sulfide (Wet)	3	3		2		3	2	1	3
Lacquers and Lacquer Solvents	3	2		1		1	1	1	1
Lactic Acid	X			3			3	2	1
Lime-Sulfur	2	X		2		1	1	2	
Linseed Oil	1	1		1			1	1	1
Magnesium Chloride	3	3		X		3	2	1	1
Magnesium Hydroxide	1	2		X		1	1	1	1
Magnesium Sulfate	2	2		3		1	1	1	1
Mercuric Chloride	3	X		X		X	X	3	X
Mercury	1	X		X		1	1	1	2
Milk	3	3		1		2	1	1	3
Molasses	2	X		2		2	1	1	1
Natural Gas	1	2		1		1	1	1	1
Nickel Chloride		X		X		X	3	2	2
Nickel Sulfate		3		X		3	2	1	1
Nitric Acid	X	X	X	3	1	2	2	2	X
Oleic Acid	2	3		1		2	2	1	1
Oxalic Acid	3	3		2		3	2	1	1
Oxygen	1	1	1	1		1	1	1	1
Palmitic Acid	1	3		1		2	2	1	1
Petroleum Oils (Sour)		3				3	1	1	X
Petroleum Oils (Refined)	1	1	1	1		1	1	1	1
Phosphoric Acid 25%	3	X		3	3	X	3	1	2
Phosphoric Acid 25-50%	X	X		X	3	X	X	2	2
Phosphoric Acid 50-85%	X	X		X	X	X	X	2	2
Picric Acid	3	X		3		2	1	1	X
Potassium Chloride	2	3		3		3	2	1	1
Potassium Hydroxide	3	X		X		1	1	1	1
Potassium Sulfate	2	2		1		1	1	1	1
Propane	1	1				1	1	1	1
Rosin (Dark)	1	2			1	1	1	1	1
Rosin (Light)		X		1		1	1	1	2

*3 to X at high temperatures. Chemical Chart is reprinted from 1996 RMA Hose Handbook

CORROSION RESISTANCE OF COUPLING MATERIALS

CAUTION: The following data has been compiled from generally available sources end should not be relied upon without consulting and following the specific recommendations of the manufacturer regarding particular coupling materials.

RATINGS: 1. Excellent 2. Good 3. Fair Conditional x. Not Satisfactory **NOTES:** No rationg indicates no data available

AGENT	Mall. From Steel	Brass	Bronze	Aluminum	Glass	Stainless 410, 416, 430	Stainless 302, 202, 304, 308	Stainless 316	Monel
Shellac		2		2		1	1	1	1
Sludge Acid		X				X	X	3	2
Soda Ash (Sodium Carbonate)	1	2		X		1	1	1	1
Sodium Bicarbonate	3	1		X		1	1	1	1
Sodium Bisulfate	X	3		3		X	1	1	1
Sodium Chloride	2	3	2	X	1	3	2	1	1
Sodium Cyanide	2	X		X		1	1	1	2
Sodium Hydroxide	3	X	3	X	X	2	2	2	1
Sodium Hypochlorite	X	X		X		X	3	2	3
Sodium Metaphosphate	X	3		1		2	1	1	1
Sodium Nitrate	1	3		1		1	1	1	1
Sodium Perborate	3	3		1		1	1	1	1
Sodium Peroxide	3	3		1		1	1	1	1
Sodium Phosphate (Alkaline)		3				1	1	1	1
Sodium Phosphate (Neutral)		2				1	1	1	1
Sodium Phosphate (Acid)		2				X	2	1	1
Sodium Silicate	1	3		X		1	1	1	1
Sodium Sulfate	1	2		3		1	1	1	1
Sodium Sulfide	1	X				1	1	1	2
Sodium Thiosulfate (Hypo)	3	X		X		1	1	1	2
Stearic Acid	3	3		3		2	2	1	1
Sulfate Liquors		X				1	1	1	2
Sulfur	2	X		2		2	2	1	3
Sulfur Chloride	X	X				X	3	2	2
Sulfur Dioxide (Dry)	2	1		1		1	1	1	1
Sulfur Dioxide (Wet)		X				X	2	1	X
Sulfuric Acid 10%	X	X	3	3		X	X	2	2
Sulfuric Acid 10-75%	X	X	X	X		X	X	X	2
Sulfuric Acid 75-95%	3	X	X	X		3	3	2	3
Sulfuric Acid 95%	2	X	X			2	2	2	X
Surlfurous Acid	X	X		X		X	3	2	X
Tannic Acid	3	3	1	X			1	1	1
Tar	1	2		1		2	1	1	1
Toluene, Toluol	1	1		1		1	1	1	1
Trichlorethylene	3	1		3		1	1	1	1
Turpentine		3		1		3	1	1	1
Varnish	2	2				1	1	1	1
Vegetable Oils	1	2		1		1	1	1	1
Vinegar	3	3		3		3	2	1	2
Water (Acid Mine Water)	3	X		3		2	1	1	3
Water (Fresh)	3	1		1		1	1	1	1
Water (Salt)	3	3	2	X		3	2	2	1
Whiskey	X	2				3	1	1	2
Wines	X	2				3	1	1	2
Xylene, Xylol	2	1		1		1	1	1	1
Zinc Chloride	X	X		X		3	2	1	1
Zinc Sulfate	3	3		3		3	2	1	1

*3 to X at high temperatures.

Chemical Chart is reprinted from 1996 RMA Hose Handbook

OIL & GASOLINE RESISTANCE

Rubber hose is used to convey petroleum products both in the crude and refined stages. The aromatic content of refined gasoline is often adjusted to control the octane rating. The presence of aromatic hydrocarbons in this fuel generally has a greater effect on rubber components than do aliphatic hydrocarbons. Aromatic materials in contact with rubber tend to soften it and reduce its physical properties. For long lasting service, the buyer of gasoline hose should inform the hose manufacturer of the aromatic content of the fuel to be handled so that the proper tube compound can be recommended for the specific application.

The effects of oil on rubber depend on a number of factors that include the type of rubber compound, the composition of the oil, the temperature and time of exposure. Rubber compounds can be classified as to their degree of oil resistance based on their physical properties after exposure to a standard test fluid. In this RMA classification, the rubber samples are immersed in IRM 903 oil at 100°C for 70 hours. (See ASTM Method D-471 for a detailed description of the oil and the testing procedure.) As a guide to the user of hose in contact with oil, the oil resistance classes and a corresponding description are listed.

PHYSICAL PROPERTIES AFTER EXPOSURE TO OIL:

		VOLUME CHANGE MAXIMUM	TENSILE STRENGTH RETAINED
CLASS A	(HIGH OIL RESISTANCE)……....	**+25%**	**80%**
CLASS B	(MEDIUM/HIGH OIL RESISTANCE)……....	**+65%**	**50%**
CLASS C	(MEDIUM OIL RESISTANCE)……....	**+100%**	**40%**

CHEMICAL RECOMMENDATIONS

The materials being handled by flexible rubber hose are constantly increasing in number and diversity. T o assist in the selection of the proper elastomer for the service conditions encountered, the following table has been prepared. The reader is cautioned that it is only a guide and should be used as such, as the degree of resistance of an elastomer with a particular fluid depends upon such variables as temperature, concentration, pressure, velocity of flow, duration of exposure, aeration, stability of the fluid, etc. Also variations in elastomer types and special compounding of stocks to meet specific service conditions have considerable influence on the results obtained. When in doubt, it is always advisable to test the tube compound under actual service conditions. If this is not practical, tests should be devised that simulate service condtions or the hose manufacturer contacted for Recommendations.

The following table lists the more commonly used materials, chemicals, solvents, oils, etc. The recommendation are based on room temperature and pressure conditions normally recommended for the particular type of hose being used. Where conditions beyond this can be met readily, they have been so indicated; where conditions are not normal and cannot be readily met, the hose manufacturer should always be consulted. The table does not imply conformance to the Food & Drug Administration requirements of Federal or State Laws when handling food products.

TABLE OF CHEMICAL, OIL & SOLVENT RESISTANCE OF HOSE:

WARNING: The following data has been compiled from generally available sources and should not be relied upon without consulting and following the hose manufacturer's specific chemical recommendations. Neglecting to do so might result in failure of the hose to fulfill its intended purpose, and may result in possible damage to property and serious bodily injury.

RESISTANCE RATING

A - Good Resistance, usually suitable for service.

F - Fair Resistance, the chemical has some deteriorative effects, but the elastomer is still adequate for moderate service.

C- Depends on Condition, moderate service may be possible if chemical exposure is limited or infrequent.

X- Not recommended, unsuitable for service.

I - Insufficient Information, not enough data available at the time of publication to determine rating.

RELASTOMERS/PLASTICS

NR- Natural Rubber
IR - Isoprene, synthetic
SBR - Styrene-butadiene
CR- Chloroprene
NBR - Nitrile-butadiene
IIR- Isobutene-isoprene
CSM - Chloro-sulfonyl-polyethylene
EPDM - Ethylene-propylene-diene-terpolymer
MQ - Dimethyl-polysiloxane
FKM- Fluoracarbon rubber
CM - Chloro-polyethylene
ECO/CO- Ephichlorohydrin
EXLPE- Chloro-sulfonyl-polyethylene

NOTES

NOTES