WINTERS Instruments



# PRODUCT CATALOG

www.winters.com

WINTERS INSTRUMENTS
MANUFACTURER OF INDUSTRIAL INSTRUMENTATION

# Why Winters

## WHY WINTERS

Customers are the heart of Winters Instruments, driving innovation and excellence in our pressure and temperature measurement solutions. Their trust and feedback inspire us to continuously improve our products and services, ensuring reliability and accuracy in every application. By prioritizing the needs of our customers, we build lasting partnerships that drive our success and growth.

- Matthew Smith, President






## PEOPLE

- Global distribution in over 90 countries through six Winters sales and service offices.
- Strong field support presence, with a large number of regional sales managers providing global coverage.
- Engineering team that responds to technical RFQs and provides application insights.
- Distributor training events that ensure our partners are fully equipped to promote, sell, and support our instrumentation products.
- Recognition as a winner of the “Canada’s Best Managed Companies”

## PRODUCTS

- High-quality products which are incredibly reliable.
- Numerous flagship brands, including StabiliZR®, WinSMART™, and WinAIR.
- Wide and deep product offering, allowing access to many new and different customers.
- Five-year warranty covering all instrumentation, that ensure our partners are fully equipped to promote, sell, and support our instrumentation products.



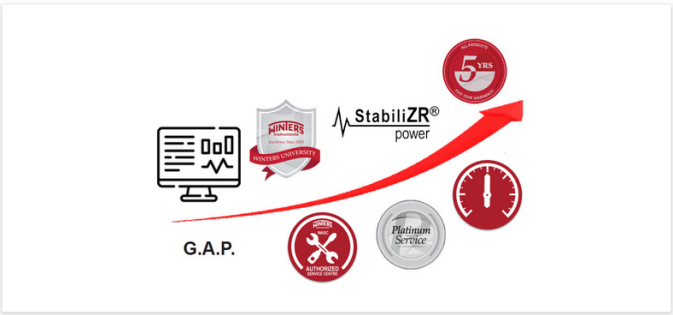


## INNOVATION

- Strong R&D, with numerous new product launches.
- Platinum Service
- Distributor portal, with all our Winters tools at your disposal.
- Many global approvals
- Serving all market segments, covering industrial, process and commercial projects.
- Global AMLs facilitating acceptance in projects.
- Third-party factory audits conducted by clients and organizations, verifying standards and certifications.


WINTERS
Instruments
StabiliZR®
0.0000
PSI
+00000

# Table of Contents


Project Highlights ..... 8
Warranty and Winters Platinum Service ..... 9
Repairs, Test Certificates And Services ..... 10
Custom Dials And Process Connections ..... 11
How to Order Guide ..... 12
Winters Approvals/Certifying Agencies ..... 398
Pressure Conversion Table ..... Inside Back Cover

*Selection Guides*
Pressure Gauges ..... 14
Thermometers ..... 153
Diaphraghm Seals ..... 217


## MECHANICAL

### PRESSURE


*Process Gauges*
**PPC** Process Gauge ..... 15
**PRC** Receiver Gauge ..... 18
**PSG** Schaeffer Gauge ..... 19
**PTR** Tamper Resistant Process Gauge ..... 21

*StabiliZR® Gauges*
**PEM-ZR** Economy StabiliZR® Gauge ..... 23
**PFP-ZR** Premium Stainless Steel StabiliZR® Gauge ..... 27
**PFQ-ZR** StabiliZR® Stainless Steel Gauge ..... 32
**PN2-ZR** NACE StabiliZR® Gauge - MR0175-2002 ..... 36
**PPC-ZR** StabiliZR® Process Gauge ..... 39

*Industrial Gauges*
**P1S** 100 Series Gauge ..... 43
**P3S** 300 Series Gauge ..... 47
**PBC** Forged Brass Case Gauge ..... 51
**PCC** Colour Coded Gauge ..... 54
**PCT/PCT-LF** Contractor/Lead Free Contractor Gauge ..... 56
**PFP** Premium Stainless Steel Liquid Filled Gauge ..... 58
**PFP** Premium Stainless Steel Liquid Filled Gauge for Panel Mounting ..... 65
**PFQ/PFQ-LF** Stainless Steel/Lead Free Stainless Steel Liquid Filled Gauge ..... 67
**PN2** NACE Liquid Filled Gauge - MR0175-2002 ..... 79
**PSC** Safety Case Gauge ..... 82
**PTG** Test Gauge ..... 85
**PTS** Tube Stub Gauge ..... 87
**PXT** Xmas Tree Gauge ..... 89

*Economy Gauges*
**P9S** 90 Series Gauge ..... 90
**P9U** 90 Series Panel Mounted Gauge ..... 94
**PEM/PEM-LF** Economy/Lead Free Economy Gauge ..... 98
**PEU** Economy Panel Mounted Gauge ..... 102

*Differential Gauges*
**PDT** Differential Gauge ..... 105
**PDX** Duplex Gauge ..... 107
**PFD** WinAIR Differential Gauge ..... 109
**PFD** WinAIR Compact Differential Gauge ..... 111
*High Static Pressure Differential Gauges*
**PPD** Piston Gauge ..... 113, 114
**PRD** Rolling Diaphragm Gauge ..... 113, 116
**PSD** Small Convoluted Diaphragm Gauge ..... 113, 117
**PVD** Convoluted Diaphragm Gauge ..... 113, 118

*Sanitary Gauges*
**PAG** 3A Premium Pharmaceutical & Sanitary Gauge ..... 119
**PSQ** 3A All-Purpose Quality Sanitary Gauge ..... 121

*Compressed Gas Gauges*
**PCG** Compressed Gas Gauge ..... 124
**PRL** Regulator Gauge ..... 126
**PSP** Spiral Tube Gauge ..... 128
**PWL** Welding Gauge ..... 130

*Special Application Gauges*
**PAM** Ammonia Gauge ..... 132
**PAL** Altitude Pressure Gauge ..... 136
**PFE** Sprinkler Gauge ..... 138
**PFG** Refrigeration Gauge ..... 139
**PLP** Low Pressure Gauge ..... 141

*Kits*
**PET/PET-LF** Economy Test/Lead Free Economy Test Gauge ..... 145
**PGTK** Gas Line Test Kit ..... 147
**PGWT** Low Pressure Gas and Water Test Kit ..... 148
**PLPT** Low Pressure Gas Test Kit ..... 149
**PLT** Low Pressure Test Kit ..... 150
**PTK** Pressure and Temperature Kit ..... 151

# Table of Contents

## TEMPERATURE


*Thermometers*

| | | |
|---|---|---|
| TAG | HVAC Gold Case Thermometer | 154 |
| TAS/TAS-LF | Industrial/Lead Free Industrial 5" Thermometer | 157 |
| TBM | Bi-Metal Thermometer | 159 |
| TBT | HVAC Bi-Metal Thermometer | 165 |
| TCT | Clamp-On Thermometer | 167 |
| THR | HVAC Remote Reading Thermometer | 168 |
| THS | Solar Digital Bi-Metal Thermometer | 170 |
| TIM/TIM-LF | Industrial/Lead Free Industrial 9" Thermometer | 171 |
| TMT | Surface Magnet Thermometer | 173 |
| TNR | Food & Beverage Bi-Metal Thermometer | 174 |
| TRR | Gas or Vapour Remote Reading Thermometer | 175 |
| TSD | Industrial Solar Digital Thermometer | 181 |
| TSW/TSW-LF | Hot Water/Lead Free Hot Water Thermometer | 183 |
| TTD | Tridicator | 186 |

*Thermowells*

| | | |
|---|---|---|
| TBR | Bi-Metal Threaded Thermowell | 188 |
| TDF | Duct Flange | 194 |
| TIW/TIW-LF | Industrial/Lead Free Industrial Thermowell | 195 |
| TSN | Sanitary Thermowell | 198 |
| TST | Tridicator Shut-off Thermowell | 199 |
| TWF | Flanged Threaded Thermowell | 200 |
| TWS | Socket Weld Bi-Metal Thermowell | 203 |
| TWW | Weld-In Threaded Thermowell | 204 |


## ACCESSORIES


| | | |
|---|---|---|
| FIR | Isolation Ring Tees | 205 |
| SAS | Adjustable Snubber | 206 |
| SCT | Cooling Tower | 208 |
| SOP | Over Pressure Protector | 210 |
| SSN/SSN-LF | Snubber/Lead Free Snubber | 212 |
| SSP | Syphon | 214 |
| STP/STP-LF | Test Plug/Lead Free Test Plug | 216 |

*Diaphragm Seals*

| | | |
|---|---|---|
| D10 | PVC 2-Piece Seal | 218 |
| D15 | Threaded Flush Mount Seal | 219 |
| D20 | Sanitary Seal | 220 |
| D30 | High Pressure Seal | 221 |
| D40 | Medium Duty Seal | 222 |
| D44 | Flanged Seal | 224 |
| D44 | Flanged Seal All Welded | 226 |
| D46 | Flanged Flush Mount Seal | 230 |
| D70 | Heavy Duty 2-Piece Industrial Seal | 233 |
| D71 | NACE 2-Piece Seal | 236 |
| D81 | Isolation Ring | 238 |
| D85 | In Line Flow Thru Seal | 240 |
| D90 | Saddle Weld Seal | 241 |

*Manifolds*

| | | |
|---|---|---|
| MVA | 2-Handle Manifold | 243 |
| MVA | 3-Handle Manifold | 244 |
| MVA | 3-Handle Direct Mount Manifold | 245 |
| MVA | 3 and 5-Handle Manifolds | 246 |
| MVA | 5-Handle Manifold | 247 |
| MVA | 5-Handle Direct Mount Manifold | 248 |

*Valves*

| | | |
|---|---|---|
| NVA | Needle Valve (Straight Body, Hard Seat) | 249 |
| NVA | Needle Valve (Angle Body, Hard Seat) | 251 |
| NVA | Needle Valve (Straight Body, Soft Seat) | 253 |
| NVA | Needle Valve (Multiport) | 254 |
| BBV | Block & Bleed Valve Single Handle | 256 |
| BBV | Block & Bleed Valve Two Handles | 259 |
| BBV | Double Block & Bleed Valve | 260 |
| SNV/SNV-LF | Needle Valve/Lead Free Needle Valve | 262 |
| SMV/SMV-LF | Mini Ball Valve/Lead Free Mini Ball Valve | 263 |

# ELECTRONIC

## PRESSURE


| | | |
|---|---|---|
| *Pressure Switches* | PEC | Premium Stainless Steel Gauge With Electrical Contacts ..... 265 |
| | 1WPS | 1WPS Compact Pressure Switch ..... 267 |
| | 2WPS | General Purpose & Adjustable Deadband Pressure Switch ..... 269 |
| | 3WPS | Vacuum & Low Pressure Switch ..... 272 |
| | 4WPS | Medium Pressure & Adjustable Deadband Pressure Switch ..... 274 |
| | 6WPS | Explosion Proof & Adjustable Deadband Pressure Switch ..... 277 |
| | 7WPS | Medium Pressure, Explosion Proof & Adjustable Deadband Pressure Switch ..... 280 |
| | 8WPS | Vacuum & Low Pressure Pressure Switch ..... 283 |
| | 9WPS | Explosion Proof Compact Pressure Switch ..... 286 |
| *Differential Pressure Switches* | WPS | WPS Commercial Differential Pressure Switch ..... 289 |
| | 5WPS | Differential Pressure Switch ..... 291 |
| | 10WPS | Explosion Proof Differential Pressure Switch ..... 293 |
| *Digital Pressure Gauges* | DPG | Digital Pressure Gauge ..... 296 |
| | DPG+ | High Precision Digital Pressure Gauge ..... 297 |
| *Pressure Transmitters* | LE1 | OEM Transmitter ..... 299 |
| | LE3 | General Purpose Transmitter ..... 301 |
| | LIM | Aggressive Media Transmitter ..... 304 |
| | LM1 | Anti-Clogging Submersible Transmitter ..... 308 |
| | LM6 | All Stainless Steel Submersible Transmitter ..... 309 |
| | LM7 | General Purpose Submersible Transmitter ..... 311 |
| | LMH | Hydraulic Transmitter ..... 313 |
| | LST | Sanitary Transmitter ..... 316 |
| | LTF | Flush Mount Transmitter ..... 319 |
| | LXP | Explosion Proof Transmitter ..... 322 |
| | LY14 | **WinSMART™** Smart Pressure Transmitter ..... 325 |
| | LY16 | **WinSMART™** Smart Explosion Proof Pressure Transmitter ..... 328 |
| *Differential Pressure Transmitters* | LTD | Differential Transmitter ..... 331 |
| | LY34 | **WinSMART™** Smart Differential Pressure Transmitter ..... 334 |
| | LY36 | **WinSMART™** Smart Explosion Proof Differential Pressure Transmitter ..... 337 |
| | LFA | **WinTRONIQ** Low Pressure Transmitter ..... 342 |
| | LFD | **WinTRONIQ** Low Pressure Digital Differential Gauge With Transmitter Output ..... 344 |


## TEMPERATURE


| | | |
|---|---|---|
| *Smart Temperature Transmitters* | TY52 | **WinSMART™** Smart Explosion Proof Temperature Transmitter ..... 346 |
| *RTDs and Thermocouples* | TER | Industrial RTD ..... 351 |
| | TET | Industrial Thermocouple ..... 353 |
| *Commercial Temperature* | WT1/WR1 | **WinTRONIQ** Indoor Temperature Sensor With Transmitter Output ..... 356 |
| | WT2/WR2 | **WinTRONIQ** Ventilation Temperature Senosrs With Transmitter Output ..... 358 |
| | WT5/WR5 | **WinTRONIQ** Outdoor Temperature Sensors With Temperature Output ..... 360 |


## HUMIDITY


| | | |
|---|---|---|
| *Occupied* | WRH1/WTH1 | **WinTRONIQ** Indoor Temperature And Humidity Sensors And Transmitters ..... 362 |
| | WRH5/WTH5 | **WinTRONIQ** Outdoor Temperature And Humidity Sensors And Transmitters ..... 365 |
| | WTH5F2 | **WinTRONIQ** Louvered Outdoor Temperature And Humidity Sensor And Transmitters ..... 368 |
| *Unoccupied* | WRH2/WTH2 | **WinTRONIQ** Duct Type Temperature And Humidity Sensors and Transmitters ..... 370 |

# Table Of Contents

## ENVIRONMENTAL SENSORS


| | | |
|---|---|---|
| *Air Quality Sensors* | **WPM2** | **WinTRONIQ** Indoor And Ventilation Air Quality Sensors With Transmitter Output ..... 373 |
| | **WCES** | **WinTRONIQ** All-In-One Air Quality Sensor ..... 375 |
| *Water Detection* | **LPDA1** | **WinTRONIQ** Water Leak Detection Non-Location Type ..... 377 |
| | **LPDA2** | **WinTRONIQ** Water Leak Detection Sensor Position Type ..... 379 |
| *Gas Detection* | **WCO1** | **WinTRONIQ** Indoor and Ventilation Carbon Monoxide Transmitter ..... 381 |
| | **WCO2** | **WinTRONIQ** Indoor and Ventilation Carbon Dioxide Transmitter ..... 383 |
| | **WNO2** | **WinTRONIQ** Nitrogen Dioxide (NO2) Gas Detector ..... 385 |
| *Air Flow Transmitters* | **WPCM** | **WinTRONIQ** Air flow and Velocity Transmitter ..... 389 |
| *Refrigeration Leak Detectors* | **WR Series** | **WinTRONIQ** Refrigeration Leak Detector ..... 393 |
| *Electromagnetic Flow Meters* | **LMF11** | **WinTRONIQ** Electromagnetic Flow Meter ..... 395 |
| | **LMF12** | **WinTRONIQ** Electromagnetic Flow Meter ..... 402 |

# Project Highlights

*Specified, Installed and Trusted - We're There*

## Aerospace & Transport

| | |
|---|---|
| Air Canada | Canada |
| Canadian National Railway | Canada |
| US Air Force | USA |

## Automotive

| | |
|---|---|
| Chrysler | Canada |
| General Motors (Paint Plant) | Canada |
| Hainan Automobile Group | China |
| Honda | Canada |
| Nissan | USA |
| Toyota | USA/Canada |

## Food & Beverage / Pharmaceutical

| | |
|---|---|
| Catalent Pharma Solutions | USA |
| Coca-Cola | Puerto Rico |
| Heinz | Canada |
| Kellogg's | Canada |

## Government

| | |
|---|---|
| Department of Defence | Canada |
| US Coast Guard | USA |
| US Defense Department | USA |
| US Navy | USA |

## HVAC

| | |
|---|---|
| American University of Beirut | Lebanon |
| BCE Place | Canada |
| Burj Khalifa | UAE |
| Palm Jumairah | UAE |
| Pearl Qatar | Qatar |
| Princess Noura University | Saudi Arabia |

## Industrial

| | |
|---|---|
| DuPont | USA |
| Jordan Bomine Plant | Jordan |

## Mining

| | |
|---|---|
| Diavik Diamond Mine | Canada |
| Peñaquito Polymetallic Mine | Mexico |
| Teck Cominco | Canada |

## Oil & Gas

| | |
|---|---|
| Devon Energy | Canada |
| Devon (Jackfish) | Canada |
| Saudi Aramco | Saudi Arabia |
| Shell Oil (Motiva) | USA |
| Suncor Energy | Canada |
| Suncor (Millennium) | Canada |

## Petrochemical

| | |
|---|---|
| Fushun Petrochemical Company | China |
| Irving Oil Refinery | Canada |
| Nanjing DSM Petrochemical | China |
| Sinopec | China |

## Power Generation

| | |
|---|---|
| Dayawan Nuclear Power Plant | China |
| Georgia Power | USA |
| Jebel Ali Power Station | UAE |
| Ontario Hydro | Canada |
| Ras Abu Fontas Power and Desalination | Qatar |
| Takoradi Thermal Power Station | Ghana |
| Wasit Power Station | UAE |
| Williams Energy Refinery | Canada |

## Pulp & Paper

| | |
|---|---|
| Harmack & Neucel | Canada |
| Irving Paper | Canada |
| Tembec | Canada |

## Water / Waste Water Treatment

| | |
|---|---|
| Ashbridges Bay | Canada |
| Capital Region | Canada |
| Chelmsford, MA Water Treatment Plant | USA |
| Dallas Water Treatment Plant | USA |
| Hartford Dist. Water Pollution Control Facility | USA |
| SEWA Sarjah | UAE |

## 5-Year Warranty

A 5-year warranty applies to all instrumentation and instrumentation accessories.




Winters Instruments' products are warranted for a stated period of time (see above) after date of purchase against manufacturing and materials defects. Any product which is found by Winters to be defective will be replaced at Winters' discretion. Winters' product warranty does not cover product defects resulting from improper product selection, misuse or misapplication except as specifically set forth in this warranty. Winters Instruments makes no representation or Warranty of any kind, whether expressed or implied, to Purchaser or any other person with respect to any of the products. Without limiting the generality of the preceding sentence,
winters instruments disclaims the implied Warranties of merchantability and fitness for a particular purpose. Any liability from Winters to Purchaser or any other person or entity pursuant to this Warranty, whether for a claim in tort, for breach of contract or otherwise, shall not exceed the purchase price of the Product giving rise to such
liability. Winters shall in no event have any liability to Purchaser or any other
person or entity for any consequential, indirect, punitive or special damages
(including, without limitation, lost profits) pursuant to this Warranty or pursuant to its sale of the Products, even if the possibility of such damages could have been foreseen by Winters Instruments.

## Winters Platinum Service




An expedited service that moves orders to the front of the line.

Both manufacturing and service orders will be expedited through our system. Orders manufactured in North America will be completed within **48 hours** and non-North American manufactured orders will be completed within **two weeks**.

Platinum Service applies to most products. Contact Winters or a Winters distributor for more details.

Winters Platinum Service is available for new and existing orders. All Platinum Service orders must be approved by a Winters representative prior to a purchase order being issued (as order size and parts availability may preclude an order from Platinum Service). Purchase orders issued more than 3 weeks after original quote may no longer qualify for Platinum Service. Changes made to Platinum Service orders already placed may void the service. If a Platinum Service order is not shipped in the time quoted the premium fee may be waived by Winters. Freight is not included.

# Repairs, Test Certificates And Services



## *Repairs*

**Features:**

- Full repair service for pressure & temperature instruments and diaphragm seals
- Non-Winters products can also be repaired

**Applications:**

- Where cost savings justify repairing rather than replacing

**How to order:**

Please contact our customer service department for your repair order code. Send in your product (freight prepaid) to your nearest Winters location. A written estimate will be faxed or emailed to you before any work is done.

## *Test Certificates*

**Features:**

- Winters will certify the accuracy of a pressure gauge, thermometer or pressure switch with a National Standards Council test certificate
- Certificates are traceable to the National Institute of Standards and Technology (NIST)
- Certificates may be registered online for renewal reminders

**Applications:**

- Where a formal test certificate is required
- For certification with the ISO 9000 process

**How to order:**

Please contact our customer service department for your order code.

**Services:**

+ added at the end of very part number

| | | | | |
|---|---|---|---|---|
| OXYGEN CLEANING | O | X | Y | |
| MATERIAL TEST REPORT 3.1 (TYPICAL) | M | T | R | 1 |
| MATERIAL TEST REPORT 3.2 | M | T | R | 2 |
| TAG, PAPER | T | A | G | 1 |
| TAG, 304SS | T | A | G | 2 |
| TAG, 316SS | T | A | G | 3 |
| CALIBRATION TEST CERTIFICATE | T | C | | |
| CERTIFICATE OF ORIGIN | C | O | O | |
| CERTIFICATE OF COMPLIANCE | C | O | C | |
| CERTIFIED DRAWING | D | W | G | |
| HYDROSTATIC TEST CERTIFICATE | H | T | C | |
| WAVE FREQUENCY CALCULATION | W | F | C | |
| POSITIVE MATERIAL IDENTIFICATION (PMI) | P | M | I | |

# Custom Dials And Process Connections

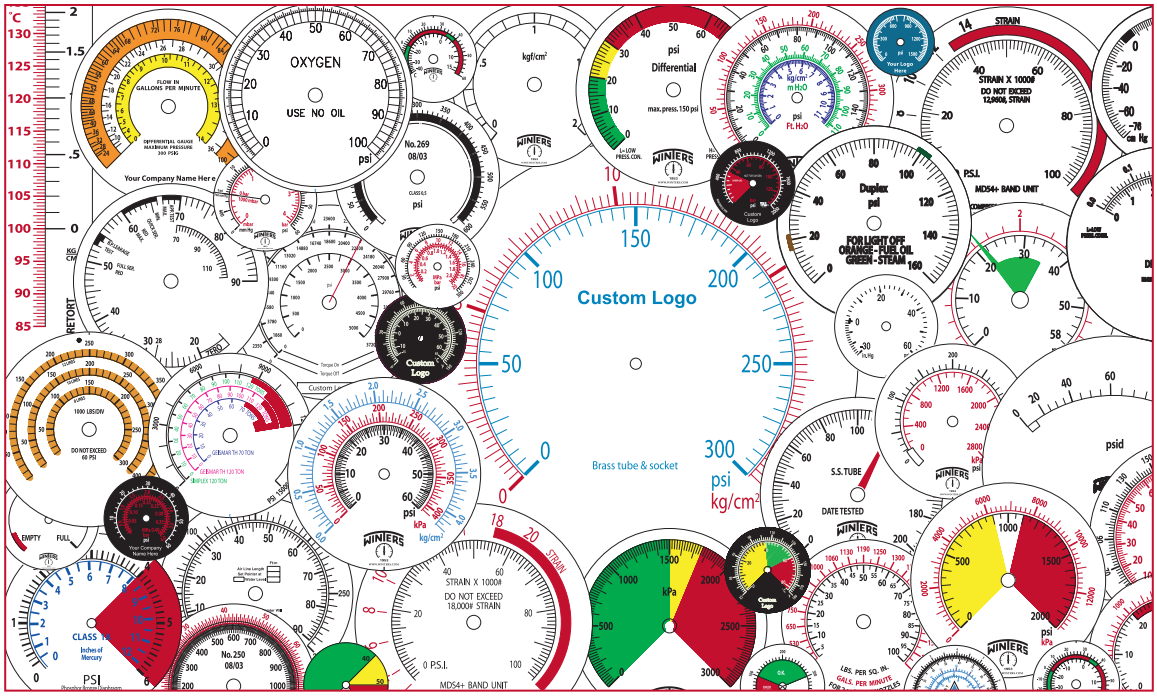


## Customize Your Instrumentation

- Available for all makes and models of pressure and temperature instrumentation
- All colours are available
- All dials are custom manufactured to meet your specifications
- Available on new or repaired instruments
- Available for dry or liquid-filled instruments
- Emergency same-day custom dial manufacturing is available

## Applicable to OEM Requirements

- Where easy-to-read, highly visible warning zones are required
- Non-standard custom measurement scales
- Replacement of damaged or outdated dials
- For time-sensitive dial requirements

## WinBRIGHT Dials (Available on PFP, PFP-ZR, PPC, PPC-ZR Series Gauges):

- WBYG option for the reflective, fluorescent yellow-green dial
- WBY option for the reflective, fluorescent yellow dial
- WBFY option for the fluorescent yellow dial
- WBO option for the reflective orange dial
- WBW option for the reflective white dial
- WBG option for the glow-in-the-dark white dial

## Thread Codes

T1 = BSP(G)
T2 = BSPT(R)

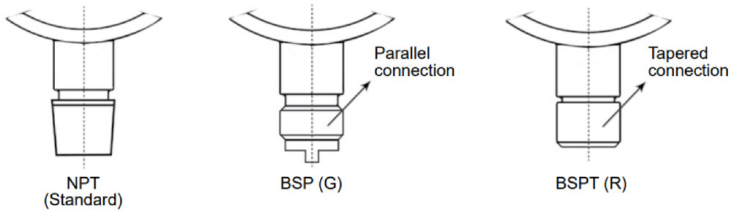

## PRESSURE GAUGE SCALE & RANGE, LIST MAJOR SCALE 1ST & MINOR SCALE 2ND

| | | | | | | | | | | | |
|---|---|---|---|---|---|---|---|---|---|---|---|
| 15"/0 HG | P1 | 0/15" H2O/VAC | H1 | 0/600 MMH20 | J1 | -0.6/0 BAR | B1 | -200/0/200 MBAR | D1 | -1/0/5 KG/CM(2) | C8 |
| 30"/0 HG | P2 | 0/32" H2O/VAC | H2 | 0/1,000 MMH20 | J2 | -1/0 BAR | B2 | -200/0/250 MBAR | D2 | -1/0/7 KG/CM(2) | C9 |
| 30"/0/15 PSI | P3 | 0/55" H2O/VAC | H3 | 0/1,600 MMH20 | J3 | -1/0/0.6 BAR | B3 | -200/0/300 MBAR | D3 | -1/0/9 KG/CM(2) | C10 |
| 30"/0/25 PSI | P4 | 0/100" H2O/VAC | H4 | 0/2,000 MMH20 | J4 | -1/0/1 BAR | B4 | -250/0/250 MBAR | D4 | -1/0/10 KG/CM(2) | C11 |
| 30"/0/30 PSI | P5 | 0/200" H2O/VAC | H5 | 0/2,500 MMH20 | J5 | -1/01.5 BAR | B5 | -300/0/300 MBAR | D5 | -1/0/11 KG/CM(2) | C12 |
| 30"/0/40 PSI | P6 | 0/5" H2O/OZ | H6 | 0/4,000 MMH20 | J6 | -1/0/2 BAR | B6 | -400/0/400 MBAR | D6 | -1/0/14 KG/CM(2) | C13 |
| 30"/0/60 PSI | P7 | 0/10" H2O/OZ | H7 | 0/6,000 MMH20 | J7 | -1/0/3 BAR | B7 | -500/0/500 MBAR | D7 | -1/0/15 KG/CM(2) | C14 |
| 30"/0/70 PSI | P8 | 0/15" H2O/OZ | H8 | 0/10,000 MMH20 | J8 | -1/0/4 BAR | B8 | 0/1 MBAR | D8 | -1/0/20 KG/CM(2) | C15 |
| 30"/0/100 PSI | P9 | 0/30" H2O/OZ | H9 | | | -1/0/5 BAR | B9 | 0/1.6 MBAR | D9 | -1/0/24 KG/CM(2) | C16 |
| 30"/0/150 PSI | P10 | 0/32" H2O/OZ | H10 | | | -1/0/7 BAR | B10 | 0/2 MBAR | D10 | 0/1 KG/CM(2) | C17 |
| 30"/0/200 PSI | P11 | 0/55" H2O/OZ | H11 | | | -1/0/9 BAR | B11 | 0/2.5 MBAR | D11 | 0/1.6 KG/CM(2) | C18 |
| 30"/0/220 PSI | P12 | 0/60" H2O/OZ | H12 | -100/0 KPA | K1 | -1/0/10 BAR | B12 | 0/4 MBAR | D12 | 0/2 KG/CM(2) | C19 |
| 30"/0/300 PSI | P13 | 0/100" H2O/OZ | H13 | -100/0/60 KPA | K2 | -1/0/11 BAR | B13 | 0/6 MBAR | D13 | 0/2.5 KG/CM(2) | C20 |
| 30"/0/350 PSI | P14 | 0/160" H20/OZ | H14 | -100/0/100 KPA | K24 | -1/0/14 BAR | B14 | 0/7 MBAR | D14 | 0/4 KG/CM(2) | C21 |
| 0/5 PSI | P15 | 0/200" H20/OZ | H15 | -100/0/150 KPA | K3 | -1/0/15 BAR | B15 | 0/10 MBAR | D15 | 0/6 KG/CM(2) | C22 |
| 0/8 PSI | P16 | 0/300" H20/OZ | H16 | -100/0/200 KPA | K25 | -1/0/20 BAR | B16 | 0/11 MBAR | D16 | 0/7 KG/CM(2) | C23 |
| 0/10 PSI | P17 | 0/400" H20/OZ | H17 | -100/0/300 KPA | K4 | 1/0/24 BAR | B17 | 0/14 MBAR | D17 | 0/10 KG/CM(2) | C24 |
| 0/15 PSI | P18 | 0/5 PSI/KPA | H18 | -100/0/400 KPA | K26 | 0/0.6 BAR | B18 | 0/16 MBAR | D18 | 0/11 KG/CM(2) | C25 |
| 0/25 PSI | P19 | 0/8 PSI/KPA | H19 | -100/0/500 KPA | K5 | 0/1 BAR | B19 | 0/17 MBAR | D19 | 0/14 KG/CM(2) | C26 |
| 0/30 PSI | P20 | 0/10 PSI/KPA | H20 | -100/0/700 KPA | K27 | 0/1.6 BAR | B20 | 0/20 MBAR | D20 | 0/16 KG/CM(2) | C27 |
| 0/60 PSI | P21 | | | -100/0/900 KPA | K6 | 0/2 BAR | B21 | 0/25 MBAR | D21 | 0/17 KG/CM(2) | C28 |
| 0/90 PSI | P22 | | | -100/0/1,100 KPA | K28 | 0/2.5 BAR | B22 | 0/28 MBAR | D22 | 0/20 KG/CM(2) | C29 |
| 0/100 PSI | P23 | | | -100/0/1,400 KPA | K29 | 0/4 BAR | B23 | 0/40 MBAR | D23 | 0/25 KG/CM(2) | C30 |
| 0/160 PSI | P24 | | | -100/0/1,500 KPA | K7 | 0/6 BAR | B24 | 0/60 MBAR | D24 | 0/28 KG/CM(2) | C31 |
| 0/200 PSI | P25 | | | -100/0/2,000 KPA | K29 | 0/7 BAR | B25 | 0/70 MBAR | D25 | 0/40 KG/CM(2) | C32 |
| 0/230 PSI | P26 | -0.1/0 MPA | M1 | -100/0/2,400 KPA | K8 | 0/10 BAR | B26 | 0/100 MBAR | D26 | 0/60 KG/CM(2) | C33 |
| 0/250 PSI | P27 | -0.1/0/0.6 MPA | M2 | 0/100 KPA | K9 | 0/14 BAR | B27 | 0/140 MBAR | D27 | 0/70 KG/CM(2) | C34 |
| 0/300 PSI | P28 | -0.1/0/0.15 MPA | M3 | 0/160 KPA | K10 | 0/16 BAR | B28 | 0/160 MBAR | D28 | 0/100 KG/CM(2) | C35 |
| 0/370 PSI | P29 | -0.1/0/0.3 MPA | M4 | 0/200 KPA | K30 | 0/17 BAR | B29 | 0/200 MBAR | D29 | 0/140 KG/CM(2) | C36 |
| 0/400 PSI | P30 | -0.1/0/0.5 MPA | M5 | 0/250 KPA | K11 | 0/20 BAR | B30 | 0/250 MBAR | D30 | 0/160 KG/CM(2) | C37 |
| 0/600 PSI | P31 | -0.1/0/0.9 MPA | M6 | 0/400 KPA | K12 | 0/25 BAR | B31 | 0/280 MBAR | D31 | 0/200 KG/CM(2) | C38 |
| 0/800 PSI | P32 | -0.1/0/1.5 MPA | M7 | 0/600 KPA | K13 | 0/28 BAR | B32 | 0/350 MBAR | D32 | 0/250 KG/CM(2) | C39 |
| 0/900 PSI | P33 | -0.1/0/2.4 MPA | M8 | 0/700 KPA | K23 | 0/40 BAR | B33 | 0/400 MBAR | D33 | 0/280 KG/CM(2) | C40 |
| 0/1,000 PSI | P34 | 0/0.1 MPA | M9 | 0/1,000 KPA | K14 | 0/60 BAR | B34 | 0/500 MBAR | D34 | 0/350 KG/CM(2) | C41 |
| 0/1,500 PSI | P35 | 0/0.16 MPA | M10 | 0/1,100 KPA | K31 | 0/70 BAR | B35 | 0/600 MBAR | D35 | 0/400 KG/CM(2) | C42 |
| 0/2,000 PSI | P36 | 0/0.25 MPA | M11 | 0/1,400 KPA | K32 | 0/100 BAR | B36 | 0/700 MBAR | D36 | 0/500 KG/CM(2) | C43 |
| 0/2,300 PSI | P37 | 0/0.4 MPA | M12 | 0/1,600 KPA | K15 | 0/140 BAR | B37 | 0/1,000 MBAR | D37 | 0/600 KG/CM(2) | C44 |
| 0/3,000 PSI | P38 | 0/0.6 MPA | M13 | 0/2,000 KPA | K33 | 0/160 BAR | B38 | 0/1,400 MBAR | D38 | 0/1,000 KG/CM(2) | C45 |
| 0/3,600 PSI | P39 | 0/1 MPA | M14 | 0/2,500 KPA | K16 | 0/200 BAR | B39 | 0/1,600 MBAR | D39 | 0/1,400 KG/CM(2) | C46 |
| 0/4,000 PSI | P40 | 0/1.6 MPA | M15 | 0/2,800 KPA | K34 | 0/250 BAR | B40 | 0/1,750 MBAR | D40 | 0/1,600 KG/CM(2) | C47 |
| 0/5,000 PSI | P41 | 0/2.5 MPA | M16 | 0/4,000 KPA | K17 | 0/280 BAR | B41 | 0/2,100 MBAR | D41 | 0/1,750 KG/CM(2) | C48 |
| 0/6,000 PSI | P42 | 0/4 MPA | M17 | 0/5,500 KPA | K35 | 0/350 BAR | B42 | 0/2,400 MBAR | D42 | 0/2,100 KG/CM(2) | C49 |
| 0/7,500 PSI | P43 | 0/6 MPA | M18 | 0/6,000 KPA | K18 | 0/400 BAR | B43 | 0/2,500 MBAR | D43 | 0/2,400 KG/CM(2) | C50 |
| 0/8,000 PSI | P44 | 0/10 MPA | M19 | 0/7,000 KPA | K19 | 0/500 BAR | B44 | 0/2,800 MBAR | D44 | 0/2,500 KG/CM(2) | C51 |
| 0/9,000 PSI | P45 | 0/16 MPA | M20 | 0/8,000 KPA | K20 | 0/600 BAR | B45 | | | 0/2,800 KG/CM(2) | C52 |
| 0/10,000 PSI | P46 | 0/25 MPA | M21 | 0/10,000 KPA | K21 | 0/700 BAR | B46 | | | | |
| 0/15,000 PSI | P47 | 0/40 MPA | M22 | 0/14,000 KPA | K36 | 0/1,000 BAR | B47 | | | | |
| 0/20,000 PSI | P48 | 0/60 MPA | M23 | 0/15,000 KPA | K22 | 0/1,400 BAR | B48 | | | | |
| 0/24,000 PSI | P49 | 0/100 MPA | M24 | 0/20,000 KPA | K37 | 0/1,600 BAR | B49 | | | | |
| 0/25,000 PSI | P50 | | | 0/35,000 KPA | K38 | 0/1,700 BAR | B50 | | | | |
| 0/30,000 PSI | P51 | | | 0/40,000 KPA | K39 | 0/2,100 BAR | B51 | | | | |
| 0/35,000 PSI | P52 | | | 0/70,000 KPA | K40 | 0/2,400 BAR | B52 | | | | |
| 0/36,000 PSI | P53 | | | 0/100,000 KPA | K41 | 0/2,500 BAR | B53 | | | | |
| 0/40,000 PSI | P54 | | | 0/140,000 KPA | K42 | 0/2,800 BAR | B54 | | | | |

**Scale Codes**

| | |
|---|---|
| R1 = psi | R10 = atmosphere |
| R2 = kPa | R11 = bar |
| R3 = kgcm² | R12 = mbar |
| R4 = cm of $H_2O$ | R13 = MPa |
| R5 = ft of $H_2O$ | R14 = m$H_2O$ |
| R6 = in of Hg | R15 = mm$H_2O$ |
| R7 = mm of Hg | R16 = Pa |
| R8 = in of $H_2O$ | R17 = cm of Hg |
| R9 = oz/in² | |

# MECHANICAL

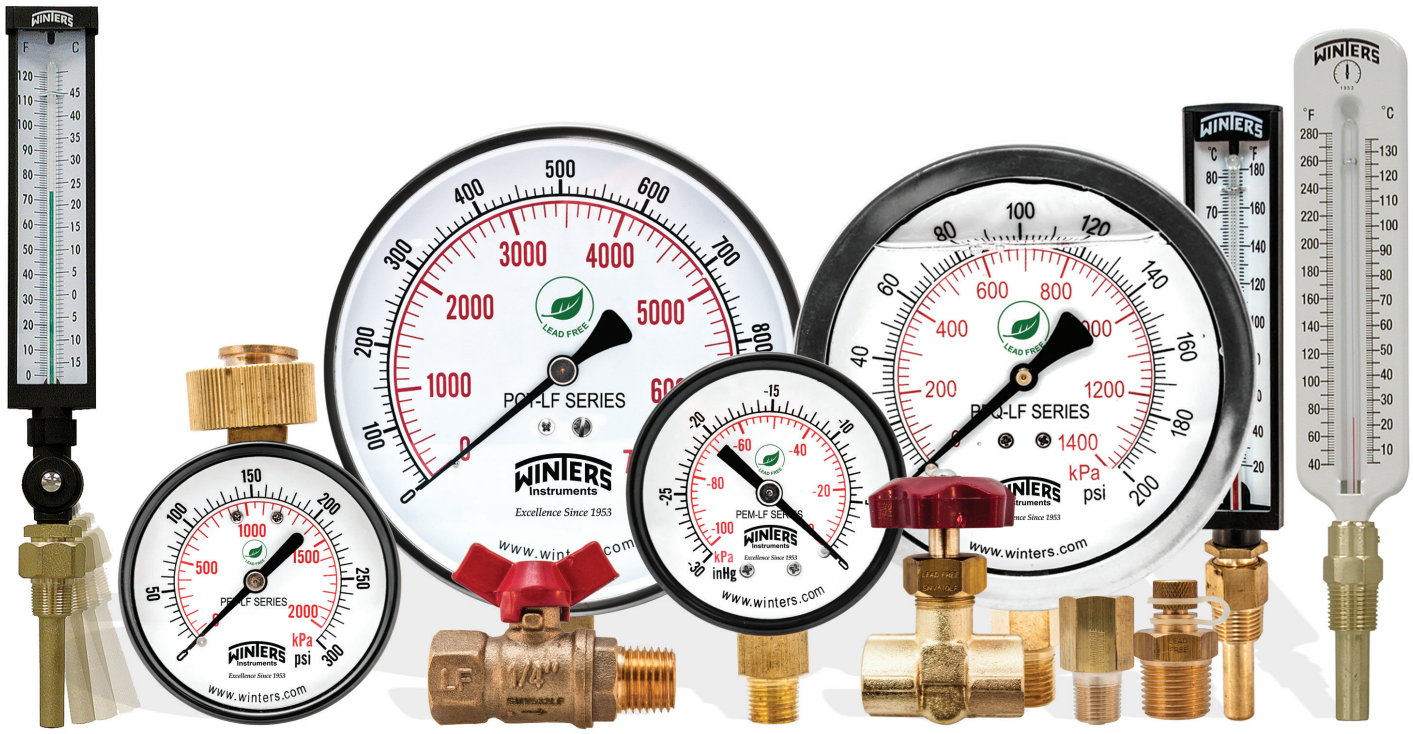
WINTERS
Instruments
Excellence Since 1953
LEAD FREE
PGT-LF SERIES
PGQ-LF SERIES
PEM-LF SERIES
PET-LF SERIES
kPa
psi
inHg
www.winters.com

# Pressure Gauge Selection Guide

| Catalogue Page | Series | Dial Size | | | | | | | | | Ranges (Pressure) | | | | | | | | Case Material | | | | | | | Wetted Parts | | | | | | Connection Size | | | | | | Connection Location | | | Accuracy | | | | | | | |
|---|---|---|---|---|---|---|---|---|---|---|---|---|---|---|---|---|---|---|---|---|---|---|---|---|---|---|---|---|---|---|---|---|---|---|---|---|---|---|---|---|---|---|---|---|---|---|
| | | 1.5" & under | 2" | 2.5" | 3.5" | 4" | 4.5" | 6" | 8.5" | 10" | 30" Hg Vac | Compound | 15" $H_2O$ - 200" $H_2O$ | 15" $H_2O$ Vac - 200" $H_2O$ Vac | 15 - 300 psi | 400 - 600 psi | 1,000 - 5,000 psi | 6,000 - 20,000 psi | Steel | Plastic | Phenolic | Stainless Steel | Fluid-fillable Case | Brass | Aluminum | Aluminum | Brass | Lead Free Brass | Stainless Steel | Carbon Steel | 1/8" NPT | 1/4" NPT | 7/16"-20 SAE | 1/2" NPT | 3/4" NPT | Tri-Clamp® | Bottom Mount | Centre Back | Lower Back | In Line | 5% of full scale value | 3-2-3% (Grade B) | 2.5% of full scale value | 2% of full scale value | 2-1-2% (Grade A) | 1.5% of full scale value | 1% (Grade 1A) | 0.75% of full scale value | 0.5% and better (2A - 4A) | RoHS compliant |
| 108 | DPG Digital Pressure Gauge | | | X | | | | | | | X | X | | | X | X | X | X | | X | | | | | | | | X | | | X | | | | | X | | | | | | | X | | | X |
| 33 | P1S 100 Series Gauge | | | | X | X | X | X | | | X | X | | | X | X | X | | X | | | | | | X | | X | | | | X | | | | | X | X | X | | | | | X | | | |
| 36 | P3S 300 Series Gauge | | | | | | X | X | X | X | X | X | | | X | X | X | X | | | | | | | X | | X | | X | | | X | | | | | X | | X | | | | | | X | |
| 72 | P9S 300 Series Gauge | X | X | X | X | | | | | | X | X | | | X | X | | | X | | | | | | | | X | | | X | X | | | | | X | X | | | | | X | | | | |
| 75 | P9U 90 Series Gauge | X | X | X | X | | | | | | X | | | | X | X | | | X | | | | | | | | X | | | X | X | | | | | | X | | | | | X | | | | |
| 95 | PAG 3A Premium Pharmaceutical & Sanitary Gauge | | | X | | X | | | | | X | X | | | X | X | | | | | | X | X | | | | | X | | | | | | | X | X | X | X | | | | | X | | X |
| 109 | PAM Ammonia Gauge | | | X | X | X | | X | X | X | X | X | | | | | | | X | | | X | X | | X | | | X | | | X | | | | | X | X | X | | | | X | X | X | X |
| 39 | PBC Forged Brass Case Gauge | | | X | | X | | | | | X | X | | | X | X | X | X | | | | | X | X | | | X | | | | X | | X | | | X | X | | | | | | X | X | | |
| 42 | PCC Colour Coded Gauge | | | | | X | | | | | X | X | | | X | X | X | X | | X | | | X | | | | X | | X | | X | | X | | | X | | | | | | | | X | | |
| 100 | PCG Compressed Gas Gauge | X | X | | | | | | | | | | | | X | X | X | | X | | | | | | | | X | | | X | X | | | | | X | X | | | | X | | | | | |
| 44 | PCT Contractor Gauge | | | | | | X | | | | X | X | | | X | X | X | | | | | X | | | | | X | | | | X | | | | | X | | | | | | | | X | | |
| 44 | PCT-LF Lead Free Contractor Gauge | | | | | | X | | | | X | X | | | X | X | X | | | | | X | | | | | | X | | | X | | | | | X | | | | | | | | X | | |
| 83 | PDT Differential Gauge | | | | | | X | X | | | | | | | X | X | | | | | | | | | X | | X | | X | | X | | | | | X | | X | | | | | | X | | |
| 85 | PDX Duplex Gauge | | | | | | X | X | | | | | | | X | X | | | | | | | | | X | | X | | X | | X | | | | | X | | X | | | | | | X | | |
| 78 | PEM Economy Gauge | X | X | X | | X | | | | | X | X | | | X | X | X | | X | | X | | | | | | X | | | | X | X | | | | X | X | | | | X | | | | | |
| 78 | PEM-LF Lead Free Economy Gauge | X | X | X | | X | | | | | X | X | | | X | X | X | | X | | X | | | | | | | X | | | X | X | | | | | X | X | | | | X | | | | | |
| 18 | PEM-ZR Economy StabiliZR® Gauge | X | X | X | | X | | | | | X | X | | | X | X | X | | X | | X | | | | | | X | | | | X | X | | | | | X | X | | | | X | | | | | |
| 118 | PET Economy Test Gauge | | X | X | | | | | | | | | | | X | | | | X | | | | | | | | X | | | | | | | X | | | X | | | | | X | | | | | |
| 118 | PET-LF Lead Free Economy Test Gauge | | | X | | | | | | | | | | | X | | | | X | | | | | | | | | X | | | | | | X | | | X | | | | | X | | | | | |
| 81 | PEU Economy Panel Mounted Gauge | X | X | X | | | | | | | X | | | | X | | | | X | | | | | | | | X | | | | X | X | | | | | X | | | | | X | | | | | |
| 87 | PFD WinAIR Differential Gauge | | | | | X | | | | | | X | X | X | | | | | | | | | | | X | X | | | | | X | | | | | X | | | | | | | | | | |
| 112 | PFE Sprinkler Gauge | | | | X | | | | | | | | | | X | | | | | X | | | | | | | X | | | | | X | | | | | X | | X | | | X | | | | | |
| 113 | PFG Refrigeration Gauge | | | X | | X | | X | | | X | X | | | X | X | | | X | X | | | | | | | | | | | X | X | | | | | X | X | | | | | X | | | | |
| 45 | PFP Premium Stainless Steel Liquid Filled Gauge | | | X | | X | X | X | | | X | X | | | X | X | X | X | | | | X | X | | | | X | | X | | | X | | | | | X | X | X | | | | X | X | | |
| 51 | PFP Premium Stainless Steel Liquid Filled Gauge for Panel Mounting | | | X | | | | | | | X | X | | | X | X | X | X | | | | X | X | | | | | | X | | | X | | | | | | | X | | | | X | | | |
| 21 | PFP-ZR Premium Stainless Steel StabiliZR® Gauge | | | X | | X | | X | | | X | X | | | X | X | X | X | | | | X | | | | | | | X | | | X | | | | | X | X | X | | | | X | X | | |
| 53 | PFQ Stainless Steel Liquid Filled Gauge | X | X | X | | X | | | | | X | X | | | X | X | X | X | | | | X | X | | | | X | | X | | X | X | X | X | | | X | X | | | | | X | | | |
| 53 | PFQ-LF Lead Free Stainless Steel Liquid Filled Gauge | | | X | | X | | | | | X | X | | | X | X | X | X | | | | X | | | | | | X | | | | X | | | | | X | X | | | | | X | | | |
| 25 | PFQ-ZR Stainless Steel StabiliZR® Gauge | | | X | | | | | | | X | X | | | X | X | X | X | | | | X | | | | | X | | | | | X | | | | | X | X | | | | | | X | | |
| 115 | PLP Low Pressure Gauge | | | X | | X | X | X | | | | | X | X | | | | | X | | | X | | | X | | X | | X | | | X | | | | | X | X | | | | X | | | | |
| 64 | PN2 NACE Gauge - MR0175-2002 | | | | | X | | X | | | X | X | | | X | X | X | X | | | | X | X | | | | | | X | | | X | | X | | | X | X | | | | | | X | | X |
| 28 | PN2-ZR NACE StabiliZR® Gauge - MR0175-2002 | | | | | X | | | | | X | X | | | X | X | X | X | | | | X | | | | | | | X | | | | X | | | | X | | | | | | | X | | X |
| 11 | PPC Process Gauge | | | | | | X | | | | X | X | | | X | X | X | X | | | X | | X | | | | X | | X | | | X | | X | | | X | | X | | | | | X | X |
| 30 | PPC-ZR StabiliZR® Process Gauge | | | | | | X | | | | X | X | | | X | X | X | X | | | X | | | | | | X | | X | | | X | | X | | | X | | X | | | | | X | X |
| 91 | PPD Piston (High Static Pressure Differential) | | | X | X | | X | | | | | | | | X | | | | | X | | | | X | | | X | | X | | | X | | X | | | X | X | | X | | | X | | |
| 13 | PRC Receiver Gauge | | | | | | X | | | | | | | | X | | | | | | X | | | | | | X | | X | | | X | | X | | | X | | X | | | | | X | |
| 92 | PRD Rolling Diaphragm (High Static Pressure Differential) | | | X | | | | | | | | | | | X | | | | | X | | | | | | | | | X | | | X | | | | | | | X | X | | | | | |
| 102 | PRL Regulator Gauge | X | X | | | | | | | | X | | | | X | X | X | | | | | X | | | | | | | X | | X | X | | | | X | X | | | | | X | | | | X |
| 66 | PSC Safety Case Gauge | | | | | X | X | X | | | X | X | | | X | X | X | | | | | X | X | | | | | | X | | | X | | | | | X | | | | | | X | | X | X |
| 93 | PSD Small Convoluted Diaphragm (High Static Pressure Differential) | | | X | X | | X | | | | | | | | X | | | | | X | | | | X | | | X | | X | | X | X | | | | X | X | | X | | | X | | | |
| 14 | PSG Schaeffer Gauge | | | | | X | | X | | | | | X | | X | | | | | | | X | | | | | | | X | | | | X | | | | X | | | | | | | X | | |
| 104 | PSP Spiral Tube Gauge | X | | | | | | | | | | | | | X | X | X | | | | | | X | | | X | | | X | | X | | | | | | X | | | | X | | | | | |
| 97 | PSQ 3A Quality Sanitary Gauge | | | X | | X | | | | | X | X | | | X | X | X | | | | | X | | | | | | | X | | | | | X | X | X | X | | | | | X | X | | X |
| 68 | PTG Test Gauge | | | | | X | | X | | | X | | | | X | X | X | X | | | | X | | | | | X | | | | X | | X | | | X | | | | | | | | X | | |
| 16 | PTR Tamper Resistant Process Gauge | | | | | | X | | | | | | | | X | X | X | | | | X | | | | | | | | X | | | | X | | | X | | | | | | | X | | | |
| 70 | PTS Tube Stub Gauge | | | X | | | | | | | X | X | | | X | X | X | | | | | X | X | | | | | | X | | | X | | | | | X | X | | | | | X | | | |
| 94 | PVD Convoluted Diaphragm (High Static Pressure Differential) | | | | X | | X | | | | | | | X | | | | | | X | | | | | X | | X | | X | | | X | | | | | X | X | | X | X | | X | | | |
| 106 | PWL Welding Gauge | X | X | X | | | | | | | | | | | X | X | X | | | | | | X | | | X | | | X | | X | X | | | | X | | | | X | | | | | | |

**Note: When selecting a pressure gauge, always refer to ASME B40.100 (2013)**

# PPC Process Gauge




1. Optional Hinged Case
2. Optional Flush Mounting Ring

RoHS compliant

Note: RoHS applies to SS and Monel® internals only

## Description & Features:

- Solid phenolic front and polypropylene pressure relief back safety case
- Field liquid-fillable (bottom connection only)
- ±0.5% accuracy
- Stainless steel full rotary movement for longer life
- Micrometer adjustable pointer for ease in calibration
- Under and overload stops
- 316L stainless steel, brass, Monel® wetted parts
- Restricted orifice standard on dual scale (optional on single scale)
- ASME B40.100 compliant
- CRN registered
- 5 year warranty

## Applications:

- Ideally suited for process, chemical, petroleum and power industries
- Suitable for non-clogging corrosive media
- Used where operator safety is a requirement
- Processes where pulsation and vibration exist (with liquid filling)

| Specifications | Stainless Steel Internals | Brass Internals |
|---|---|---|
| Dial | 4.5” (115mm) white aluminum with black and red markings | 4.5” (115mm) white aluminum with black and red markings |
| Case | Black phenolic with pressure relief back, solid front, integral back flange | Black phenolic with pressure relief back, solid front, integral back flange |
| Solid Wall | Phenolic | Phenolic |
| Pressure Relief Back | Polypropylene | Polypropylene |
| Window | Polycarbonate | Polycarbonate |
| Ring | Phenolic | Phenolic |
| Pointer | Aluminum, anodized black, micrometer adjustable | Aluminum, anodized black, micrometer adjustable |
| Socket | 316L SS | OT 58 brass |
| Connection | 1/4” NPT or 1/2” NPT standard, bottom or back | 1/4” NPT or 1/2” NPT standard, bottom or back |
| Bourdon Tube | 316L SS, drawn seamless | Phosphor bronze |
| Movement | 304 SS with under and overload stops | 304 SS with under and overload stops |
| Gasket Materials | Dry & glycerin filled gauges: Black NBR<br>Silicone filled gauges: Brown NBR | Dry & glycerin filled gauges: Black NBR<br>Silicone filled gauges: Brown NBR |
| Welding | TIG | Silver alloy |
| Over-pressure Limit | 25% for pressures below 1,500 psi (10,341 kPa),<br>15% for pressures 1,500 psi to 8,700 psi (10,341 kPa to 59,984 kPa),<br>10% for pressures above 8,700 psi (59,984 kPa) | 25% for pressures below 1,500 psi (10,341 kPa),<br>15% for pressures 1,500 psi to 8,700 psi (10,341 kPa to 59,984 kPa),<br>10% for pressures above 8,700 psi (59,984 kPa) |
| Working Pressure | Maximum 75% of full scale value | Maximum 75% of full scale value |
| Ambient Temperature | Dry: -40°F to 250°F (-40°C to 120°C)<br>Glycerin Filled: -4°F to 150°F (-20°C to 65°C) | Dry: -40°F to 250°F (-40°C to 120°C)<br>Glycerin Filled: -4°F to 150°F (-20°C to 65°C) |
| Process Temperature | -40°F to 250°F (-40°C to 120°C) | -40°F to 150°F (-40°C to 65°C) |
| Accuracy | ±0.5% ANSI/ASME Grade 2A | ±0.5% ANSI/ASME Grade 2A |
| Enclosure Rating | IP65 | IP65 |
| Warning (brass internals only) | N/A | ⚠ **WARNING:** This product can expose you to chemicals including lead, which is known to the State of California to cause cancer and birth defects or other reproductive harm. For more information go to www.P65Warnings.ca.gov. |

Monel® is a registered trademark of Inco Alloys International

## Single Scale Order Codes (products in bold are normally stock in North America)

| Connection | 1/4" Bottom | 1/4" Back (LB) | 1/2" Bottom | 1/2" Back (LB) |
|---|---|---|---|---|
| Socket, Tube | SS | | | |
| 30" Hg Vac | PPC5040R6 | PPC5340R6 | PPC5060R6 | PPC5460R6 |
| 30"/0/15 psi | PPC5130R1 | PPC5330R1 | PPC5140R1 | PPC5440R1 |
| 30"/0/30 psi | PPC5131R1 | PPC5331R1 | **PPC5141R1** | PPC5441R1 |
| 30"/0/60 psi | PPC5132R1 | PPC5332R1 | PPC5142R1 | PPC5442R1 |
| 30"/0/100 psi | PPC5133R1 | PPC5333R1 | PPC5143R1 | PPC5443R1 |
| 30"/0/160 psi | PPC5134R1 | PPC5334R1 | PPC5144R1 | PPC5444R1 |
| 30"/0/200 psi | PPC5135R1 | PPC5335R1 | PPC5145R1 | PPC5445R1 |
| 30"/0/300 psi | PPC5136R1 | PPC5336R1 | PPC5146R1 | PPC5446R1 |
| 0/15 psi | PPC5041R1 | PPC5341R1 | PPC5061R1 | PPC5461R1 |
| 0/30 psi | PPC5042R1 | PPC5342R1 | **PPC5062R1** | PPC5462R1 |
| 0/60 psi | PPC5043R1 | PPC5343R1 | **PPC5063R1** | PPC5463R1 |
| 0/100 psi | **PPC5044R1** | PPC5344R1 | **PPC5064R1** | PPC5464R1 |
| 0/160 psi | PPC5045R1 | PPC5345R1 | **PPC5065R1** | PPC5465R1 |
| 0/200 psi | PPC5046R1 | PPC5346R1 | **PPC5066R1** | PPC5466R1 |
| 0/300 psi | PPC5047R1 | PPC5347R1 | **PPC5067R1** | PPC5467R1 |
| 0/400 psi | PPC5048R1 | PPC5348R1 | **PPC5068R1** | PPC5468R1 |
| 0/600 psi | PPC5049R1 | PPC5349R1 | **PPC5069R1** | PPC5469R1 |
| 0/800 psi | PPC5058R1 | PPC5358R1 | **PPC5078R1** | PPC5478R1 |
| 0/1,000 psi | PPC5050R1 | PPC5350R1 | **PPC5070R1** | PPC5470R1 |
| 0/1,500 psi | PPC5051R1 | PPC5351R1 | **PPC5071R1** | PPC5471R1 |
| 0/2,000 psi | PPC5052R1 | PPC5352R1 | **PPC5072R1** | PPC5472R1 |
| 0/3,000 psi | PPC5053R1 | PPC5353R1 | **PPC5073R1** | PPC5473R1 |
| 0/5,000 psi | PPC5054R1 | PPC5354R1 | **PPC5074R1** | PPC5474R1 |
| 0/6,000 psi | PPC5199R1 | - | PPC5178R1 | - |
| 0/10,000 psi | PPC5055R1 | PPC5355R1 | PPC5075R1 | PPC5475R1 |
| 0/15,000 psi | PPC5056R1 | PPC5356R1 | PPC5076R1 | PPC5476R1 |
| 0/20,000 psi | PPC5057R1 | PPC5357R1 | PPC5077R1 | PPC5477R1 |

Note: Restrictor screws are not standard on single scale gauges

Other ranges and connection sizes available upon request.

For Win**BRIGHT** dial options refer to Custom Dials

## Dual Scale Order Codes (products in bold are normally stock in North America)

| Connection | 1/4" Bottom | 1/4" Back (LB) | 1/4" Bottom | 1/4" Back (LB) | 1/2" Bottom | 1/2" Back (LB) | 1/2" Bottom | 1/2" Back (LB) |
|---|---|---|---|---|---|---|---|---|
| Socket, Tube | Brass | | SS | | Brass | | SS | |
| 30" Hg Vac/kPa | PPC5080 | PPC5280 | PPC5040 | PPC5340 | - | - | PPC5060 | PPC5460 |
| 30"/0/15 psi/kPa | PPC5120 | PPC5220 | PPC5130 | PPC5330 | - | - | PPC5140 | PPC5440 |
| 30"/0/30 psi/kPa | PPC5121 | PPC5221 | PPC5131 | PPC5331 | - | - | PPC5141 | PPC5441 |
| 30"/0/60 psi/kPa | PPC5122 | PPC5222 | PPC5132 | PPC5332 | - | - | PPC5142 | PPC5442 |
| 30"/0/100 psi/kPa | PPC5123 | PPC5223 | PPC5133 | PPC5333 | - | - | PPC5143 | PPC5443 |
| 30"/0/160 psi/kPa | PPC5124 | PPC5224 | PPC5134 | PPC5334 | - | - | PPC5144 | PPC5444 |
| 30"/0/200 psi/kPa | PPC5125 | PPC5225 | PPC5135 | PPC5335 | - | - | PPC5145 | PPC5445 |
| 30"/0/300 psi/kPa | PPC5126 | PPC5226 | PPC5136 | PPC5336 | - | - | PPC5146 | PPC5446 |
| 0/15 psi/kPa | **PPC5081** | PPC5281 | PPC5041 | PPC5341 | - | - | **PPC5061** | PPC5461 |
| 0/30 psi/kPa | **PPC5082** | PPC5282 | PPC5042 | PPC5342 | - | - | **PPC5062** | PPC5462 |
| 0/60 psi/kPa | **PPC5083** | PPC5283 | PPC5043 | PPC5343 | - | - | **PPC5063** | PPC5463 |
| 0/100 psi/kPa | **PPC5084** | PPC5284 | **PPC5044** | PPC5344 | - | - | **PPC5064** | PPC5464 |
| 0/160 psi/kPa | **PPC5085** | PPC5285 | **PPC5045** | PPC5345 | - | - | **PPC5065** | PPC5465 |
| 0/200 psi/kPa | **PPC5086** | PPC5286 | **PPC5046** | PPC5346 | - | - | **PPC5066** | PPC5466 |
| 0/300 psi/kPa | **PPC5087** | PPC5287 | **PPC5047** | PPC5347 | - | - | **PPC5067** | PPC5467 |
| 0/400 psi/kPa | PPC5088 | PPC5288 | PPC5048 | PPC5348 | - | - | PPC5068 | PPC5468 |
| 0/600 psi/kPa | **PPC5089** | PPC5289 | PPC5049 | PPC5349 | - | - | **PPC5069** | PPC5469 |
| 0/800 psi/kPa | PPC5099 | PPC5299 | PPC5058 | PPC5358 | PPC5188 | PPC5198 | PPC5078 | PPC5478 |
| 0/1,000 psi/kPa | PPC5098 | PPC5298 | PPC5050 | PPC5350 | PPC5090 | PPC5290 | **PPC5070** | PPC5470 |
| 0/1,500 psi/kPa | - | - | PPC5051 | PPC5351 | PPC5091 | PPC5291 | PPC5071 | PPC5471 |
| 0/2,000 psi/kPa | - | - | PPC5052 | PPC5352 | PPC5092 | PPC5292 | PPC5072 | PPC5472 |
| 0/3,000 psi/kPa | - | - | PPC5053 | PPC5353 | PPC5093 | PPC5293 | PPC5073 | PPC5473 |
| 0/5,000 psi/kPa | - | - | PPC5054 | PPC5354 | PPC5094 | PPC5294 | PPC5074 | PPC5474 |
| 0/6,000 psi/kPa | PPC5199 | - | PPC5158 | - | PPC5398 | - | PPC5178 | - |
| 0/10,000 psi/kPa | - | - | PPC5055 | PPC5355 | PPC5095 | PPC5295 | PPC5075 | PPC5475 |
| 0/15,000 psi/kPa | - | - | PPC5056 | PPC5356 | PPC5096 | PPC5296 | PPC5076 | PPC5476 |
| 0/20,000 psi/kPa | - | - | PPC5057 | PPC5357 | PPC5097 | PPC5297 | PPC5077 | PPC5477 |

# PPC Process Gauge

## Engineering Codes

| PPC ENGINEERED PART NUMBER | | P P C - □ □ □ - □ □ □ - □ □ - □ □ - □ □ - □ □ - □ □ - □ □ - □ □ □ □ |
|---|---|---|
| **DIAL SIZE** | 4.5" (115mm) | 4 5 |
| **PRESSURE SCALE & RANGE** | SEE PRESSURE RANGES BELOW | # # # |
| **CASE MATERIAL** | PHENOLIC | P H |
| **WETTED PARTS** | BRASS/BRONZE | B R |
| | 316L | S L |
| | MONEL | M |
| **PROCESS CONNECTION SIZE** | 1/4" | N 4 |
| | 1/2" | N 2 |
| **PROCESS CONNECTION TYPE** | NPT | N |
| | BSP (G) | G |
| | BSPT (R) | R |
| **PROCESS CONNECTION LOCATION** | Bottom, Stem | B |
| | Lower Back | L B |
| **ACCURACY %** | 0.5 | K |
| **OPTIONS, LIST IN ALPHA-NUMERIC ORDER** | GLYCERIN FILL (FOOD GRADE) | G F |
| | GLYCERIN WATER FILL | G W |
| | SILICONE FILL | S F |
| | SILICONE FILL, LOW TEMPERATURE | S T |
| | FLUOROLUBE FILLED | F O |
| | HALOCARBON FILLED | H F |
| | POLYCARBONATE LENS | P L |
| | GLASS LENS | G L |
| | SAFETY GLASS, LAMINATED | S G |
| | SAFETY GLASS, TEMPERED | T G |
| | FLUSH MOUNTING RING | F M R |
| | SOLID FRONT HINGED CASE (DRY CASE ONLY) | H C S F |
| | RESTRICTOR SCREW | R S |
| | RESTRICTED ORIFICE, BRASS | R O |
| | NO RESTRICTOR SCREW / ORIFICE | N R |
| | MOVEMENT 316SS | M S |
| | MOVEMENT 316L | M L |
| | ASME B40.100 ON-DIAL | A S |
| | CUSTOM DIAL, SIMPLE | C 1 |
| | CUSTOM DIAL, COMPLEX | C 2 |
| | WINBRIGHT DIAL REFLECTIVE FLUORESCENT YELLOW-GREEN | W B Y G |
| | WINBRIGHT DIAL REFLECTIVE FLUORESCENT YELLOW | W B Y |
| | WINBRIGHT DIAL FLUORESCENT YELLOW | W B F Y |
| | WINBRIGHT DIAL REFLECTIVE ORANGE | W B O |
| | WINBRIGHT DIAL REFLECTIVE WHITE | W B W |
| | WINBRIGHT DIAL GLOW-IN-THE-DARK WHITE | W B G |
| | MAXIMUM ADJUSTABLE POINTER | M A X |
| | MINIMUM ADJUSTABLE POINTER | M I N |
| | RED SET POINTER | R S P |
| | ROSH COMPLIANT | R |
| | NACE COMPLIANT | N |
| | LEAD FREE, NSF 61/372 COMPLIANT | L F |
| | STABILIZR® | Z R |
| | SPECIAL | Z # # # |

# Process Gauge



## 4.5” Bottom Connection

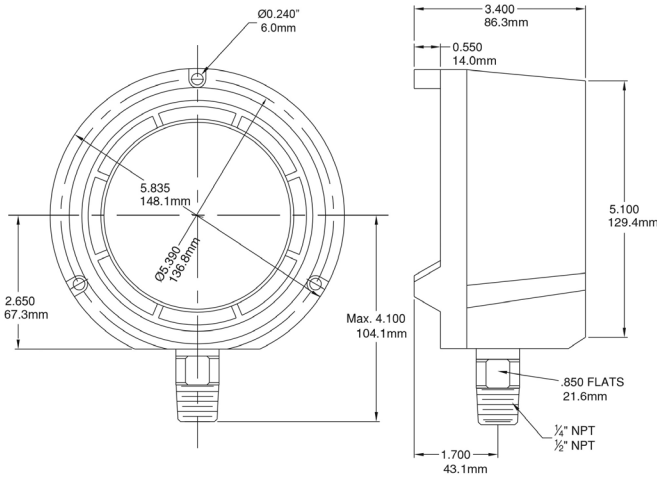


## 4.5” Back Connection

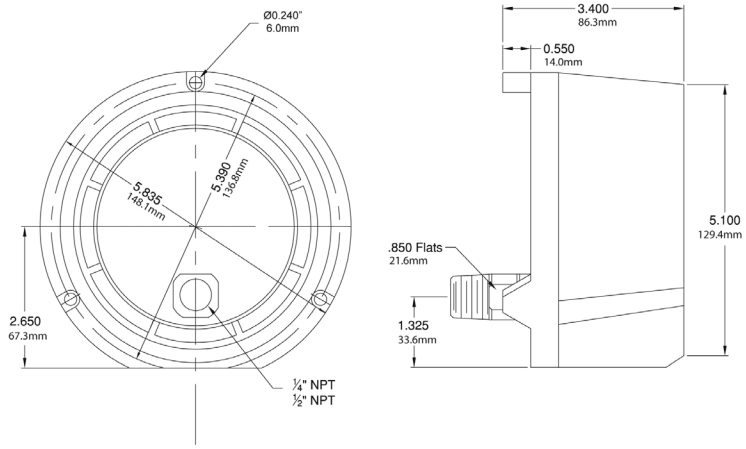


## PRC Receiver Gauge




### Description & Features:

- High quality gauge designed to work with a pneumatic transmitter or controller
- 3-15 psi with a variety of receiver ranges
- 316 stainless steel or brass wetted parts
- ASME B40.100 compliant
- CRN registered
- 5 year warranty

### Applications:

- Works in conjunction with valves and transmitters to indicate changes in pressure, temperature, flow, level, or other measured proportional variables

### Order Codes

| Connection | 1/4” Bottom | 1/4” Back | 1/4” Bottom | 1/4” Back |
|---|---|---|---|---|
| Socket, Tube | Brass | | SS | |
| 3/15 psi/0-100% | PRC5081REC | PRC5281REC | PRC5041REC | PRC5341REC |
| 3/27 psi/0-100% | PRC5082REC | PRC5283REC | PRC5042REC | PRC5342REC |

# PSG | Process Gauge




## Description & Features:

- A combination pressure gauge and diaphragm seal forming one unique instrument that measures low pressures where protection from the process media is required
- Bottom connection only
- All stainless steel construction
- A variety of materials available
- ASME B40.100 compliant
- CRN registered
- 5 year warranty

## Applications:

- Used for low pressure corrosive media where diaphragm seal protection is needed
- Processes where low or high temperature will affect seal fill fluid

| Specifications | |
|---|---|
| **Dial** | 4” (100mm), 6” (150mm) white aluminum with black markings |
| **Case** | 304 SS |
| **Upper Flange** | SS (neck and base movements) |
| **Lower Flange** | 316L SS bottom connection |
| **Lens** | Acrylic |
| **Connection** | 1/2” NPTM bottom (female optional) |
| **Diaphragm Element** | 316 SS, 316 SSI PTFE lined, (Tantalum option) |
| **Movement** | All SS - Push rod / connecting link and segment |
| **Pointer** | Adjustable pointer - aluminum |
| **Wetted Parts** | 316 SS (other materials available upon request) |
| **Ambient Temperature** | -13°F to 150°F (-25°C to 65°C) |
| **Process Temperature** | 212°F (100°C) Maximum |
| **Accuracy** | ±1.5% of full scale value |
| **Enclosure Rating** | IP65 |

## Single Scale Order Codes

| Dial Size | 4” (100mm) | 6” (150mm) |
|---|---|---|
| **Connection** | **1/2” Bottom** | |
| 0/10” water/oz | PSG40105R8 | PSG60105R1 |
| 0/30” water/oz | PSG40305R1 | PSG60305R1 |
| 0/60” water/oz | PSG40605R1 | PSG60605R1 |
| 0/100” water/oz | PSG401005R1 | PSG601005R1 |
| 0/160” water/oz | PSG401605R1 | PSG601605R1 |
| 0/200” water/oz | PSG402005R1 | PSG602005R1 |
| 0/300” water/oz | PSG403005R1 | PSG603005R1 |
| 0/10 psi | PSG4105R1 | PSG6105R1 |
| 0/15 psi | PSG4155R1 | PSG6155R1 |
| 0/30 psi | PSG4305R1 | PSG6305R1 |
| 0/60 psi | PSG4605R1 | PSG6605R1 |
| 0/100 psi | PSG41005R1 | PSG61005R1 |
| 0/160 psi | PSG41605R1 | PSG61605R1 |
| 0/200 psi | PSG42005R1 | PSG62005R1 |
| 0/300 psi | PSG43005R1 | PSG63005R1 |

Other ranges and connection sizes available upon request. For scale change, refer to How to Order Guide for scale codes. **For options, attach suffix to end of order code: i.e. PSG41005R1-SG-4 for SAFETY GLASS.**

**Option suffix:**
SG-4 = 4” (100mm) Safety glass lens
SG-6 = 6” (150mm) Safety glass lens

## Dual Scale Order Codes

| Dial Size | 4" (100mm) | 6" (150mm) |
|---|---|---|
| Connection | 1/2" Bottom | |
| 0/10" water/oz | PSG40105 | PSG60105 |
| 0/30" water/oz | PSG40305 | PSG60305 |
| 0/60" water/oz | PSG40605 | PSG60605 |
| 0/100" water/oz | PSG401005 | PSG601005 |
| 0/160" water/oz | PSG401605 | PSG601605 |
| 0/200" water/oz | PSG402005 | PSG602005 |
| 0/300" water/oz | PSG403005 | PSG603005 |
| 0/10 psi/kPa | PSG4105 | PSG6105 |
| 0/15 psi/kPa | PSG4155 | PSG6155 |
| 0/30 psi/kPa | PSG4305 | PSG6305 |
| 0/60 psi/kPa | PSG4605 | PSG6605 |
| 0/100 psi/kPa | PSG41005 | PSG61005 |
| 0/160 psi/kPa | PSG41605 | PSG61605 |
| 0/200 psi/kPa | PSG42005 | PSG62005 |
| 0/300 psi/kPa | PSG43005 | PSG63005 |

Other ranges and connection sizes available upon request. For scale change, refer to How to Order Guide for scale codes. **For options, attach suffix to end of order code: i.e. PSG41005-SG-4 for SAFETY GLASS.**

**Option suffix:**
SG-4 = 4" (100mm) Safety glass lens
SG-6 = 6" (150mm) Safety glass lens

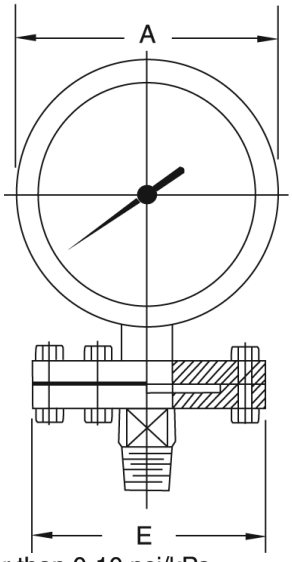


For pressure ranges greater than 0-10 psi/kPa

| Case Dia. | Flange Dia. | A | B | C | D | E |
|---|---|---|---|---|---|---|
| 4" / 100 mm | 4" / 100 mm | 4.43" / 112 | 3.90" / 99 | 2.16" / 55 | 6.99" / 177 | 3.86" / 98 |
| 6" / 150 mm | 4" / 100 mm | 6.10" / 155 | 5.51" / 140 | 2.20" / 56 | 6.99" / 177 | 3.86" / 98 |

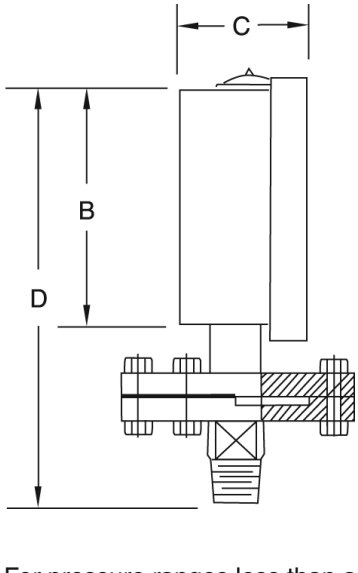


For pressure ranges less than and equal to 10 psi/kPa

| Case Dia. | Flange Dia. | A | B | C | D | E |
|---|---|---|---|---|---|---|
| 4" / 100 mm | 6" / 150 mm | 4.43" / 112 | 3.90" / 99 | 2.16" / 55 | 6.99" / 177 | 6.10" / 155 |
| 6" / 150 mm | 6" / 150 mm | 6.10" / 155 | 5.51" / 140 | 2.20" / 56 | 6.99" / 177 | 6.10" / 155 |

# PTR | Tamper Resistant Process Gauge




## Description & Features:

- Solid front, pressure relief back, welded to a 316L stainless steel one-piece diaphragm seal body
- 316L stainless steel diaphragm for use on most corrosive media
- Permanently enclosed silicone filled system
- Field-fillable gauge
- Orifice restrictor available for severe pulsation
- Pin stop at 6 o'clock available
- ASME B40.100 compliant
- CRN registered
- 5 year warranty on gauge and seal

## Applications:

- Process industry where tamper-resistant gauge/seal is required to protect against maintenance errors in the field
- Suited for installations in process, oil and gas, petrochemical and chemical industries
- Tamper resistant construction controls leaks and protects against field errors

| Specifications - Gauge | |
|---|---|
| **Dial** | 4.5" (115mm) white aluminum with black and red markings |
| **Case** | Black phenolic with pressure relief back, solid front, integral back flange |
| **Solid Wall** | Phenolic |
| **Pressure Relief Back** | Polypropylene |
| **Window** | Polycarbonate |
| **Ring** | Phenolic |
| **Pointer** | Aluminum, anodized black, micrometer adjustable |
| **Socket** | 316L SS |
| **Bourdon Tube** | 316L SS, drawn seamless |
| **Movement** | 304 SS with protective under and overload stops |
| **Gasket Materials** | Silicone (FKM option) |
| **Welding** | TIG |
| **Over-pressure Limit** | 25% for pressures up to 1,450 psi (9,998 kPa),<br>15% for pressures 1,451 psi to 5,000 psi (9,998 kPa to 34,474 kPa) |
| **Working Pressure** | Maximum 75% of full scale value |
| **Ambient Temperature** | Dry: -40°F to 250°F (-40°C to 120°C) |
| **Process Temperature** | Silicone Filled: -49°F to 302°F (-45°C to 150°C) |
| **Accuracy** | ±1% ANSI/ASME Grade A |
| **Enclosure Rating** | IP65 |

| Specifications - Seal | |
|---|---|
| **Housing** | AISI 316 SS |
| **Diaphragm** | AISI 316L SS, welded |
| **Minimum Operating Pressure** | 15 psi (103 kPa) |
| **Maximum Operating Pressure** | 2,500 psi to 5,000 psi (17,237 kPa to 34,474 kPa) |
| **Process Connection** | 1/2" NPTM |
| **System Fill** | Silicone oil KF96 50CS |

## Order Codes

| Connection | 1/2" Bottom |
|---|---|
| **Socket, Tube** | **SS** |
| 0/15 psi | PTR5061R1 |
| 0/30 psi | PTR5062R1 |
| 0/60 psi | PTR5063R1 |
| 0/100 psi | PTR5064R1 |
| 0/160 psi | PTR5065R1 |
| 0/200 psi | PTR5066R1 |
| 0/300 psi | PTR5067R1 |
| 0/400 psi | PTR5068R1 |
| 0/600 psi | PTR5069R1 |
| 0/1,000 psi | PTR5070R1 |
| 0/1,500 psi | PTR5071R1 |
| 0/2,000 psi | PTR5072R1 |
| 0/3,000 psi | PTR5073R1 |
| 0/5,000 psi | PTR5074R1 |

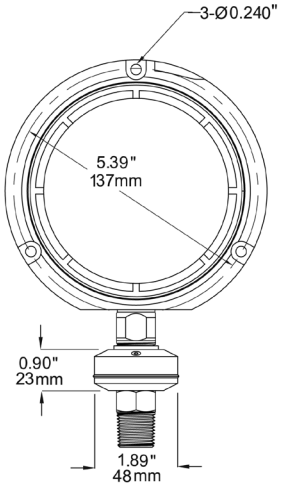


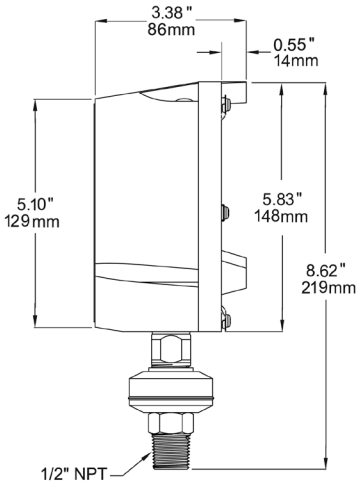


Other ranges and connection sizes (3/4" NPTM, 1" NPTM, 1/2" NPTF) available upon request. Other fills available. Pin stop at 6 o'clock position available. **For options, attach suffix to end of order code: i.e. PTR5070-SF45 for SILICONE-FILLED GAUGE CASE.**

**Option suffix:**

G = Glycerin-filled gauge case
RS = Orifice restrictor for severe pulsation
SF45 = Silicone-filled gauge case
SG-45 = Safety glass
TAG = Stainless steel tagging
TC = NIST test certificate of calibration
ZR = StabiliZR® movement

# PEM-ZR | Economy StabiliZR® Gauge




STABILIZR® power

## Description & Features:

- StabiliZR® dampened movement minimizes effects of pulsation and vibration
- Most economical, all-purpose pressure gauge
- 1.5” (40mm) to 4” (100mm) sizes
- Friction bezel rings
- Black steel case
- Brass wetted parts
- ±3-2-3% accuracy
- ASME B40.100 compliant (EN837-1 available)
- CRN registered
- 5 year warranty

## Applications:

- General purpose gauge for plumbing, heating, air conditioning, pneumatic, hydraulic, water tanks and air compressors
- Suitable for non-clogging and non-corroding media

| Specifications | |
|---|---|
| **Dial** | 1.5” (40mm), 2” (50mm), 2.5” (63mm), 4” (100mm) white aluminum with black and red markings |
| **Case** | Steel, painted black (plastic available) |
| **Lens** | 1.5” (40mm), 2” (50mm), 2.5” (63mm): Acrylic<br>4” (100mm): Glass |
| **Ring** | 1.5” (40mm), 2” (50mm): Steel, painted black<br>2.5” (63mm), 4” (100mm): Steel, chrome plated |
| **Socket** | Brass |
| **Connection** | 1/8” NPT or 1/4” NPT standard |
| **Bourdon Tube** | Phosphor bronze |
| **Movement** | Brass, StabiliZR® dampened movement (silicone in sealed chamber) |
| **Pointer** | Aluminum, black |
| **Welding** | Silver alloy |
| **Over-pressure Limit** | 25% of full scale value |
| **Working Pressure** | Maximum 75% of full scale value |
| **Ambient Temperature** | -76°F to 200°F (-60°C to 93°C) |
| **Process Temperature** | -40°F to 150°F (-40°C to 65°C) |
| **Accuracy** | ±3-2-3% ANSI/ASME Grade B |
| **Enclosure Rating** | IP52 |
| **Warning** | ⚠ **WARNING:** This product can expose you to chemicals including lead, which is known to the State of California to cause cancer and birth defects or other reproductive harm. For more information go to www.P65Warnings.ca.gov. |

# PEM-ZR | Economy StabiliZR® Gauge

## Order Codes (products in bold are normally stock in North America)

| Dial Size | 1.5” (40mm) | | 2” (50mm) | | | | 2.5” (63mm) | | 4” (100mm) |
|---|---|---|---|---|---|---|---|---|---|
| Connection | 1/8” Bottom | 1/8” Back (CB) | 1/8” Bottom | 1/8” Back (CB) | 1/4” Bottom | 1/4” Back (CB) | 1/4” Bottom | 1/4” Back (CB) | 1/4” Bottom |
| Case Material | Steel | | | | | | Steel | | |
| 30” Hg Vac/kPa | PEM1297ZR | PEM1397ZR | PEM195ZR | PEM1424ZR | PEM135ZR | PEM1428ZR | PEM210ZR | PEM1431ZR | PEM220ZR |
| 30”/0/15 psi/kPa | - | - | - | - | - | - | PEM152ZR | - | - |
| 30”/0/30 psi/kPa | - | - | - | - | - | - | PEM153ZR | - | - |
| 30”/0/60 psi/kPa | - | - | - | - | - | - | PEM154ZR | - | - |
| 30”/0/100 psi/kPa | - | - | - | - | - | - | PEM155ZR | - | - |
| 0/15 psi/kPa | PEM1299ZR | PEM1399ZR | PEM196ZR | PEM1425ZR | PEM136ZR | PEM1429ZR | PEM211ZR | PEM1436ZR | PEM295ZR |
| 0/30 psi/kPa | PEM1300ZR | PEM1400ZR | PEM206ZR | PEM1402ZR | PEM199ZR | PEM1403ZR | PEM212ZR | PEM1437ZR | PEM221ZR |
| 0/60 psi/kPa | PEM1301ZR | PEM1401ZR | PEM207ZR | PEM1404ZR | PEM201ZR | PEM1405ZR | PEM213ZR | PEM1438ZR | PEM222ZR |
| 0/100 psi/kPa | PEM1320ZR | PEM1420ZR | PEM208ZR | PEM1406ZR | PEM202ZR | PEM1407ZR | PEM214ZR | PEM1439ZR | PEM223ZR |
| 0/160 psi/kPa | PEM1321ZR | PEM1421ZR | PEM197ZR | PEM1408ZR | PEM203ZR | **PEM1409ZR** | PEM215ZR | PEM1440ZR | PEM224ZR |
| 0/200 psi/kPa | PEM1322ZR | PEM1422ZR | PEM209ZR | PEM1426ZR | PEM204ZR | PEM1410ZR | PEM216ZR | PEM1441ZR | PEM225ZR |
| 0/300 psi/kPa | PEM1323ZR | PEM1423ZR | PEM198ZR | PEM1427ZR | PEM205ZR | PEM1411ZR | PEM217ZR | PEM1442ZR | PEM226ZR |
| 0/400 psi/kPa | - | - | - | - | - | PEM1414ZR | PEM219ZR | PEM3412ZR | PEM227ZR |
| 0/600 psi/kPa | - | - | - | - | - | PEM1412ZR | PEM218ZR | PEM3413ZR | - |
| 0/1,000 psi/kPa | - | - | - | - | - | - | PEM290ZR | - | - |
| 0/3,000 psi/kPa | - | - | - | - | - | - | PEM291ZR | - | - |
| 0/5,000 psi/kPa | - | - | - | - | - | - | PEM292ZR | - | - |

Other ranges and connection sizes available upon request.

### 1.5” Bottom Connection

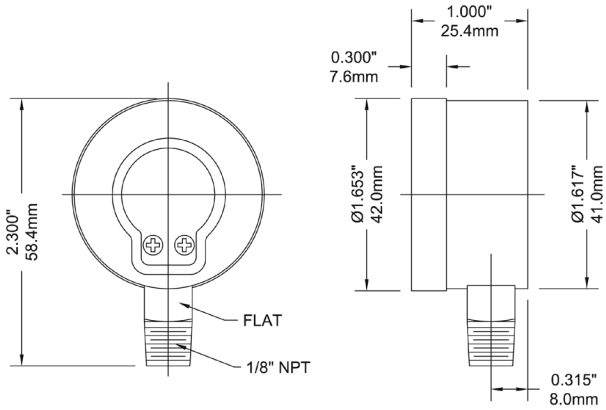


### 1.5” Back Connection

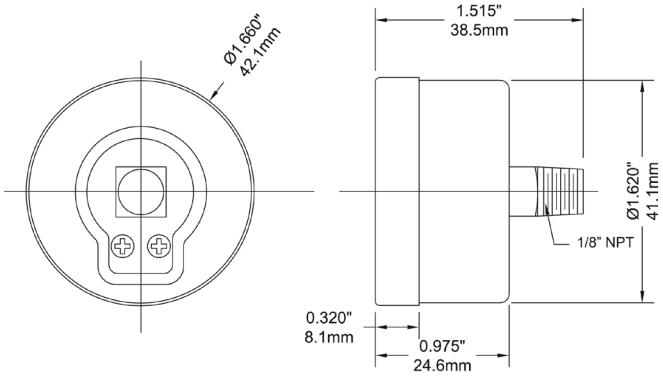

## 2” Bottom Connection

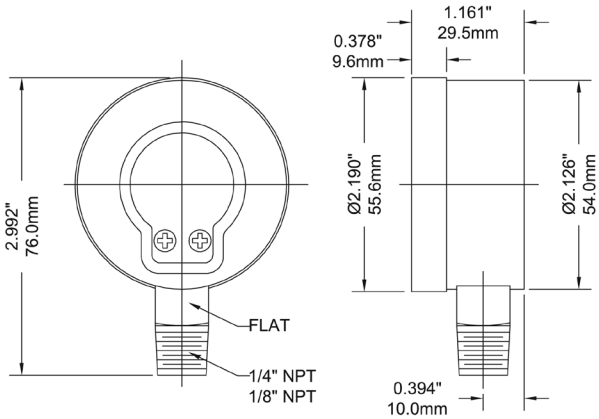


## 2” Back Connection

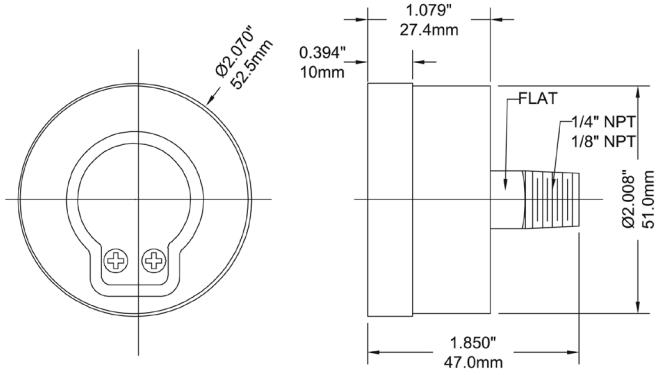


## 2.5” Bottom Connection

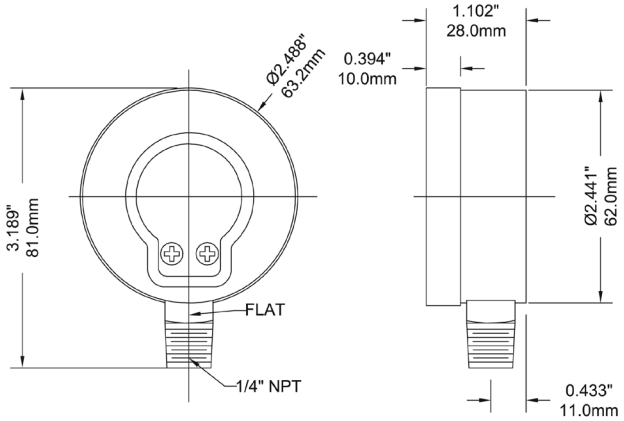


## 2.5” Back Connection

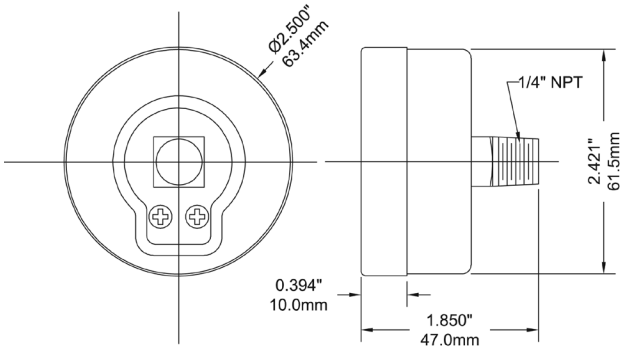


## 4” Bottom Connection

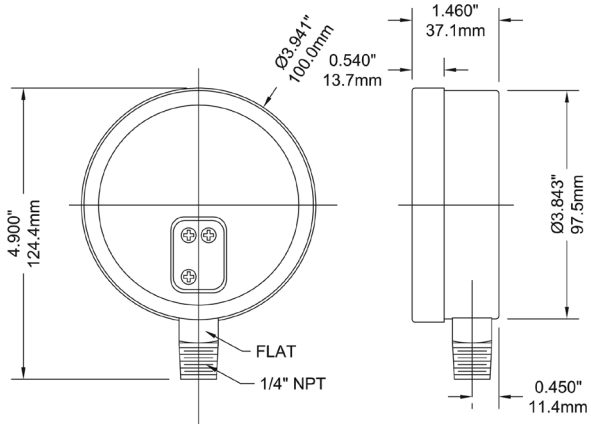

# PEM-ZR | Economy StabiliZR® Gauge

## Engineering Codes

| PEM ENGINEERED PART NUMBER | | P E M - | | | - | | | - | | - | | | - | | | - | | - | | | | - | | | | |
|---|---|---|---|---|---|---|---|---|---|---|---|---|---|---|---|---|---|---|---|---|---|---|---|---|---|---|
| **DIAL SIZE** | 1.5" (40MM) | | 1 | 5 | | | | | | | | | | | | | | | | | | | | | | |
| | 2.0" (50MM) | | 2 | 0 | | | | | | | | | | | | | | | | | | | | | | |
| | 2.5" (63mm) | | 2 | 5 | | | | | | | | | | | | | | | | | | | | | | |
| | 4" (100mm) | | 4 | 0 | | | | | | | | | | | | | | | | | | | | | | |
| **PRESSURE SCALE & RANGE** | SEE PRESSURE RANGES BELOW | | | | # | # | # | | | | | | | | | | | | | | | | | | | |
| **CASE MATERIAL** | BLACK STEEL | | | | | | | B | S | | | | | | | | | | | | | | | | | |
| | 304SS | | | | | | | S | | | | | | | | | | | | | | | | | | |
| | PLASTIC (ABS) | | | | | | | P | | | | | | | | | | | | | | | | | | |
| **WETTED PARTS** | BRASS/BRONZE | | | | | | | | | B | R | | | | | | | | | | | | | | | |
| | 304SS | | | | | | | | | S | | | | | | | | | | | | | | | | |
| **PROCESS CONNECTION SIZE** | 1/8" | | | | | | | | | | | N | 8 | | | | | | | | | | | | | |
| | 1/4" | | | | | | | | | | | N | 4 | | | | | | | | | | | | | |
| | 1/2" | | | | | | | | | | | N | 2 | | | | | | | | | | | | | |
| **PROCESS CONNECTION TYPE** | NPT | | | | | | | | | | | | | N | | | | | | | | | | | | |
| | BSP (G) | | | | | | | | | | | | | G | | | | | | | | | | | | |
| | BSPT (R) | | | | | | | | | | | | | R | | | | | | | | | | | | |
| | BSPT (spigot) | | | | | | | | | | | | | B | | | | | | | | | | | | |
| | M14*1.5 | | | | | | | | | | | | | M | 4 | | | | | | | | | | | |
| | M20*1.5 | | | | | | | | | | | | | M | 2 | | | | | | | | | | | |
| **PROCESS CONNECTION LOCATION** | Bottom, Stem | | | | | | | | | | | | | | | B | | | | | | | | | | |
| | Centre Back | | | | | | | | | | | | | | | C | B | | | | | | | | | |
| | 12 O'Clock | | | | | | | | | | | | | | | 1 | 2 | | | | | | | | | |
| | 3 O'Clock | | | | | | | | | | | | | | | 3 | | | | | | | | | | |
| | 6 O'Clock | | | | | | | | | | | | | | | 6 | | | | | | | | | | |
| | 9 O'Clock | | | | | | | | | | | | | | | 9 | | | | | | | | | | |
| **ACCURACY %** | 3-2-3 | | | | | | | | | | | | | | | | | C | | | | | | | | |
| **OPTIONS, LIST IN ALPHA-NUMERIC ORDER** | GLASS LENS | | | | | | | | | | | | | | | | | | G | L | | | | | | |
| | SNAP-IN LENS | | | | | | | | | | | | | | | | | | S | I | | | | | | |
| | BLACK STEEL POLISHED RING | | | | | | | | | | | | | | | | | | S | R | | | | | | |
| | CHROME POLISHED RING | | | | | | | | | | | | | | | | | | C | R | | | | | | |
| | U-CLAMP | | | | | | | | | | | | | | | | | | U | C | | | | | | |
| | BLOW-OUT DISK | | | | | | | | | | | | | | | | | | B | D | | | | | | |
| | RESTRICTED ORIFICE | | | | | | | | | | | | | | | | | | R | O | | | | | | |
| | EN-837 ON-DIAL | | | | | | | | | | | | | | | | | | E | N | | | | | | |
| | ASME B40.100 ON-DIAL | | | | | | | | | | | | | | | | | | A | S | | | | | | |
| | NO OIL (HYDROCARBON FREE), ON DIAL | | | | | | | | | | | | | | | | | | H | F | | | | | | |
| | PROTECTIVE RUBBER BOOT | | | | | | | | | | | | | | | | | | P | B | | | | | | |
| | CUSTOM DIAL, SIMPLE | | | | | | | | | | | | | | | | | | C | 1 | | | | | | |
| | CUSTOM DIAL, COMPLEX | | | | | | | | | | | | | | | | | | C | 2 | | | | | | |
| | RED SET POINTER | | | | | | | | | | | | | | | | | | R | S | P | | | | | |
| | ROSH COMPLIANT | | | | | | | | | | | | | | | | | | R | | | | | | | |
| | LEAD FREE, NSF 61/372 COMPLIANT | | | | | | | | | | | | | | | | | | L | F | | | | | | |
| | STABILIZR® | | | | | | | | | | | | | | | | | | Z | R | | | | | | |
| | SPECIAL | | | | | | | | | | | | | | | | | | Z | # | # | # | | | | |

# PFP-ZR Premium Stainless Steel StabiliZR® Gauge

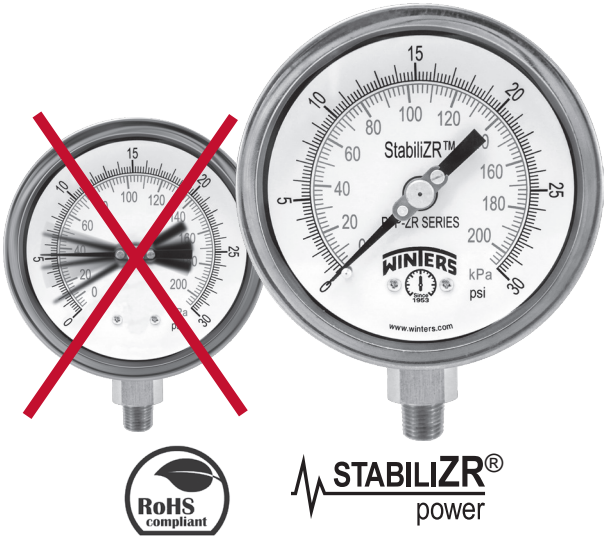


RoHS compliant

STABILIZR® power

## Description & Features:

- StabiliZR® dampened movement minimizes effects of pulsation and vibration as effectively as liquid filled gauges
- Restrictor screw standard on dual scale (optional on single scale)
- Stainless steel case
- Under and overload stops (4” and 6”)
- Back, bottom or panel mounted
- 316L SS wetted parts
- ASME B40.100 compliant (EN837-1 available)
- CRN registered
- 5 year warranty

## Applications:

- Outdoor and severe ambient and process conditions
- Use where harmful vibration and pulsation are present
- Hydraulic equipment, oil field equipment, pumps, compressors and process industries

| Specifications | |
|---|---|
| **Dial** | 2.5” (63mm), 4” (100mm), 6” (150mm) white aluminum with black and red markings |
| **Case** | AISI 304 SS (dry) |
| **Lens** | Polycarbonate |
| **Ring** | AISI 304 SS bayonet |
| **Socket** | 316L SS |
| **Connection** | 2.5” (63mm): 1/4” NPT<br>4” (100mm), 6” (150mm): 1/4”, 1/2” NPT |
| **Bourdon Tube** | 316L SS |
| **Movement** | 304 SS, (under and overload stops 4” and 6”) and StabiliZR® dampened movement (silicone in sealed chamber) |
| **Pointer** | 2.5” (63mm): Aluminum, anodized black<br>4” (100mm), 6” (150mm): Aluminum, anodized black, micrometer adjustable |
| **Welding** | Laser welded socket to case |
| **Over-pressure Limit** | 25% for pressures up to 1,450 psi (9,998 kPa),<br>15% for pressures over 1,450 psi (9,998 kPa) |
| **Lens Ring Gasket** | Buna N |
| **Ambient Temperature** | -76°F to 200°F (-60°C to 93°C) |
| **Process Temperature** | -40°F to 250°F (-40°C to 120°C) |
| **Working Pressure** | Maximum 75% of full scale value |
| **Accuracy** | 2.5” (63mm): ±1.5% of full scale value<br>4” (100mm), 6” (150mm): ±1% ANSI/ASME Grade 1A |
| **Enclosure Rating** | NEMA 4X/IP66, EN60529-1 (IEC529-1) |

## Single Scale Order Codes (products in bold are normally stock in North America)

| Dial Size | 2.5" (63mm) | | 4" (100mm) | | | | 6" (150mm) | |
|---|---|---|---|---|---|---|---|---|
| Connection | 1/4" Bottom | 1/4" Back (CB) | 1/4" Bottom | 1/4" Back (LB) | 1/2" Bottom | 1/2" Back (LB) | 1/4" Bottom | 1/2" Bottom |
| 30" Hg Vac | PFP820ZRR6 | PFP840ZRR6 | PFP640ZRR6 | PFP1090ZRR6 | PFP655ZRR6 | - | PFP1078ZRR6 | PFP2326ZRR6 |
| 30"/0/15 psi | PFP860ZRR1 | PFP870ZRR1 | PFP1036ZRR1 | PFP1244ZRR1 | PFP1044ZRR1 | - | PFP1079ZRR1 | PFP2327ZRR1 |
| 30"/0/30 psi | PFP861ZRR1 | PFP871ZRR1 | PFP1037ZRR1 | PFP1245ZRR1 | PFP1045ZRR1 | - | PFP1052ZRR1 | PFP2328ZRR1 |
| 30"/0/60 psi | PFP862ZRR1 | PFP872ZRR1 | PFP1038ZRR1 | PFP1246ZRR1 | PFP1046ZRR1 | - | PFP1053ZRR1 | PFP2329ZRR1 |
| 30"/0/100 psi | PFP863ZRR1 | PFP873ZRR1 | PFP1039ZRR1 | PFP1247ZRR1 | PFP1047ZRR1 | - | PFP1054ZRR1 | PFP2330ZRR1 |
| 30"/0/150 psi | PFP864ZRR1 | PFP874ZRR1 | PFP1040ZRR1 | PFP1248ZRR1 | PFP1048ZRR1 | - | PFP1055ZRR1 | PFP2331ZRR1 |
| 30"/0/200 psi | PFP866ZRR1 | PFP876ZRR1 | PFP1042ZRR1 | PFP1249ZRR1 | PFP1050ZRR1 | - | PFP1057ZRR1 | PFP2332ZRR1 |
| 30"/0/300 psi | PFP867ZRR1 | PFP877ZRR1 | PFP1043ZRR1 | PFP1250ZRR1 | PFP1051ZRR1 | - | PFP1058ZRR1 | PFP2333ZRR1 |
| 0/15 psi | PFP821ZRR1 | PFP921ZRR1 | PFP641ZRR1 | PFP1091ZRR1 | PFP656ZRR1 | - | PFP1059ZRR1 | PFP2334ZRR1 |
| 0/30 psi | PFP822ZRR1 | PFP922ZRR1 | PFP642ZRR1 | PFP1092ZRR1 | PFP657ZRR1 | - | PFP1060ZRR1 | PFP2335ZRR1 |
| 0/60 psi | PFP823ZRR1 | PFP923ZRR1 | PFP643ZRR1 | PFP1093ZRR1 | PFP658ZRR1 | - | PFP1061ZRR1 | PFP2336ZRR1 |
| 0/100 psi | PFP824ZRR1 | PFP924ZRR1 | PFP644ZRR1 | PFP1094ZRR1 | PFP659ZRR1 | - | PFP1062ZRR1 | PFP2337ZRR1 |
| 0/160 psi | PFP825ZRR1 | PFP925ZRR1 | PFP645ZRR1 | PFP1095ZRR1 | PFP660ZRR1 | - | PFP1063ZRR1 | PFP2338ZRR1 |
| 0/200 psi | PFP826ZRR1 | PFP926ZRR1 | PFP646ZRR1 | PFP1096ZRR1 | PFP661ZRR1 | - | PFP1064ZRR1 | PFP2339ZRR1 |
| 0/300 psi | PFP827ZRR1 | PFP927ZRR1 | PFP647ZRR1 | PFP1097ZRR1 | PFP662ZRR1 | - | PFP1065ZRR1 | PFP2340ZRR1 |
| 0/400 psi | PFP880ZRR1 | PFP881ZRR1 | PFP650ZRR1 | PFP1251ZRR1 | PFP666ZRR1 | - | PFP1077ZRR1 | PFP2341ZRR1 |
| 0/600 psi | PFP828ZRR1 | PFP928ZRR1 | PFP648ZRR1 | PFP1098ZRR1 | PFP663ZRR1 | - | PFP1066ZRR1 | PFP2342ZRR1 |
| 0/1,000 psi | PFP829ZRR1 | PFP929ZRR1 | PFP649ZRR1 | PFP1099ZRR1 | PFP664ZRR1 | - | PFP1067ZRR1 | PFP1080ZRR1 |
| 0/1,500 psi | PFP834ZRR1 | PFP934ZRR1 | - | PFP1252ZRR1 | PFP665ZRR1 | PFP1190ZRR1 | PFP1068ZRR1 | PFP1081ZRR1 |
| 0/2,000 psi | PFP830ZRR1 | PFP930ZRR1 | - | PFP1253ZRR1 | PFP667ZRR1 | PFP1191ZRR1 | PFP1069ZRR1 | PFP1082ZRR1 |
| 0/3,000 psi | PFP831ZRR1 | PFP931ZRR1 | - | PFP1254ZRR1 | PFP668ZRR1 | PFP1192ZRR1 | PFP1070ZRR1 | PFP1083ZRR1 |
| 0/5,000 psi | PFP832ZRR1 | PFP852ZRR1 | - | PFP1255ZRR1 | PFP669ZRR1 | PFP1193ZRR1 | PFP1072ZRR1 | PFP1085ZRR1 |
| 0/6,000 psi | PFP836ZRR1 | PFP851ZRR1 | - | PFP1259ZRR1 | PFP675ZRR1 | PFP1197ZRR1 | - | PFP1089ZRR1 |
| 0/10,000 psi | PFP833ZRR1 | PFP853ZRR1 | - | PFP1256ZRR1 | PFP670ZRR1 | PFP1194ZRR1 | PFP1073ZRR1 | PFP1086ZRR1 |
| 0/15,000 psi | PFP835ZRR1 | PFP855ZRR1 | - | PFP1257ZRR1 | PFP671ZRR1 | PFP1195ZRR1 | PFP1074ZRR1 | PFP1087ZRR1 |
| 0/20,000 psi | PFP837ZRR1 | - | - | PFP1258ZRR1 | PFP672ZRR1 | PFP1196ZRR1 | PFP1075ZRR1 | PFP1088ZRR1 |

Note: Restrictor screws are not standard on single scale gauges

Other ranges and connection sizes available upon request.

## Dual Scale Order Codes (products in bold are normally stock in North America)

| Dial Size | 2.5" (63mm) | | 4" (100mm) | | | | 6" (150mm) | |
|---|---|---|---|---|---|---|---|---|
| Connection | 1/4" Bottom | 1/4" Back (CB) | 1/4" Bottom | 1/4" Back (LB) | 1/2" Bottom | 1/2" Back (LB) | 1/4" Bottom | 1/2" Bottom |
| 30" Hg Vac/kPa | PFP820ZR | PFP840ZR | PFP640ZR | PFP1090ZR | PFP655ZR | PFP2308ZR | PFP1078ZR | PFP2326ZR |
| 30"/0/15 psi/kPa | PFP860ZR | PFP870ZR | PFP1036ZR | PFP1244ZR | PFP1044ZR | PFP2309ZR | PFP1079ZR | PFP2327ZR |
| 30"/0/30 psi/kPa | PFP861ZR | PFP871ZR | PFP1037ZR | PFP1245ZR | PFP1045ZR | PFP2310ZR | PFP1052ZR | PFP2328ZR |
| 30"/0/60 psi/kPa | PFP862ZR | PFP872ZR | PFP1038ZR | PFP1246ZR | PFP1046ZR | PFP2311ZR | PFP1053ZR | PFP2329ZR |
| 30"/0/100 psi/kPa | PFP863ZR | PFP873ZR | PFP1039ZR | PFP1247ZR | PFP1047ZR | PFP2312ZR | PFP1054ZR | PFP2330ZR |
| 30"/0/150 psi/kPa | PFP864ZR | PFP874ZR | PFP1040ZR | PFP1248ZR | PFP1048ZR | PFP2313ZR | PFP1055ZR | PFP2331ZR |
| 30"/0/200 psi/kPa | PFP866ZR | PFP876ZR | PFP1042ZR | PFP1249ZR | PFP1050ZR | PFP2314ZR | PFP1057ZR | PFP2332ZR |
| 30"/0/300 psi/kPa | PFP867ZR | PFP877ZR | PFP1043ZR | PFP1250ZR | PFP1051ZR | PFP2315ZR | PFP1058ZR | PFP2333ZR |
| 0/15 psi/kPa | PFP821ZR | PFP921ZR | PFP641ZR | PFP1091ZR | PFP656ZR | PFP2316ZR | PFP1059ZR | PFP2334ZR |
| 0/30 psi/kPa | **PFP822ZR** | PFP922ZR | **PFP642ZR** | PFP1092ZR | PFP657ZR | PFP2317ZR | PFP1060ZR | PFP2335ZR |
| 0/60 psi/kPa | **PFP823ZR** | **PFP923ZR** | **PFP643ZR** | PFP1093ZR | **PFP658ZR** | PFP2318ZR | PFP1061ZR | PFP2336ZR |
| 0/100 psi/kPa | **PFP824ZR** | **PFP924ZR** | **PFP644ZR** | PFP1094ZR | **PFP659ZR** | PFP2319ZR | PFP1062ZR | PFP2337ZR |
| 0/160 psi/kPa | **PFP825ZR** | **PFP925ZR** | **PFP645ZR** | PFP1095ZR | PFP660ZR | PFP2320ZR | PFP1063ZR | PFP2338ZR |
| 0/200 psi/kPa | **PFP826ZR** | **PFP926ZR** | PFP646ZR | PFP1096ZR | **PFP661ZR** | PFP2321ZR | PFP1064ZR | PFP2339ZR |
| 0/300 psi/kPa | **PFP827ZR** | PFP927ZR | PFP647ZR | PFP1097ZR | PFP662ZR | PFP2322ZR | PFP1065ZR | PFP2340ZR |
| 0/400 psi/kPa | PFP880ZR | PFP881ZR | PFP650ZR | PFP1251ZR | PFP666ZR | PFP2323ZR | PFP1077ZR | PFP2341ZR |
| 0/600 psi/kPa | PFP828ZR | PFP928ZR | PFP648ZR | PFP1098ZR | PFP663ZR | PFP2324ZR | PFP1066ZR | PFP2342ZR |
| 0/1,000 psi/kPa | PFP829ZR | PFP929ZR | PFP649ZR | PFP1099ZR | PFP664ZR | PFP2325ZR | PFP1067ZR | PFP1080ZR |
| 0/1,500 psi/kPa | PFP834ZR | PFP934ZR | PFP2301ZR | PFP1252ZR | PFP665ZR | PFP1190ZR | PFP1068ZR | PFP1081ZR |
| 0/2,000 psi/kPa | PFP830ZR | PFP930ZR | PFP2302ZR | PFP1253ZR | PFP667ZR | PFP1191ZR | PFP1069ZR | PFP1082ZR |
| 0/3,000 psi/kPa | PFP831ZR | PFP931ZR | PFP2303ZR | PFP1254ZR | PFP668ZR | PFP1192ZR | PFP1070ZR | PFP1083ZR |
| 0/5,000 psi/kPa | **PFP832ZR** | PFP852ZR | PFP2304ZR | PFP1255ZR | PFP669ZR | PFP1193ZR | PFP1072ZR | PFP1085ZR |
| 0/6,000 psi/kPa | PFP836ZR | PFP851ZR | PFP2305ZR | PFP1259ZR | PFP675ZR | PFP1197ZR | - | PFP1089ZR |
| 0/10,000 psi/kPa | PFP833ZR | PFP853ZR | PFP2306ZR | PFP1256ZR | PFP670ZR | PFP1194ZR | PFP1073ZR | PFP1086ZR |
| 0/15,000 psi/kPa | PFP835ZR | PFP855ZR | PFP2307ZR | PFP1257ZR | PFP671ZR | PFP1195ZR | PFP1074ZR | PFP1087ZR |
| 0/20,000 psi/kPa | PFP837ZR | - | - | PFP1258ZR | PFP672ZR | PFP1196ZR | PFP1075ZR | PFP1088ZR |

Other ranges and connection sizes available upon request.

## 2.5” Bottom Connection with Back Flange

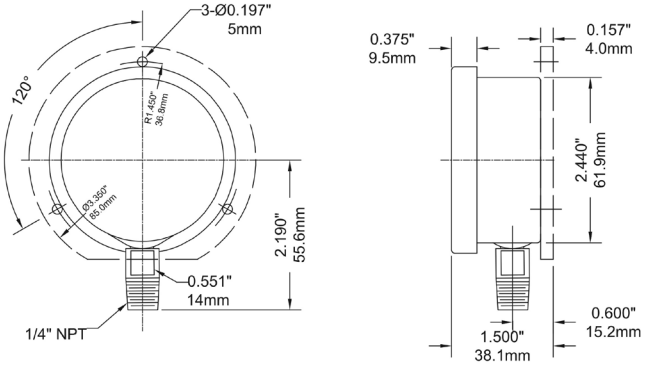


## 2.5” Back Connection with Front Flange

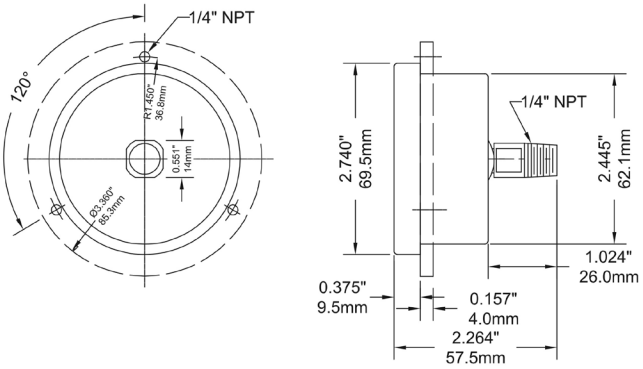


## 2.5” Back Connection with U-Clamp

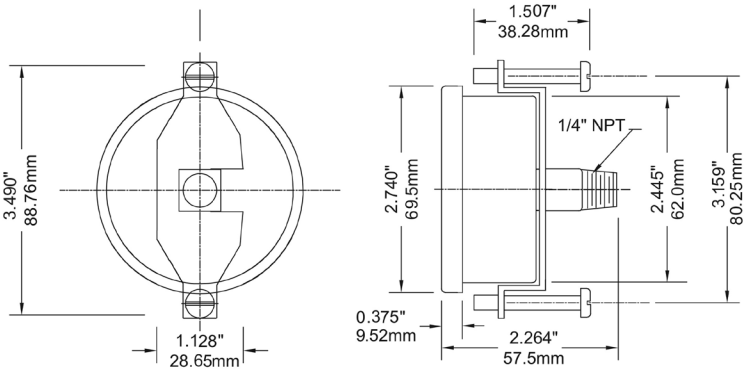


## 4” Bottom Connection with Back Flange

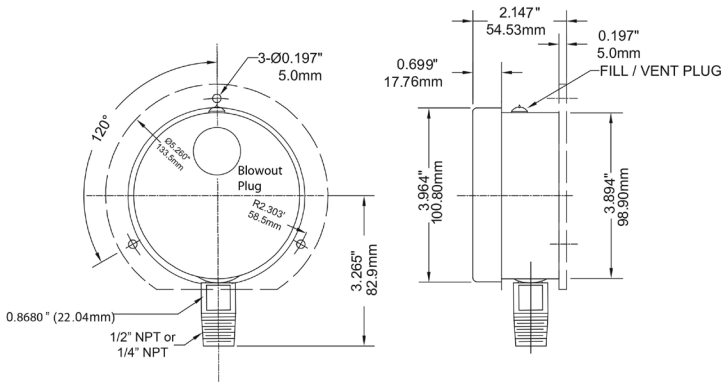


## 4” Lower Back Connection with Front Flange

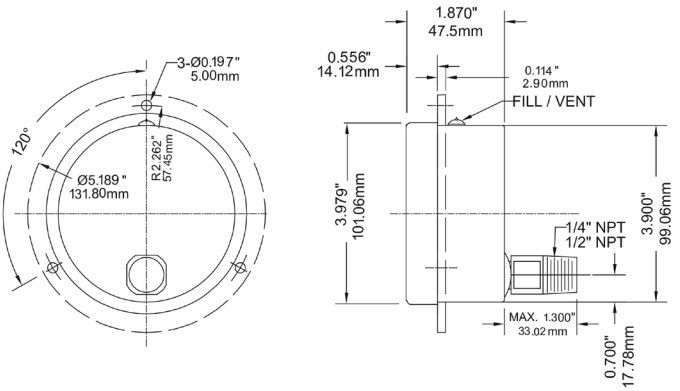

## Engineering Codes

| PFP ENGINEERED PART NUMBER | | P F P - Z R - | | |

# PFQ-ZR | StabiliZR® Stainless Steel Gauge

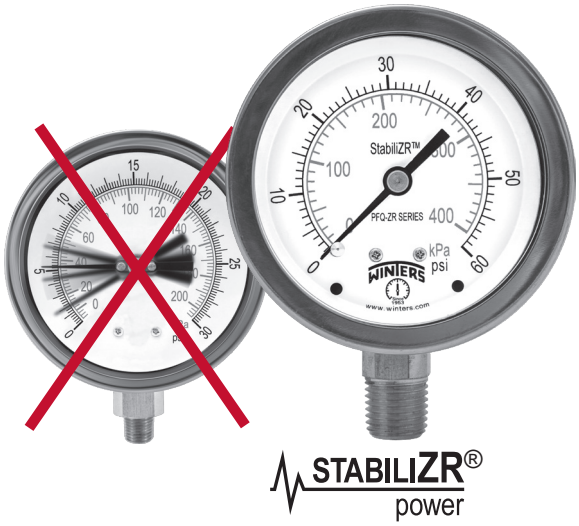


## Description & Features:

- StabiliZR® dampened movement minimizes effects of pulsation and vibration as effectively as liquid filled gauges
- Restricted orifice standard on dual scale
- Crimp-on bezel
- Brass internals
- Dual scale (psi/kPa)
- U-Clamps and front flanges for panel mounting
- ASME B40.100 compliant (EN837-1 available)
- CRN registered
- 5 year warranty

## Applications:

- Ideal for pumps, compressors, hydraulic presses, machinery, pneumatic equipment and motors in harsh environments
- Use where harmful vibration and pulsation are present

| Specifications | |
|---|---|
| **Dial** | 2.5” (63mm) aluminum with red and black markings |
| **Case** | 304 SS (dry) |
| **Lens** | Polycarbonate |
| **Ring** | 304 SS (crimped on) |
| **Socket** | Brass with restricted orifice (dual scale only) |
| **Connection** | 1/4” NPT |
| **Bourdon Tube** | Bronze |
| **Movement** | Brass with StabiliZR® dampened movement (silicone in sealed chamber) |
| **Pointer** | Anodized black aluminum |
| **Over-pressure Limit** | 25% for pressures up to 1,450 psi (9,998 kPa),<br>15% for pressures over 1,450 psi (9,998 kPa) |
| **Socket Gasket** | Buna N for two-piece internal socket seal |
| **Fill Plug** | Buna N |
| **Lens Ring Gasket** | Silicone rubber |
| **Working Pressure** | 75% of full scale value |
| **Ambient Temperature** | -76°F to 200°F (-60°C to 93°C) |
| **Process Temperature** | -40°F to 200°F (-40°C to 93°C) |
| **Accuracy** | ±1.5% of full scale value |
| **Enclosure Rating** | IP65 |
| **Warning** | **WARNING:** This product can expose you to chemicals including lead, which is known to the State of California to cause cancer and birth defects or other reproductive harm. For more information go to www.P65Warnings.ca.gov. |

# PFQ-ZR | StabiliZR® Stainless Steel Gauge

## Single Scale Order Codes

| Dial Size | 2.5" (63mm) | |
|---|---|---|
| Connection | 1/4" Bottom | 1/4" Back (CB) |
| 30" Hg Vac | PFQ801ZRR6 | PFQ900ZRR6 |
| 30"/0/15 psi | PFQ790ZRR1 | PFQ890ZRR1 |
| 30"/0/30 psi | PFQ798ZRR1 | PFQ898ZRR1 |
| 30"/0/60 psi | PFQ799ZRR1 | PFQ899ZRR1 |
| 30"/0/100 psi | PFQ791ZRR1 | PFQ891ZRR1 |
| 30"/0/160 psi | PFQ792ZRR1 | PFQ892ZRR1 |
| 30"/0/200 psi | PFQ794ZRR1 | PFQ894ZRR1 |
| 30"/0/300 psi | PFQ795ZRR1 | PFQ895ZRR1 |
| 0/15 psi | PFQ800ZRR1 | PFQ901ZRR1 |
| 0/30 psi | PFQ802ZRR1 | PFQ902ZRR1 |
| 0/60 psi | **PFQ803ZRR1** | PFQ903ZRR1 |
| 0/100 psi | PFQ804ZRR1 | PFQ904ZRR1 |
| 0/160 psi | PFQ805ZRR1 | PFQ905ZRR1 |
| 0/200 psi | PFQ806ZRR1 | PFQ906ZRR1 |
| 0/300 psi | PFQ807ZRR1 | PFQ907ZRR1 |
| 0/400 psi | PFQ817ZRR1 | PFQ917ZRR1 |
| 0/600 psi | PFQ808ZRR1 | PFQ908ZRR1 |
| 0/1,000 psi | PFQ809ZRR1 | PFQ909ZRR1 |
| 0/1,500 psi | PFQ816ZRR1 | PFQ914ZRR1 |
| 0/2,000 psi | PFQ810ZRR1 | PFQ910ZRR1 |
| 0/3,000 psi | PFQ811ZRR1 | PFQ911ZRR1 |
| 0/5,000 psi | PFQ812ZRR1 | PFQ912ZRR1 |
| 0/6,000 psi | PFQ814ZRR1 | PFQ915ZRR1 |
| 0/7,500 psi | PFQ818ZRR1 | PFQ918ZRR1 |
| 0/10,000 psi | PFQ813ZRR1 | PFQ913ZRR1 |

## Dual Scale Order Codes (products in bold are normally stock in North America)

| Dial Size | 2.5" (63mm) | |
|---|---|---|
| Connection | 1/4" Bottom | 1/4" Back (CB) |
| 30" Hg Vac/kPa | **PFQ801ZR** | **PFQ900ZR** |
| 30"/0/15 psi/kPa | PFQ790ZR | PFQ890ZR |
| 30"/0/30 psi/kPa | **PFQ798ZR** | PFQ898ZR |
| 30"/0/60 psi/kPa | **PFQ799ZR** | PFQ899ZR |
| 30"/0/100 psi/kPa | PFQ791ZR | PFQ891ZR |
| 30"/0/150 psi/kPa | PFQ792ZR | PFQ892ZR |
| 30"/0/200 psi/kPa | PFQ794ZR | PFQ894ZR |
| 30"/0/300 psi/kPa | PFQ795ZR | PFQ895ZR |
| 0/15 psi/kPa | **PFQ800ZR** | PFQ901ZR |
| 0/30 psi/kPa | PFQ802ZR | **PFQ902ZR** |
| 0/60 psi/kPa | **PFQ803ZR** | **PFQ903ZR** |
| 0/100 psi/kPa | **PFQ804ZR** | **PFQ904ZR** |
| 0/160 psi/kPa | **PFQ805ZR** | **PFQ905ZR** |
| 0/200 psi/kPa | **PFQ806ZR** | **PFQ906ZR** |
| 0/300 psi/kPa | **PFQ807ZR** | **PFQ907ZR** |
| 0/400 psi/kPa | PFQ817ZR | PFQ917ZR |
| 0/600 psi/kPa | **PFQ808ZR** | PFQ908ZR |
| 0/1,000 psi/kPa | **PFQ809ZR** | **PFQ909ZR** |
| 0/1,500 psi/kPa | PFQ816ZR | PFQ914ZR |
| 0/2,000 psi/kPa | **PFQ810ZR** | PFQ910ZR |
| 0/3,000 psi/kPa | **PFQ811ZR** | **PFQ911ZR** |
| 0/5,000 psi/kPa | **PFQ812ZR** | **PFQ912ZR** |
| 0/6,000 psi/kPa | PFQ814ZR | PFQ915ZR |
| 0/7,500 psi/kPa | PFQ818ZR | PFQ918ZR |
| 0/10,000 psi/kPa | **PFQ813ZR** | PFQ913ZR |

Note: Restrictor screws are not standard on single scale gauges

Other ranges and connection sizes available upon request.

## 2.5" Bottom Connection with Back Flange

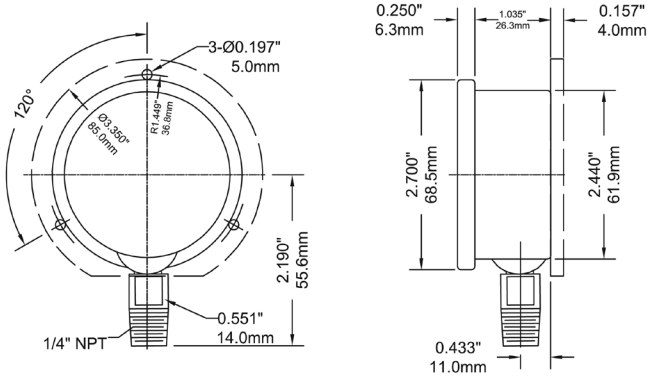


## 2.5" Back Connection with Front Flange

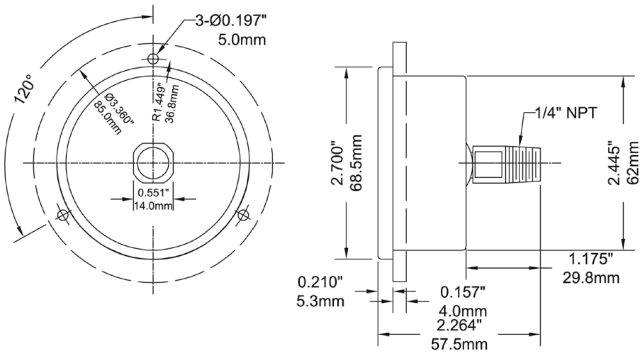

## Single Scale Order Codes

| Dial Size | 4" (100mm) | | | |
|---|---|---|---|---|
| Connection | 1/4" Bottom | 1/4" Back (CB) | 1/2" Bottom | 1/2" Back (CB) |
| 30" Hg Vac | PFQ700ZRR1 | PFQ730ZRR1 | PFQ1234ZRR1 | PFQ1285ZRR1 |
| 30"/0/15 psi | PFQ701ZRR1 | PFQ731ZRR1 | PFQ1235ZRR1 | PFQ1286ZRR1 |
| 30"/0/30 psi | PFQ702ZRR1 | PFQ732ZRR1 | PFQ1236ZRR1 | PFQ1287ZRR1 |
| 30"/0/60 psi | PFQ703ZRR1 | PFQ733ZRR1 | PFQ1237ZRR1 | PFQ1288ZRR1 |
| 30"/0/100 psi | PFQ704ZRR1 | PFQ734ZRR1 | PFQ1238ZRR1 | PFQ1289ZRR1 |
| 30"/0/160 psi | PFQ705ZRR1 | PFQ735ZRR1 | PFQ1239ZRR1 | PFQ1290ZRR1 |
| 30"/0/200 psi | PFQ706ZRR1 | PFQ736ZRR1 | PFQ1240ZRR1 | PFQ1291ZRR1 |
| 30"/0/300 psi | PFQ707ZRR1 | PFQ737ZRR1 | PFQ1241ZRR1 | PFQ1292ZRR1 |
| 0/15 psi | PFQ708ZRR1 | PFQ738ZRR1 | PFQ1242ZRR1 | PFQ1293ZRR1 |
| 0/30 psi | PFQ709ZRR1 | PFQ739ZRR1 | PFQ1243ZRR1 | PFQ1294ZRR1 |
| 0/60 psi | PFQ710ZRR1 | PFQ740ZRR1 | PFQ1244ZRR1 | PFQ1295ZRR1 |
| 0/100 psi | PFQ711ZRR1 | PFQ741ZRR1 | PFQ1245ZRR1 | PFQ1296ZRR1 |
| 0/160 psi | PFQ712ZRR1 | PFQ742ZRR1 | PFQ1246ZRR1 | PFQ1298ZRR1 |
| 0/200 psi | PFQ713ZRR1 | PFQ743ZRR1 | PFQ1247ZRR1 | PFQ1524ZRR1 |
| 0/300 psi | PFQ714ZRR1 | PFQ744ZRR1 | PFQ1248ZRR1 | PFQ1525ZRR1 |
| 0/400 psi | PFQ715ZRR1 | PFQ745ZRR1 | PFQ1249ZRR1 | PFQ1526ZRR1 |
| 0/600 psi | PFQ716ZRR1 | PFQ746ZRR1 | PFQ1250ZRR1 | PFQ1527ZRR1 |
| 0/1,000 psi | PFQ724ZRR1 | PFQ192ZRR1 | PFQ717ZRR1 | PFQ747ZRR1 |
| 0/1,500 psi | PFQ725ZRR1 | PFQ241ZRR1 | PFQ718ZRR1 | PFQ748ZRR1 |
| 0/2,000 psi | PFQ726ZRR1 | PFQ242ZRR1 | PFQ719ZRR1 | PFQ749ZRR1 |
| 0/3,000 psi | PFQ727ZRR1 | PFQ243ZRR1 | PFQ720ZRR1 | PFQ750ZRR1 |
| 0/5,000 psi | PFQ728ZRR1 | PFQ244ZRR1 | PFQ721ZRR1 | PFQ751ZRR1 |
| 0/6,000 psi | PFQ346ZRR1 | PFQ246ZRR1 | PFQ784ZRR1 | PFQ785ZRR1 |
| 0/7,500 psi | PFQ347ZRR1 | PFQ247ZRR1 | PFQ786ZRR1 | PFQ886ZRR1 |
| 0/10,000 psi | PFQ729ZRR1 | PFQ360ZRR1 | PFQ722ZRR1 | PFQ752ZRR1 |
| 0/15,000 psi | PFQ261ZRR1 | PFQ361ZRR1 | PFQ723ZRR1 | PFQ753ZRR1 |

## Dual Scale Order Codes (products in bold are normally stock in North America)

| Dial Size | 4" (100mm) | | | |
|---|---|---|---|---|
| Connection | 1/4" Bottom | 1/4" Back (CB) | 1/2" Bottom | 1/2" Back (CB) |
| 30" Hg Vac/kPa | PFQ700ZR | PFQ730ZR | PFQ1234ZR | PFQ1285ZR |
| 30"/0/15 psi/kPa | PFQ701ZR | PFQ731ZR | PFQ1235ZR | PFQ1286ZR |
| 30"/0/30 psi/kPa | PFQ702ZR | PFQ732ZR | PFQ1236ZR | PFQ1287ZR |
| 30"/0/60 psi/kPa | PFQ703ZR | PFQ733ZR | PFQ1237ZR | PFQ1288ZR |
| 30"/0/100 psi/kPa | PFQ704ZR | PFQ734ZR | PFQ1238ZR | PFQ1289ZR |
| 30"/0/160 psi/kPa | PFQ705ZR | PFQ735ZR | PFQ1239ZR | PFQ1290ZR |
| 30"/0/200 psi/kPa | PFQ706ZR | PFQ736ZR | PFQ1240ZR | PFQ1291ZR |
| 30"/0/300 psi/kPa | PFQ707ZR | PFQ737ZR | PFQ1241ZR | PFQ1292ZR |
| 0/15 psi/kPa | PFQ708ZR | PFQ738ZR | PFQ1242ZR | PFQ1293ZR |
| 0/30 psi/kPa | PFQ709ZR | PFQ739ZR | PFQ1243ZR | PFQ1294ZR |
| 0/60 psi/kPa | PFQ710ZR | PFQ740ZR | PFQ1244ZR | PFQ1295ZR |
| 0/100 psi/kPa | **PFQ711ZR** | PFQ741ZR | PFQ1245ZR | PFQ1296ZR |
| 0/160 psi/kPa | **PFQ712ZR** | PFQ742ZR | **PFQ1246ZR** | PFQ1298ZR |
| 0/200 psi/kPa | **PFQ713ZR** | PFQ743ZR | PFQ1247ZR | PFQ1524ZR |
| 0/300 psi/kPa | **PFQ714ZR** | PFQ744ZR | **PFQ1248ZR** | PFQ1525ZR |
| 0/400 psi/kPa | PFQ715ZR | PFQ745ZR | PFQ1249ZR | PFQ1526ZR |
| 0/600 psi/kPa | PFQ716ZR | PFQ746ZR | PFQ1250ZR | PFQ1527ZR |
| 0/1,000 psi/kPa | PFQ724ZR | PFQ192ZR | PFQ717ZR | PFQ747ZR |
| 0/1,500 psi/kPa | PFQ725ZR | PFQ241ZR | PFQ718ZR | PFQ748ZR |
| 0/2,000 psi/kPa | PFQ726ZR | PFQ242ZR | PFQ719ZR | PFQ749ZR |
| 0/3,000 psi/kPa | PFQ727ZR | PFQ243ZR | PFQ720ZR | PFQ750ZR |
| 0/5,000 psi/kPa | PFQ728ZR | PFQ244ZR | PFQ721ZR | PFQ751ZR |
| 0/6,000 psi/kPa | PFQ346ZR | PFQ246ZR | PFQ784ZR | PFQ785ZR |
| 0/7,500 psi/kPa | PFQ347ZR | PFQ247ZR | PFQ786ZR | PFQ886ZR |
| 0/10,000 psi/kPa | PFQ729ZR | PFQ360ZR | PFQ722ZR | PFQ752ZR |
| 0/15,000 psi/kPa | PFQ261ZR | PFQ361ZR | PFQ723ZR | PFQ753ZR |

Note: Restrictor screws are not standard on single scale gauges

Other ranges and connection sizes available upon request.

# PFQ-ZR StabiliZR® Stainless Steel Gauge

## Engineering Codes

| PFQ-ZR ENGINEERED PART NUMBER | | P F Q - Z R - | | | | - | | - | | - | | - | | - | | - | |
|---|---|---|---|---|---|---|---|---|---|---|---|---|---|---|---|---|---|
| **DIAL SIZE** | 1.5" (40MM) | | 1 | 5 | | | | | | | | | | | | | |
| | 2.0" (50MM) | | 2 | 0 | | | | | | | | | | | | | |
| | 2.5" (63mm) | | 2 | 5 | | | | | | | | | | | | | |
| | 4" (100mm) | | 4 | 0 | | | | | | | | | | | | | |
| | 6" (160mm) | | 6 | 0 | | | | | | | | | | | | | |
| **PRESSURE SCALE & RANGE** | SEE PRESSURE RANGES BELOW | | | | # | # | # | | | | | | | | | | |
| **CASE MATERIAL** | 304SS | | | | | | | S | | | | | | | | | |
| | 316SS | | | | | | | S | S | | | | | | | | |
| **WETTED PARTS** | BRASS/BRONZE | | | | | | | | | B | R | | | | | | |
| | 316L | | | | | | | | | S | S | | | | | | |
| **PROCESS CONNECTION SIZE** | 1/4" | | | | | | | | | | | N | 4 | | | | |
| | 3/8" | | | | | | | | | | | N | 3 | | | | |
| | 1/2" | | | | | | | | | | | N | 2 | | | | |
| | 7/16"-20 SAE | | | | | | | | | | | S | 7 | | | | |
| **PROCESS CONNECTION TYPE** | NPT | | | | | | | | | | | | | N | | | |
| | SAE | | | | | | | | | | | | | S | | | |
| | BSP (G) | | | | | | | | | | | | | G | | | |
| | BSPT (R) | | | | | | | | | | | | | R | | | |
| | BSPT (spigot) | | | | | | | | | | | | | B | | | |
| | M14*1.5 | | | | | | | | | | | | | M | 4 | | |
| | M20*1.5 | | | | | | | | | | | | | M | 2 | | |
| **PROCESS CONNECTION LOCATION** | Bottom, Stem | | | | | | | | | | | | | | | B | |
| | Centre Back | | | | | | | | | | | | | | | C | B |
| | 12 O'Clock | | | | | | | | | | | | | | | 1 | 2 |
| | 3 O'Clock | | | | | | | | | | | | | | | 3 | |
| | 6 O'Clock | | | | | | | | | | | | | | | 6 | |
| | 9 O'Clock | | | | | | | | | | | | | | | 9 | |
| **ACCURACY %** | 1.5 | | | | | | | | | | | | | | | | H |
| | 2.5 | | | | | | | | | | | | | | | | D |
| **OPTIONS, LIST IN ALPHA-NUMERIC ORDER** | DRY CASE | | | | | | | | | | | | | | | | D R Y |
| | POLYCARBONATE LENS | | | | | | | | | | | | | | | | P L |
| | GLASS LENS | | | | | | | | | | | | | | | | G L |
| | SAFETY GLASS, LAMINATED | | | | | | | | | | | | | | | | S G |
| | SNAP-IN LENS | | | | | | | | | | | | | | | | S I |
| | FRONT FLANGE | | | | | | | | | | | | | | | | F F |
| | BACK FLANGE | | | | | | | | | | | | | | | | B F |
| | U-CLAMP | | | | | | | | | | | | | | | | U C |
| | 316SS POLISHED RING | | | | | | | | | | | | | | | | 6 R |
| | RESTRICTOR SCREW | | | | | | | | | | | | | | | | R S |
| | RESTRICTED ORIFICE | | | | | | | | | | | | | | | | R O |
| | NO RESTRICTOR SCREW / ORIFICE | | | | | | | | | | | | | | | | N R |
| | MOVEMENT 316SS | | | | | | | | | | | | | | | | M S |
| | EN-837 ON-DIAL | | | | | | | | | | | | | | | | E N |
| | ASME B40.100 ON-DIAL | | | | | | | | | | | | | | | | A S |
| | PROTECTIVE RUBBER BOOT | | | | | | | | | | | | | | | | P B |
| | CUSTOM DIAL, SIMPLE | | | | | | | | | | | | | | | | C 1 |
| | CUSTOM DIAL, COMPLEX | | | | | | | | | | | | | | | | C 2 |
| | WINBRIGHT DIAL REFLECTIVE FLUORESCENT YELLOW-GREEN | | | | | | | | | | | | | | | | W B Y G |
| | WINBRIGHT DIAL REFLECTIVE FLUORESCENT YELLOW | | | | | | | | | | | | | | | | W B Y |
| | WINBRIGHT DIAL FLUORESCENT YELLOW | | | | | | | | | | | | | | | | W B F Y |
| | WINBRIGHT DIAL REFLECTIVE ORANGE | | | | | | | | | | | | | | | | W B O |
| | WINBRIGHT DIAL REFLECTIVE WHITE | | | | | | | | | | | | | | | | W B W |
| | WINBRIGHT DIAL GLOW-IN-THE-DARK WHITE | | | | | | | | | | | | | | | | W B G |
| | MAXIMUM ADJUSTABLE POINTER | | | | | | | | | | | | | | | | M A X |
| | MINIMUM ADJUSTABLE POINTER | | | | | | | | | | | | | | | | M I N |
| | RED SET POINTER | | | | | | | | | | | | | | | | R S P |
| | ROSH COMPLIANT | | | | | | | | | | | | | | | | R |
| | LEAD FREE, NSF 61/372 COMPLIANT | | | | | | | | | | | | | | | | L F |
| | NACE COMPLIANT | | | | | | | | | | | | | | | | N |
| | STABILIZR® | | | | | | | | | | | | | | | | Z R |
| | SPECIAL | | | | | | | | | | | | | | | | Z # # # |

# PN2-ZR | NACE StabiliZR® Gauge - MR0175-2002

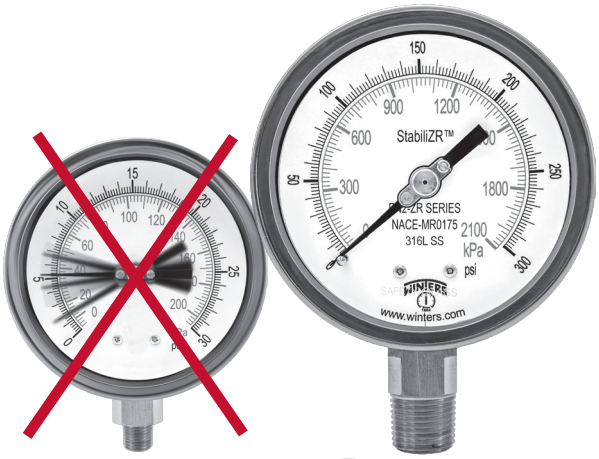


## Description & Features:

- Designed for sour gas applications requiring NACE Standards MR0175-2002 (NACE Standards MR0103-2003 available)
- StabiliZR® dampened movement minimizes effects of pulsation and vibration as effectively as liquid filled gauges
- Blow out back plug
- Under and overload stops
- Wetted parts meet hardness requirements
- ASME B40.100 compliant (EN837-1 available)
- CRN registered
- 5 year warranty

## Applications:

- Sour gas applications requiring gauges that meet NACE International Standards

RoHS compliant

STABILIZR® power

| Specifications | |
|---|---|
| **Dial** | 4” (100mm) aluminum with black and red markings |
| **Case** | 304 SS (dry) |
| **Lens** | Laminated safety glass |
| **Ring** | 304 SS, bayonet |
| **Socket** | 316L SS |
| **Connection** | 1/2” NPT bottom |
| **Bourdon Tube** | 316L SS |
| **Movement** | 304 SS with under and overload stops and StabiliZR® dampened movement (silicone in sealed chamber) |
| **Pointer** | Aluminum, anodized black, micrometer adjustable |
| **Over-Pressure Limit** | 25% for pressures up to 1,450 psi (9,998 kPa),<br>15% for pressures over 1,450 psi (9,998 kPa) |
| **Ambient Temperature** | -76°F to 200°F (-60°C to 93°C) |
| **Process Temperature** | -40°F to 250°F (-40°C to 120°C) |
| **Accuracy** | ±1% ANSI/ASME Grade 1A |
| **Enclosure Rating** | IP66 |

## Order Codes

| Dial Size | 4” (100mm) |
|---|---|
| Connection | 1/2” Bottom |
| 30” Hg Vac/kPa | PN2655ZR |
| 30”/0/15 psi/kPa | PN21044ZR |
| 30”/0/30 psi/kPa | PN21045ZR |
| 30”/0/60 psi/kPa | PN21046ZR |
| 30”/0/100 psi/kPa | PN21047ZR |
| 30”/0/150 psi/kPa | PN21048ZR |
| 30”/0/200 psi/kPa | PN21050ZR |
| 30”/0/300 psi/kPa | PN21051ZR |
| 0/15 psi/kPa | PN2656ZR |
| 0/30 psi/kPa | PN2657ZR |
| 0/60 psi/kPa | PN2658ZR |
| 0/100 psi/kPa | PN2659ZR |
| 0/160 psi/kPa | PN2660ZR |
| 0/200 psi/kPa | PN2661ZR |
| 0/300 psi/kPa | PN2662ZR |
| 0/400 psi/kPa | PN2666ZR |
| 0/600 psi/kPa | PN2663ZR |
| 0/1,000 psi/kPa | PN2664ZR |
| 0/1,500 psi/kPa | PN2665ZR |
| 0/2,000 psi/kPa | PN2667ZR |
| 0/3,000 psi/kPa | PN2668ZR |
| 0/5,000 psi/kPa | PN2669ZR |
| 0/6,000 psi/kPa | PN2675ZR |
| 0/10,000 psi/kPa | PN2670ZR |
| 0/15,000 psi/kPa | PN2671ZR |
| 0/20,000 psi/kPa | PN2672ZR |

Other ranges and connection sizes available upon request.

## 4” Bottom Connection

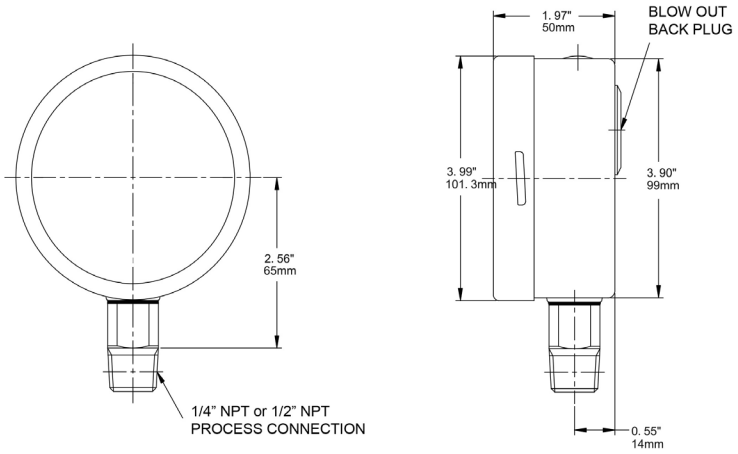

## Engineering Codes

| PN2-ZR ENGINEERED PART NUMBER | | P N 2 - Z R - | | | | - | | | - | | | -

# PPC-ZR StabiliZR® Process Gauge

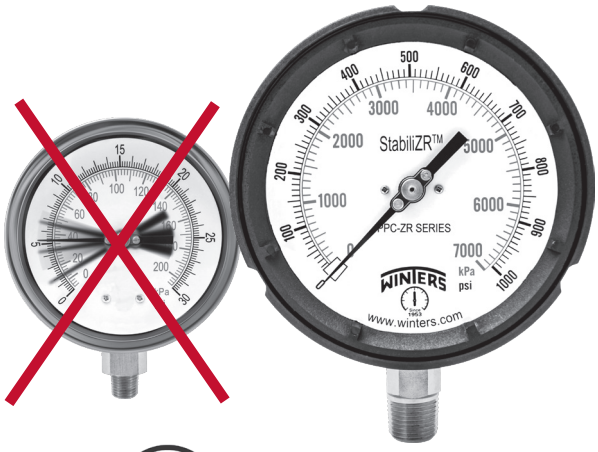


RoHS compliant

STABILIZR® power

Note; RoHS applies to SS and Monel® internals only

## Description & Features:

- StabiliZR® dampened movement minimizes effects of pulsation and vibration as effectively as liquid filled gauges
- Solid phenolic front and polypropylene pressure relief back safety case
- ±0.5% accuracy
- Stainless steel full rotary movement
- Micrometer adjustable pointer for ease in calibration
- Under and overload stops
- 316L stainless steel or brass wetted parts standard
- Restricted orifice standard on dual scale (optional on single scale)
- ASME B40.100 compliant
- CRN registered
- 5 year warranty

## Applications:

- Ideally suited for process, chemical, petroleum and power industries
- Suitable for non-clogging corrosive media
- Used where operator safety is a requirement
- Processes where pulsation and vibration exist

| Specifications | Stainless Steel Internals | Brass Internals |
|---|---|---|
| Dial | 4.5” (115mm) aluminum with black and red markings | 4.5” (115mm) white aluminum with black and red markings |
| Case | Black phenolic with pressure relief back, solid front, integral back flange | Black phenolic with pressure relief back, solid front, integral back flange |
| Solid Wall | Phenolic | Phenolic |
| Pressure Relief Back | Polypropylene | Polypropylene |
| Window | Polycarbonate | Polycarbonate |
| Ring | Phenolic | Phenolic |
| Pointer | Aluminum, anodized black, micrometer adjustable | Aluminum, anodized black, micrometer adjustable |
| Socket | 316L SS | OT 58 brass |
| Connection | 1/4” or 1/2” NPT standard, bottom or back | 1/4” NPT or 1/2” NPT standard, bottom or back |
| Bourdon Tube | 316L SS, drawn seamless | Phosphor bronze |
| Movement | 304 SS with under and overload stops and StabiliZR® dampened movement (silicone in sealed chamber) | 304 SS with under and overload stops and StabiliZR® dampened movement (silicone in sealed chamber) |
| Gasket Materials | Dry & glycerin filled gauges: Black NBR<br>Silicone filled gauges: Brown NBR | Dry & glycerin filled gauges: Black NBR<br>Silicone filled gauges: Brown NBR |
| Welding | TIG | Silver alloy |
| Over-pressure Limit | 25% for pressures below 1,500 psi (10,341 kPa),<br>15% for pressures 1,500 to 8,700 psi<br>(10,341 kPa to 59,984 kPa),<br>10% for pressures above 8,700 psi (59,984 kPa) | 25% for pressures below 1,500 psi (10,341 kPa),<br>15% for pressures 1,500 to 8,700 psi<br>(10,341 kPa to 59,984 kPa),<br>10% for pressures above 8,700 psi (59,984 kPa) |
| Working Pressure | Maximum 75% of full scale value | Maximum 75% of full scale value |
| Ambient Temperature | -76°F to 200°F (-60°C to 93°C) | -76°F to 200°F (-60°C to 93°C) |
| Process Temperature | -40°F to 250°F (-40°C to 120°C) | -40°F to 150°F (-40°C to 65°C) |
| Accuracy | ±0.5% ANSI/ASME Grade 2A | ±0.5% ANSI/ASME Grade 2A |
| Enclosure Rating | IP65 | IP65 |
| Warning (brass internals only) | N/A | ⚠ **WARNING:** This product can expose you to chemicals including lead, which is known to the State of California to cause cancer and birth defects or other reproductive harm. For more information go to www.P65Warnings.ca.gov. |

## Single Scale Order Codes (products in bold are normally stock in North America)

| Connection | 1/4" Bottom | 1/4" Back (LB) | 1/4" Bottom | 1/4" Back (LB) | 1/2" Bottom | 1/2" Back (LB) |
|---|---|---|---|---|---|---|
| Socket, Tube | Brass | | SS | | | |
| 30" Hg Vac | PPC5080ZRR6 | PPC5280ZRR6 | PPC5040ZRR6 | PPC5340ZRR6 | PPC5060ZRR6 | PPC5460ZRR6 |
| 30"/0/15 psi | PPC5120ZRR1 | PPC5220ZRR1 | PPC5130ZRR1 | PPC5330ZRR1 | PPC5140ZRR1 | PPC5440ZRR1 |
| 30"/0/30 psi | PPC5121ZRR1 | PPC5221ZRR1 | PPC5131ZRR1 | PPC5331ZRR1 | PPC5141ZRR1 | PPC5441ZRR1 |
| 30"/0/60 psi | PPC5122ZRR1 | PPC5222ZRR1 | PPC5132ZRR1 | PPC5332ZRR1 | PPC5142ZRR1 | PPC5442ZRR1 |
| 30"/0/100 psi | PPC5123ZRR1 | PPC5223ZRR1 | PPC5133ZRR1 | PPC5333ZRR1 | PPC5143ZRR1 | PPC5443ZRR1 |
| 30"/0/160 psi | PPC5124ZRR1 | PPC5224ZRR1 | PPC5134ZRR1 | PPC5334ZRR1 | PPC5144ZRR1 | PPC5444ZRR1 |
| 30"/0/200 psi | PPC5125ZRR1 | PPC5225ZRR1 | PPC5135ZRR1 | PPC5335ZRR1 | PPC5145ZRR1 | PPC5445ZRR1 |
| 30"/0/300 psi | PPC5126ZRR1 | PPC5226ZRR1 | PPC5136ZRR1 | PPC5336ZRR1 | PPC5146ZRR1 | PPC5446ZRR1 |
| 0/15 psi | PPC5081ZRR1 | PPC5281ZRR1 | PPC5041ZRR1 | PPC5341ZRR1 | PPC5061ZRR1 | PPC5461ZRR1 |
| 0/30 psi | PPC5082ZRR1 | PPC5282ZRR1 | PPC5042ZRR1 | PPC5342ZRR1 | PPC5062ZRR1 | PPC5462ZRR1 |
| 0/60 psi | PPC5083ZRR1 | PPC5283ZRR1 | PPC5043ZRR1 | PPC5343ZRR1 | PPC5063ZRR1 | PPC5463ZRR1 |
| 0/100 psi | PPC5084ZRR1 | PPC5284ZRR1 | PPC5044ZRR1 | PPC5344ZRR1 | **PPC5064ZRR1** | PPC5464ZRR1 |
| 0/160 psi | PPC5085ZRR1 | PPC5285ZRR1 | PPC5045ZRR1 | PPC5345ZRR1 | **PPC5065ZRR1** | PPC5465ZRR1 |
| 0/200 psi | PPC5086ZRR1 | PPC5286ZRR1 | PPC5046ZRR1 | PPC5346ZRR1 | **PPC5066ZRR1** | PPC5466ZRR1 |
| 0/300 psi | PPC5087ZRR1 | PPC5287ZRR1 | PPC5047ZRR1 | PPC5347ZRR1 | **PPC5067ZRR1** | PPC5467ZRR1 |
| 0/400 psi | PPC5088ZRR1 | PPC5288ZRR1 | PPC5048ZRR1 | PPC5348ZRR1 | **PPC5068ZRR1** | PPC5468ZRR1 |
| 0/600 psi | PPC5089ZRR1 | PPC5289ZRR1 | PPC5049ZRR1 | PPC5349ZRR1 | **PPC5069ZRR1** | PPC5469ZRR1 |
| 0/800 psi | - | - | PPC5058ZRR1 | PPC5358ZRR1 | **PPC5078ZRR1** | PPC5478ZRR1 |
| 0/1,000 psi | PPC5098ZRR1 | PPC5298ZRR1 | PPC5050ZRR1 | PPC5350ZRR1 | **PPC5070ZRR1** | PPC5470ZRR1 |
| **Connection** | **1/2" Bottom** | **1/2" Back (LB)** | **1/4" Bottom** | **1/4" Back (LB)** | **1/2" Bottom** | **1/2" Back (LB)** |
| 0/1,000 psi | PPC5188ZRR1 | PPC5290ZRR1 | PPC5050ZRR1 | PPC5350ZRR1 | PPC5070ZRR1 | PPC5470ZRR1 |
| 0/1,500 psi | PPC5091ZRR1 | PPC5291ZRR1 | PPC5051ZRR1 | PPC5351ZRR1 | PPC5071ZRR1 | PPC5471ZRR1 |
| 0/2,000 psi | PPC5092ZRR1 | PPC5292ZRR1 | PPC5052ZRR1 | PPC5352ZRR1 | **PPC5072ZRR1** | PPC5472ZRR1 |
| 0/3,000 psi | PPC5093ZRR1 | PPC5293ZRR1 | PPC5053ZRR1 | PPC5353ZRR1 | PPC5073ZRR1 | PPC5473ZRR1 |
| 0/5,000 psi | PPC5094ZRR1 | PPC5294ZRR1 | PPC5054ZRR1 | PPC5354ZRR1 | **PPC5074ZRR1** | PPC5474ZRR1 |
| 0/10,000 psi | PPC5095ZRR1 | PPC5295ZRR1 | PPC5055ZRR1 | PPC5355ZRR1 | PPC5075ZRR1 | PPC5475ZRR1 |
| 0/15,000 psi | PPC5096ZRR1 | PPC5296ZRR1 | PPC5056ZRR1 | PPC5356ZRR1 | PPC5076ZRR1 | PPC5476ZRR1 |
| 0/20,000 psi | PPC5097ZRR1 | PPC5297ZRR1 | PPC5057ZRR1 | PPC5357ZRR1 | PPC5077ZRR1 | PPC5477ZRR1 |

Note: Restrictor screws are not standard on single scale gauges

Other ranges and connection sizes available upon request.

### 4.5" Bottom Connection

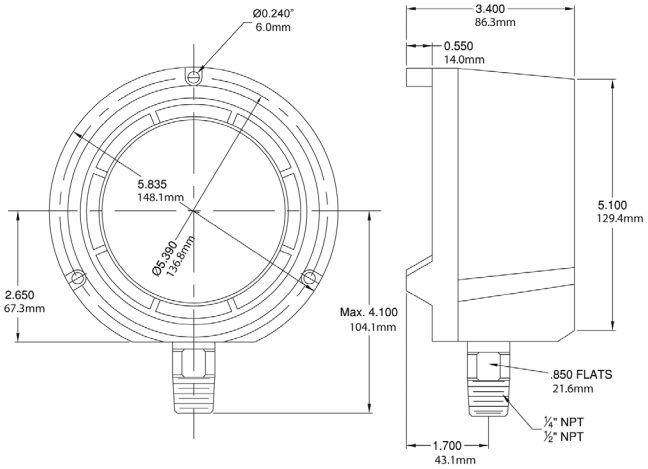


### 4.5" Back Connection

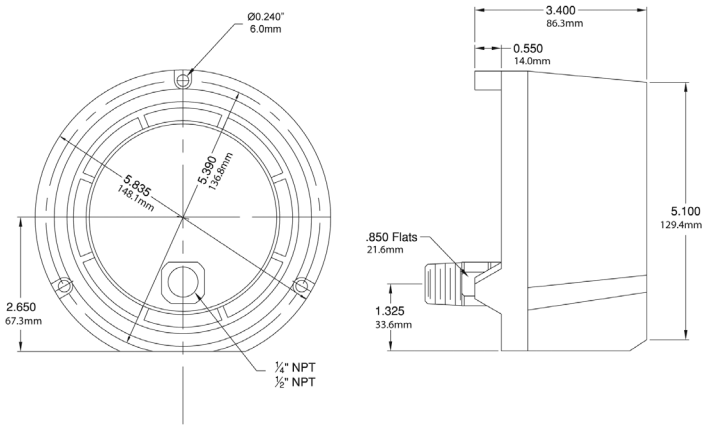

## Dual Scale Order Codes (products in bold are normally stock in North America)

| Connection | 1/4" Bottom | 1/4" Back (LB) | 1/4" Bottom | 1/4" Back (LB) | 1/2" Bottom | 1/2" Back (LB) |
|---|---|---|---|---|---|---|
| Socket, Tube | Brass | | SS | | | |
| 30" Hg Vac/kPa | PPC5080ZR | PPC5280ZR | PPC5040ZR | PPC5340ZR | PPC5060ZR | PPC5460ZR |
| 30"/0/15 psi/kPa | PPC5120ZR | PPC5220ZR | PPC5130ZR | PPC5330ZR | PPC5140ZR | PPC5440ZR |
| 30"/0/30 psi/kPa | PPC5121ZR | PPC5221ZR | PPC5131ZR | PPC5331ZR | PPC5141ZR | PPC5441ZR |
| 30"/0/60 psi/kPa | PPC5122ZR | PPC5222ZR | PPC5132ZR | PPC5332ZR | PPC5142ZR | PPC5442ZR |
| 30"/0/100 psi/kPa | PPC5123ZR | PPC5223ZR | PPC5133ZR | PPC5333ZR | PPC5143ZR | PPC5443ZR |
| 30"/0/160 psi/kPa | PPC5124ZR | PPC5224ZR | PPC5134ZR | PPC5334ZR | PPC5144ZR | PPC5444ZR |
| 30"/0/200 psi/kPa | PPC5125ZR | PPC5225ZR | PPC5135ZR | PPC5335ZR | PPC5145ZR | PPC5445ZR |
| 30"/0/300 psi/kPa | PPC5126ZR | PPC5226ZR | PPC5136ZR | PPC5336ZR | PPC5146ZR | PPC5446ZR |
| 0/15 psi/kPa | PPC5081ZR | PPC5281ZR | PPC5041ZR | PPC5341ZR | PPC5061ZR | PPC5461ZR |
| 0/30 psi/kPa | PPC5082ZR | PPC5282ZR | PPC5042ZR | PPC5342ZR | PPC5062ZR | PPC5462ZR |
| 0/60 psi/kPa | PPC5083ZR | PPC5283ZR | PPC5043ZR | PPC5343ZR | PPC5063ZR | PPC5463ZR |
| 0/100 psi/kPa | PPC5084ZR | PPC5284ZR | PPC5044ZR | PPC5344ZR | PPC5064ZR | PPC5464ZR |
| 0/160 psi/kPa | PPC5085ZR | PPC5285ZR | PPC5045ZR | PPC5345ZR | **PPC5065ZR** | PPC5465ZR |
| 0/200 psi/kPa | PPC5086ZR | PPC5286ZR | PPC5046ZR | PPC5346ZR | PPC5066ZR | PPC5466ZR |
| 0/300 psi/kPa | PPC5087ZR | PPC5287ZR | PPC5047ZR | PPC5347ZR | PPC5067ZR | PPC5467ZR |
| 0/400 psi/kPa | PPC5088ZR | PPC5288ZR | PPC5048ZR | PPC5348ZR | PPC5068ZR | PPC5468ZR |
| 0/600 psi/kPa | PPC5089ZR | PPC5289ZR | PPC5049ZR | PPC5349ZR | PPC5069ZR | PPC5469ZR |
| 0/800 psi/kPa | PPC5099ZR | PPC5299ZR | PPC5058ZR | PPC5358ZR | PPC5078ZR | PPC5478ZR |
| 0/1,000 psi/kPa | PPC5098ZR | PPC5298ZR | PPC5050ZR | PPC5350ZR | PPC5070ZR | PPC5470ZR |
| **Connection** | **1/2"** | **1/2"** | **1/4"** | **1/4"** | **1/2"** | **1/2"** |
| 0/800 psi/kPa | PPC5188ZR | PPC5198ZR | PPC5058ZR | PPC5358ZR | PPC5078ZR | PPC5478ZR |
| 0/1,000 psi/kPa | PPC5090ZR | PPC5290ZR | PPC5050ZR | PPC5350ZR | PPC5070ZR | PPC5470ZR |
| 0/1,500 psi/kPa | PPC5091ZR | PPC5291ZR | PPC5051ZR | PPC5351ZR | PPC5071ZR | PPC5471ZR |
| 0/2,000 psi/kPa | PPC5092ZR | PPC5292ZR | PPC5052ZR | PPC5352ZR | PPC5072ZR | PPC5472ZR |
| 0/3,000 psi/kPa | PPC5093ZR | PPC5293ZR | PPC5053ZR | PPC5353ZR | PPC5073ZR | PPC5473ZR |
| 0/5,000 psi/kPa | PPC5094ZR | PPC5294ZR | PPC5054ZR | PPC5354ZR | PPC5074ZR | PPC5474ZR |
| 0/10,000 psi/kPa | PPC5095ZR | PPC5295ZR | PPC5055ZR | PPC5355ZR | PPC5075ZR | PPC5475ZR |
| 0/15,000 psi/kPa | PPC5096ZR | PPC5296ZR | PPC5056ZR | PPC5356ZR | PPC5076ZR | PPC5476ZR |
| 0/20,000 psi/kPa | PPC5097ZR | PPC5297ZR | PPC5057ZR | PPC5357ZR | PPC5077ZR | PPC5477ZR |

Other ranges and connection sizes available upon request.

## Engineering Codes

| PPC-ZR ENGINEERED PART NUMBER | | P P C - Z R | - | - | - | - | - | - | - | - |
|---|---|---|---|---|---|---|---|---|---|---|
| **DIAL SIZE** | 4.5" (115mm) | 4 5 | | | | | | | | |
| **PRESSURE SCALE & RANGE** | SEE PRESSURE RANGES BELOW | | # # # | | | | | | | |
| **CASE MATERIAL** | PHENOLIC | | | P H | | | | | | |
| **WETTED PARTS** | BRASS/BRONZE | | | | B R | | | | | |
| | 316L | | | | S L | | | | | |
| | MONEL | | | | M | | | | | |
| **PROCESS CONNECTION SIZE** | 1/4" | | | | | N 4 | | | | |
| | 1/2" | | | | | N 2 | | | | |
| **PROCESS CONNECTION TYPE** | NPT | | | | | | N | | | |
| | BSP (G) | | | | | | G | | | |
| | BSPT (R) | | | | | | R | | | |
| **PROCESS CONNECTION LOCATION** | Bottom, Stem | | | | | | | B | | |
| | Lower Back | | | | | | | L B | | |
| **ACCURACY %** | 0.5 | | | | | | | | K | |
| **OPTIONS, LIST IN ALPHA-NUMERIC ORDER** | POLYCARBONATE LENS | | | | | | | | | P L |
| | GLASS LENS | | | | | | | | | G L |
| | SAFETY GLASS, LAMINATED | | | | | | | | | S G |
| | SAFETY GLASS, TEMPERED | | | | | | | | | T G |
| | FLUSH MOUNTING RING | | | | | | | | | F M R |
| | SOLID FRONT HINGED CASE | | | | | | | | | H C S F |
| | RESTRICTOR SCREW | | | | | | | | | R S |
| | RESTRICTED ORIFICE, BRASS | | | | | | | | | R O |
| | NO RESTRICTOR SCREW / ORIFICE | | | | | | | | | N R |
| | MOVEMENT 316SS | | | | | | | | | M S |
| | MOVEMENT 316L | | | | | | | | | M L |
| | ASME B40.100 ON-DIAL | | | | | | | | | A S |
| | CUSTOM DIAL, SIMPLE | | | | | | | | | C 1 |
| | CUSTOM DIAL, COMPLEX | | | | | | | | | C 2 |
| | WINBRIGHT DIAL REFLECTIVE FLUORESCENT YELLOW-GREEN | | | | | | | | | W B Y G |
| | WINBRIGHT DIAL REFLECTIVE FLUORESCENT YELLOW | | | | | | | | | W B Y |
| | WINBRIGHT DIAL FLUORESCENT YELLOW | | | | | | | | | W B F Y |
| | WINBRIGHT DIAL REFLECTIVE ORANGE | | | | | | | | | W B O |
| | WINBRIGHT DIAL REFLECTIVE WHITE | | | | | | | | | W B W |
| | WINBRIGHT DIAL GLOW-IN-THE-DARK WHITE | | | | | | | | | W B G |
| | MAXIMUM ADJUSTABLE POINTER | | | | | | | | | M A X |
| | MINIMUM ADJUSTABLE POINTER | | | | | | | | | M I N |
| | RED SET POINTER | | | | | | | | | R S P |
| | ROSH COMPLIANT | | | | | | | | | R |
| | NACE COMPLIANT | | | | | | | | | N |
| | LEAD FREE, NSF 61/372 COMPLIANT | | | | | | | | | L F |
| | STABILIZR® | | | | | | | | | Z R |
| | SPECIAL | | | | | | | | | Z # # # |

# P1S 100 Series Gauge




1. Optional Front Flange
2. Optional Back Flange

## Description & Features:

- High quality, commercial grade gauge at an economical price
- ±1% accuracy
- Steel and aluminum cases
- Brass wetted parts
- ASME B40.100 compliant (EN837-1 available)
- CRN registered
- 5 year warranty

## Applications:

- Commercial installations, plumbing, heating and cooling

| Specifications | |
|---|---|
| **Dial** | 3.5” (90mm), 4” (100mm), 4.5” (115mm), 6” (150mm) white aluminum with black and red markings |
| **Case** | 3.5” (90mm), 4” (100mm): Steel painted black<br>4.5” (115mm): Aluminum<br>6” (150mm) Bottom: Steel painted black<br>6” (150mm) Back: Aluminum |
| **Lens** | 3.5” (90mm), 4.5” (115mm) Bottom connection, 6” (150mm): Glass<br>4” (100mm), 4.5” (115mm) Back connection: Polycarbonate |
| **Ring** | 3.5” (90mm), 4” (100mm), 4.5” (115mm) Bottom connection: Polished brass<br>6” (150mm) Bottom connection: Steel painted black<br>4.5” (115mm) Back connection, 6” (150mm) back connection: SS, polished |
| **Socket** | Brass |
| **Connection** | 1/4” NPT standard |
| **Bourdon Tube** | Phosphor bronze |
| **Pointer** | Black aluminum |
| **Welding** | Silver alloy |
| **Over-pressure Limit** | 25% of full scale value |
| **Working Pressure** | Maximum 75% of full scale value |
| **Ambient/Process Temperature** | -40°F to 200°F (-40°C to 93°C) |
| **Accuracy** | ±1% ANSI/ASME Grade 1A |
| **Enclosure Rating** | IP52 |
| **Warning** | ⚠ **WARNING:** This product can expose you to chemicals including lead, which is known to the State of California to cause cancer and birth defects or other reproductive harm. For more information go to www.P65Warnings.ca.gov. |

## Order Codes (products in bold are normally stock in North America)

| Dial Size | 3.5" (90mm) | | 4" (100mm) | 4.5" (115mm) | | 6" (150mm) | |
|---|---|---|---|---|---|---|---|
| Case Material | Steel | | | Aluminum | | Steel | Aluminum |
| Connection | Bottom | Centre Back | | Bottom | Lower Back | Bottom | Lower Back |
| 30" Hg Vac/kPa | P1S234 | P1S560 | P1S460 | P1S410 | P1S430 | P1S250 | P1S475 |
| 30"/0/15 psi/kPa | P1S230 | P1S568 | P1S468 | P1S411 | P1S431 | P1S251C | P1S476 |
| 30"/0/30 psi/kPa | P1S231 | P1S569 | P1S469 | **P1S412** | P1S432 | P1S252C | P1S477 |
| 30"/0/60 psi/kPa | **P1S232** | P1S570 | P1S470 | P1S413 | P1S433 | P1S259C | P1S478 |
| 30"/0/100 psi/kPa | **P1S233** | P1S571 | P1S471 | **P1S414** | P1S434 | P1S253C | P1S479 |
| 30"/0/160 psi/kPa | P1S229 | P1S572 | P1S472 | P1S416 | P1S436 | P1S254C | P1S480 |
| 30"/0/200 psi/kPa | - | P1S573 | - | P1S417 | P1S437 | P1S255C | P1S481 |
| 30"/0/300 psi/kPa | P1S227 | P1S574 | P1S473 | P1S418 | P1S438 | P1S256C | P1S482 |
| 0/15 psi/kPa | P1S228 | P1S561 | P1S461 | P1S419 | P1S439 | - | - |
| 0/30 psi/kPa | P1S235 | P1S562 | P1S462 | **P1S420** | P1S440 | P1S251 | P1S483 |
| 0/60 psi/kPa | P1S236 | P1S563 | P1S463 | P1S421 | P1S441 | P1S252 | P1S484 |
| 0/100 psi/kPa | **P1S237** | P1S564 | P1S464 | P1S422 | P1S442 | P1S253 | P1S485 |
| 0/160 psi/kPa | **P1S238** | P1S565 | P1S465 | P1S423 | P1S443 | P1S254 | P1S486 |
| 0/200 psi/kPa | P1S239 | P1S566 | P1S466 | P1S424 | P1S444 | P1S255 | P1S487 |
| 0/300 psi/kPa | P1S240 | P1S567 | P1S467 | **P1S426** | P1S446 | P1S256 | P1S488 |
| 0/600 psi/kPa | - | - | - | P1S490 | - | - | - |
| 0/1,000 psi/kPa | - | - | - | P1S491 | - | - | - |
| 0/3,000 psi/kPa | - | - | - | P1S492 | - | - | - |
| 0/5,000 psi/kPa | - | - | - | P1S493 | - | - | - |

Other ranges and connection sizes available upon request.

Note: Syphon recommended for all steam applications

### 3.5" Bottom Connection

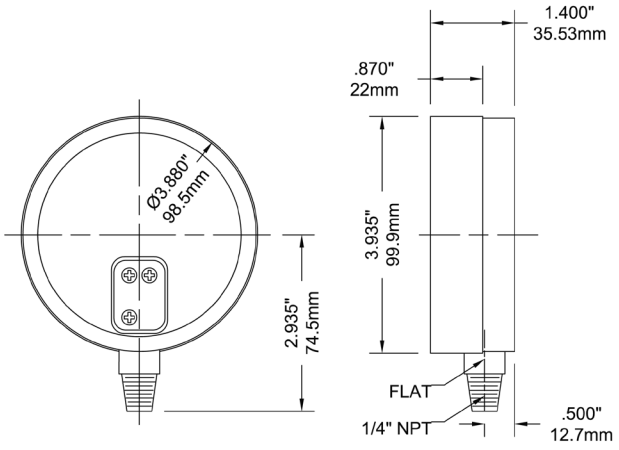


### 3.5" Back Connection

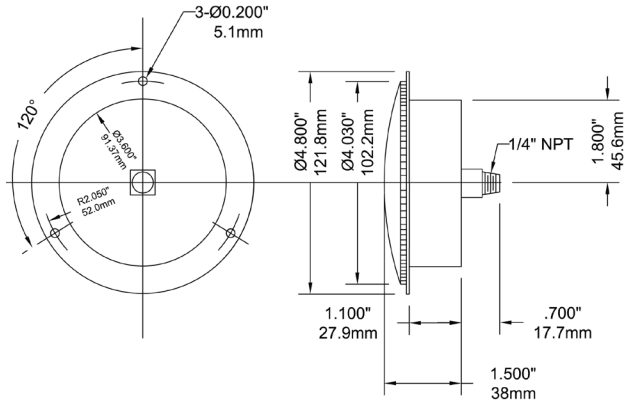


Front flange is a standard integral part of the 3.5" back connection case

## 4” Centre Back Connection

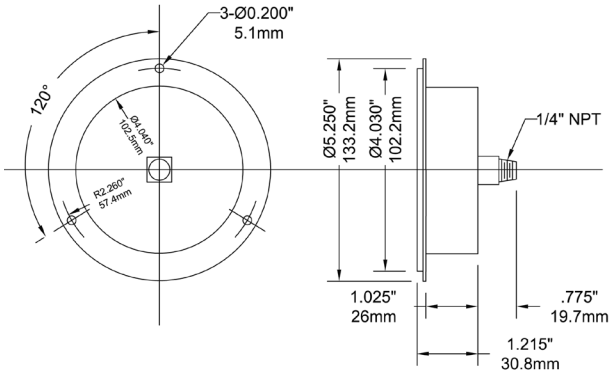


## 4.5” Bottom Connection

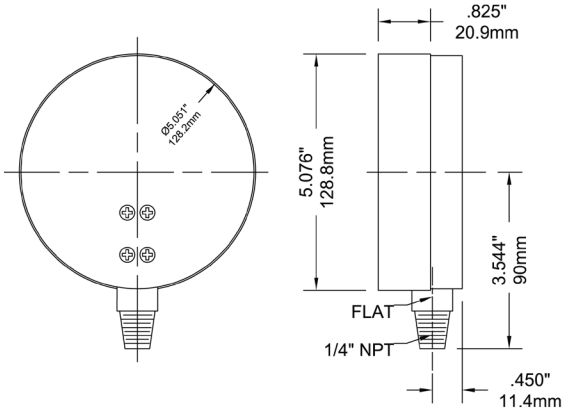


## 4.5” Lower Back Connection

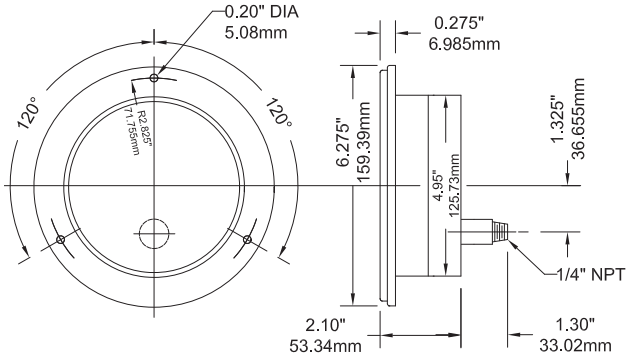


## 6” Bottom Connection

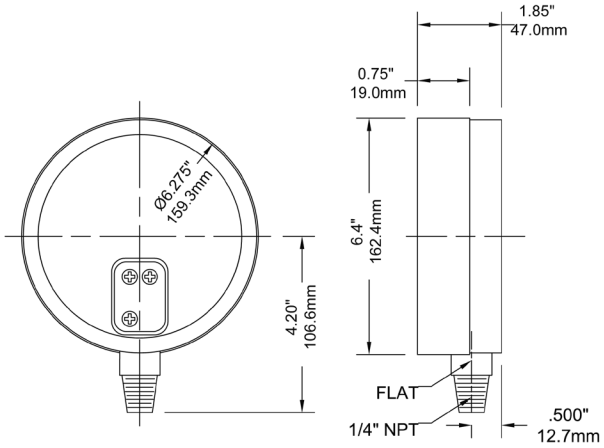


## 6” Back Connection with Front Flange

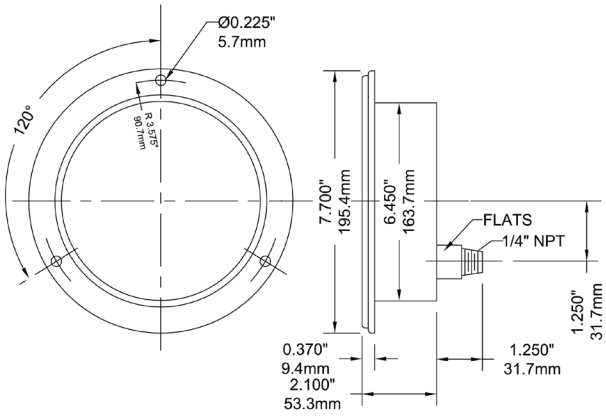

# P1S 100 Series Gauge

## Engineering Codes

| P1S ENGINEERED PART NUMBER | | P 1 S - □□ - □□□ - □□ - □□ - □□ - □ - □ - □ - □□□□ |
|---|---|---|
| **DIAL SIZE** | 3.5" (63mm) | 3 5 |
| | 4" (100mm) | 4 0 |
| | 4.5" (115mm) | 4 5 |
| | 6" (160mm) | 6 0 |
| **PRESSURE SCALE & RANGE** | SEE PRESSURE RANGES | # # # |
| **CASE MATERIAL** | ALUMINUM | A |
| | BLACK STEEL | B S |
| **WETTED PARTS** | BRASS/BRONZE | B R |
| **PROCESS CONNECTION SIZE** | 1/4" | N 4 |
| **PROCESS CONNECTION TYPE** | NPT | N |
| | BSPP (G), PARALLEL | G |
| | BSPT (R), TAPERED | R |
| **PROCESS CONNECTION LOCATION** | BOTTOM, STEM | B |
| **ACCURACY %** | 1.0 | I |
| **OPTIONS, LIST IN ALPHA-NUMERIC ORDER** | ACRYLIC LENS | A L |
| | POLYCARBONATE LENS | P L |
| | GLASS LENS | G L |
| | FRONT FLANGE | F F |
| | BACK FLANGE | B F |
| | BLACK STEEL POLISHED RING | S R |
| | BRASS POLISHED RING | B P |
| | STAINLESS STEEL POLISHED RING | S R |
| | RESTRICTED ORIFICE | R O |
| | EN-837 ON-DIAL | E N |
| | ASME B40.100 ON-DIAL | A S |
| | CUSTOM DIAL, SIMPLE | C 1 |
| | CUSTOM DIAL, COMPLEX | C 2 |
| | MAXIMUM ADJUSTABLE POINTER | M A X |
| | MINIMUM ADJUSTABLE POINTER | M I N |
| | RED SET POINTER | R S P |
| | ROSH COMPLIANT | R |
| | SPECIAL | Z # # # |

# P3S 300 Series Gauge



1




1. Back Connection with Standard (on all dial sizes) Front Flange

## Description & Features:

- Heavy duty, highly accurate aluminum case gauge
- ±0.5% accuracy
- Brass or stainless steel internals
- Large, easy-to-read dial
- StabiliZR® dampened movement available on 4.5” (115mm) dial size
- ASME B40.100 compliant
- CRN registered
- 5 year warranty

## Applications:

- Intended for non-clogging installations
- Use on air, steam, oil, fresh water
- Boilers, control rooms and chillers

| Specifications | Stainless Steel Internals | Brass Internals |
|---|---|---|
| Dial | 4.5” (115mm), 6” (150mm), 8.5” (215mm) and 10” (250mm) white aluminum with black and red markings | 4.5” (115mm), 6” (150mm), 8.5” (215mm) and 10” (250mm) white aluminum with black and red markings |
| Case | Aluminum painted black | Aluminum painted black |
| Front Flange | 4.5” (115mm), 6” (150mm): SS, polished<br>8.5” (215mm), 10” (250mm): Aluminum, painted black | 4.5” (115mm), 6” (150mm): SS, polished<br>8.5” (215mm), 10” (250mm): Aluminum, painted black |
| Back Flange | 4.5” (115mm), 6” (150mm): Steel, painted black (optional)<br>8.5” (215mm), 10” (250mm): Aluminum, painted black | 4.5” (115mm), 6” (150mm): Steel, painted black (optional)<br>8.5” (215mm), 10” (250mm): Aluminum, painted black |
| Lens | 4.5” (115mm), 6” (150mm): Glass<br>8.5” (200mm), 10” (250mm): Polycarbonate | 4.5” (115mm), 6” (150mm): Glass<br>8.5” (200mm), 10” (250mm): Polycarbonate |
| Ring | 4.5” (115mm), 6” (150mm): SS, polished<br>8.5” (215mm), 10” (250mm): Aluminum | 4.5” (115mm), 6” (150mm): SS, polished<br>8.5” (215mm), 10” (250mm): Aluminum |
| Socket | 316L SS | Brass |
| Connection | 1/4” NPT for ranges up to 600 psi (4,137 kPa),<br>1/2” NPT for ranges over 600 psi (4,137 kPa) | 1/4” NPT for ranges up to 600 psi (4,137 kPa),<br>1/2” NPT for ranges over 600 psi (4,137 kPa) |
| Bourdon Tube | 316L SS | Phosphor bronze for ranges up to 600 psi (4,137 kPa)<br>316L SS for ranges over 600 psi (4,137 kPa) |
| Movement | 304 SS | Brass |
| Pointer | Aluminum, anodized black, micrometer adjustable | Aluminum, anodized black, micrometer adjustable |
| Welding | 316L SS TIG Argonarc | Tin/copper alloy for ranges up to 600 psi (4,137 kPa)<br>Silver alloy for ranges over 600 psi (4,137 kPa) |
| Over-pressure Limit | 30% for pressures up to 600 psi (4,137 kPa),<br>25% for pressures 601 psi to 1,400 psi (4,137 kPa to 9,653 kPa),<br>15% for pressures over 1,400 psi (9,653 kPa) | 30% for pressures up to 600 psi (4,137 kPa),<br>25% for pressures 601 psi to 1,400 psi (4,137 kPa to 9,653 kPa),<br>15% for pressures over 1,400 psi (9,653 kPa) |
| Working Pressure | Maximum 75% of full scale value | Maximum 75% of full scale value |
| Ambient/Process Temperature | -40°F to 150°F (-40°C to 65°C) | -40°F to 150°F (-40°C to 65°C) |
| Accuracy | ±0.5% ANSI/ASME Grade 2A | ±0.5% ANSI/ASME Grade 2A |
| Enclosure Rating | IP52 | IP52 |
| Warning (brass internals only) | N/A | ⚠ **WARNING:** This product can expose you to chemicals including lead, which is known to the State of California to cause cancer and birth defects or other reproductive harm. For more information go to www.P65Warnings.ca.gov. |

## Order Codes

| | Dial Size | 4.5" (115mm) | | | | 6" (150mm) | | | |
|---|---|---|---|---|---|---|---|---|---|
| | Connection | Bottom | Back (LB) | Bottom | Back (LB) | Bottom | Back (LB) | Bottom | Back (LB) |
| | Movement, Socket, Tube | Brass | | SS | | Brass | | SS | |
| 1/4" | 30" Hg Vac/kPa | P3S6000 | P3S6000B | P3S6025 | P3S6025B | P3S6075 | P3S6075B | P3S6260 | P3S6260B |
| | 30"/0/15 psi/kPa | P3S6001 | P3S6001B | P3S6026 | P3S6026B | P3S6076 | P3S6076B | P3S6261 | P3S6261B |
| | 30"/0/30 psi/kPa | P3S6002 | P3S6002B | P3S6027 | P3S6027B | P3S6077 | P3S6077B | P3S6162 | P3S6162B |
| | 30"/0/60 psi/kPa | P3S6003 | P3S6003B | P3S6028 | P3S6028B | P3S6078 | P3S6078B | P3S6163 | P3S6163B |
| | 30"/0/100 psi/kPa | P3S6004 | P3S6004B | P3S6029 | P3S6029B | P3S6079 | P3S6079B | P3S6164 | P3S6164B |
| | 30"/0/160 psi/kPa | P3S6005 | P3S6005B | P3S6030 | P3S6030B | P3S6080 | P3S6080B | P3S6265 | P3S6265B |
| | 30"/0/200 psi/kPa | P3S6006 | P3S6006B | P3S6031 | P3S6031B | P3S6081 | P3S6081B | P3S6266 | P3S6266B |
| | 30"/0/300 psi/kPa | P3S6007 | P3S6007B | P3S6032 | P3S6032B | P3S6082 | P3S6082B | P3S6267 | P3S6267B |
| | 0/15 psi/kPa | P3S6008 | P3S6008B | P3S6033 | P3S6033B | P3S6083 | P3S6083B | P3S6098 | P3S6098B |
| | 0/30 psi/kPa | P3S6009 | P3S6009B | P3S6034 | P3S6034B | P3S6084 | P3S6084B | P3S6099 | P3S6099B |
| | 0/60 psi/kPa | P3S6010 | P3S6010B | P3S6035 | P3S6035B | P3S6085 | P3S6085B | P3S6100 | P3S6100B |
| | 0/100 psi/kPa | P3S6011 | P3S6011B | P3S6036 | P3S6036B | P3S6086 | P3S6086B | P3S6101 | P3S6101B |
| | 0/160 psi/kPa | P3S6012 | P3S6012B | P3S6037 | P3S6037B | P3S6087 | P3S6087B | P3S6102 | P3S6102B |
| | 0/200 psi/kPa | P3S6013 | P3S6013B | P3S6038 | P3S6038B | P3S6088 | P3S6088B | P3S6103 | P3S6103B |
| | 0/300 psi/kPa | P3S6014 | P3S6014B | P3S6039 | P3S6039B | P3S6089 | P3S6089B | P3S6104 | P3S6104B |
| | 0/400 psi/kPa | P3S6015 | P3S6015B | P3S6040 | P3S6040B | P3S6090 | P3S6090B | P3S6105 | P3S6105B |
| | 0/600 psi/kPa | P3S6016 | P3S6016B | P3S6041 | P3S6041B | P3S6091 | P3S6091B | P3S6106 | P3S6106B |
| 1/2" | 0/1,000 psi/kPa | P3S6017 | P3S6017B | P3S6042 | P3S6042B | P3S6092 | P3S6092B | P3S6107 | P3S6107B |
| | 0/1,500 psi/kPa | P3S6018 | P3S6018B | P3S6043 | P3S6043B | P3S6093 | P3S6093B | P3S6108 | P3S6108B |
| | 0/2,000 psi/kPa | P3S6019 | P3S6019B | P3S6044 | P3S6044B | P3S6094 | P3S6094B | P3S6109 | P3S6109B |
| | 0/3,000 psi/kPa | P3S6020 | P3S6020B | P3S6045 | P3S6045B | P3S6095 | P3S6095B | P3S6110 | P3S6110B |
| | 0/5,000 psi/kPa | P3S6021 | P3S6021B | P3S6046 | P3S6046B | P3S6096 | P3S6096B | P3S6111 | P3S6111B |
| | 0/10,000 psi/kPa | P3S6022 | P3S6022B | P3S6047 | P3S6047B | P3S6170 | P3S6170B | P3S6180 | P3S6180B |
| | 0/15,000 psi/kPa | P3S6023 | P3S6023B | P3S6160 | P3S6160B | P3S6171 | P3S6171B | P3S6181 | P3S6181B |
| | 0/20,000 psi/kPa | P3S6024 | P3S6024B | P3S6161 | P3S6161B | P3S6172 | P3S6172B | P3S6182 | P3S6182B |
| | **Dial Size** | **8.5" (215mm)** | | | | **10" (250mm)** | | | |
| 1/4" | 30" Hg Vac/kPa | P3S6200 | P3S6200B | P3S6300 | P3S6300B | P3S6400 | P3S6400B | P3S6500 | P3S6500B |
| | 30"/0/15 psi/kPa | P3S6201 | P3S6201B | P3S6301 | P3S6301B | P3S6401 | P3S6401B | P3S6501 | P3S6501B |
| | 30"/0/30 psi/kPa | P3S6202 | P3S6202B | P3S6302 | P3S6302B | P3S6402 | P3S6402B | P3S6502 | P3S6502B |
| | 30"/0/60 psi/kPa | P3S6203 | P3S6203B | P3S6303 | P3S6303B | P3S6403 | P3S6403B | P3S6503 | P3S6503B |
| | 30"/0/100 psi/kPa | P3S6204 | P3S6204B | P3S6304 | P3S6304B | P3S6404 | P3S6404B | P3S6504 | P3S6504B |
| | 30"/0/160 psi/kPa | P3S6205 | P3S6205B | P3S6305 | P3S6305B | P3S6405 | P3S6405B | P3S6505 | P3S6505B |
| | 30"/0/200 psi/kPa | P3S6206 | P3S6206B | P3S6306 | P3S6306B | P3S6406 | P3S6406B | P3S6506 | P3S6506B |
| | 30"/0/300 psi/kPa | P3S6207 | P3S6207B | P3S6307 | P3S6307B | P3S6407 | P3S6407B | P3S6507 | P3S6507B |
| | 0/15 psi/kPa | P3S6208 | P3S6208B | P3S6308 | P3S6308B | P3S6408 | P3S6408B | P3S6508 | P3S6508B |
| | 0/30 psi/kPa | P3S6209 | P3S6209B | P3S6309 | P3S6309B | P3S6409 | P3S6409B | P3S6509 | P3S6509B |
| | 0/60 psi/kPa | P3S6210 | P3S6210B | P3S6310 | P3S6310B | P3S6410 | P3S6410B | P3S6510 | P3S6510B |
| | 0/100 psi/kPa | P3S6211 | P3S6211B | P3S6311 | P3S6311B | P3S6411 | P3S6411B | P3S6511 | P3S6511B |
| | 0/160 psi/kPa | P3S6212 | P3S6212B | P3S6312 | P3S6312B | P3S6412 | P3S6412B | P3S6512 | P3S6512B |
| | 0/200 psi/kPa | P3S6213 | P3S6213B | P3S6313 | P3S6313B | P3S6413 | P3S6413B | P3S6513 | P3S6513B |
| | 0/300 psi/kPa | P3S6214 | P3S6214B | P3S6314 | P3S6314B | P3S6414 | P3S6414B | P3S6514 | P3S6514B |
| | 0/400 psi/kPa | P3S6215 | P3S6215B | P3S6315 | P3S6315B | P3S6415 | P3S6415B | P3S6515 | P3S6515B |
| | 0/600 psi/kPa | P3S6216 | P3S6216B | P3S6316 | P3S6316B | P3S6416 | P3S6416B | P3S6516 | P3S6516B |
| 1/2" | 0/1,000 psi/kPa | P3S6217 | P3S6217B | P3S6317 | P3S6317B | P3S6417 | P3S6417B | P3S6517 | P3S6517B |
| | 0/1,500 psi/kPa | P3S6218 | P3S6218B | P3S6318 | P3S6318B | P3S6418 | P3S6418B | P3S6518 | P3S6518B |
| | 0/2,000 psi/kPa | P3S6219 | P3S6219B | P3S6319 | P3S6319B | P3S6419 | P3S6419B | P3S6519 | P3S6519B |
| | 0/3,000 psi/kPa | P3S6220 | P3S6220B | P3S6320 | P3S6320B | P3S6420 | P3S6420B | P3S6520 | P3S6520B |
| | 0/5,000 psi/kPa | P3S6221 | P3S6221B | P3S6321 | P3S6321B | P3S6421 | P3S6421B | P3S6521 | P3S6521B |
| | 0/10,000 psi/kPa | P3S6222 | P3S6222B | P3S6322 | P3S6322B | P3S6422 | P3S6422B | P3S6522 | P3S6522B |
| | 0/15,000 psi/kPa | P3S6223 | P3S6223B | P3S6323 | P3S6322B | P3S6423 | P3S6423B | P3S6523 | P3S6523B |
| | 0/20,000 psi/kPa | P3S6224 | P3S6224B | P3S6324 | P3S6324B | P3S6424 | P3S6424B | P3S6524 | P3S6524B |

Other ranges and connection sizes available upon request.

## 4.5” Bottom Connection with Back Flange

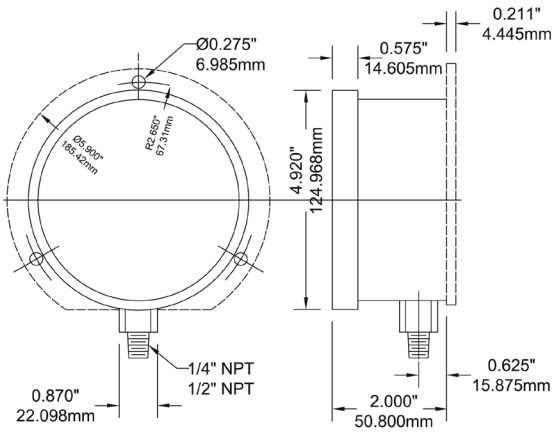


## 4.5” Back Connection with Front Flange

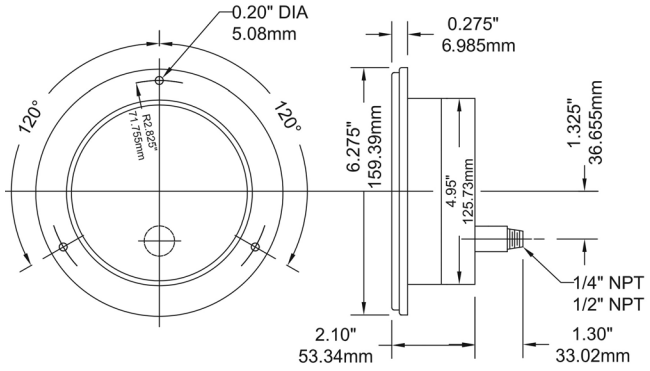


## 6” Bottom Connection with Back Flange

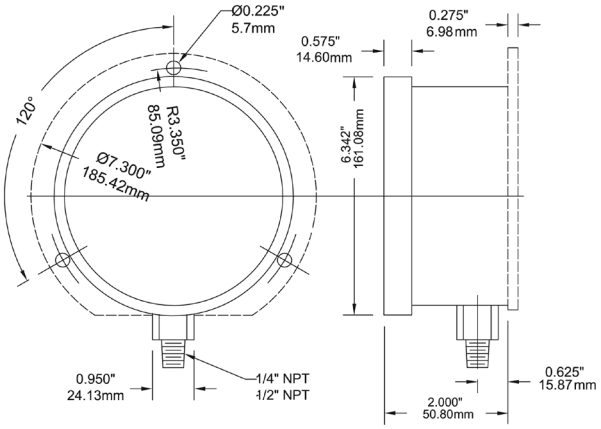


## 6” Back Connection with Front Flange

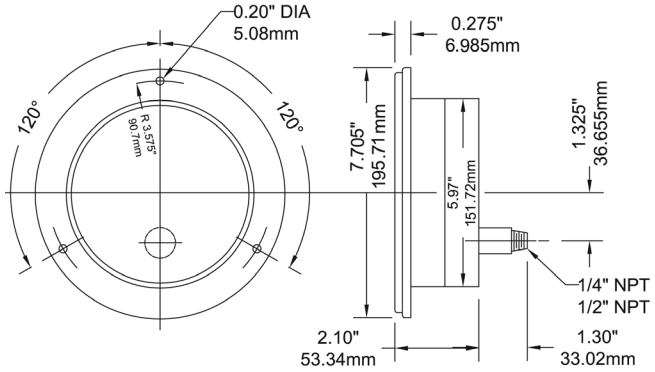


## 8.5” Bottom Connection with Back Flange

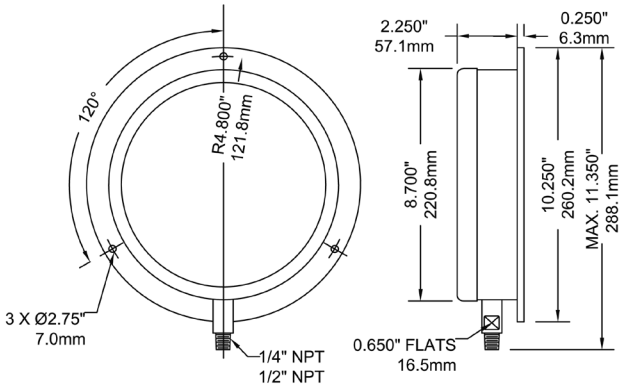


## 10” Back Connection with Front Flange

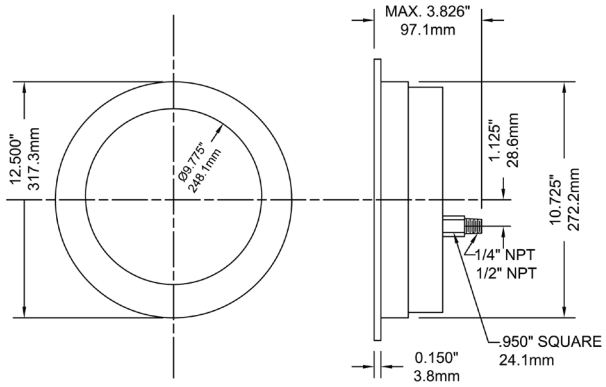

## Engineering Codes

| P3S ENGINEERED PART NUMBER | | P 3 S - □□ - □□□ - □ - □□ - □□ - □ - □□ - □ - □□□□ |
|---|---|---|
| **DIAL SIZE** | 4.5" (115mm) | 4 5 |
| | 6" (160mm) | 6 0 |
| | 8.5" (215mm) | 8 5 |
| | 10" (260mm) | 1 0 |
| **PRESSURE SCALE & RANGE** | SEE PRESSURE RANGES | # # # |
| **CASE MATERIAL** | ALUMINUM | A |
| **WETTED PARTS** | BRASS/BRONZE | B R |
| | 316L | S L |
| **PROCESS CONNECTION SIZE** | 1/4" | N 4 |
| | 1/2" | N 2 |
| **PROCESS CONNECTION TYPE** | NPT | N |
| | BSPP (G), PARALLEL | G |
| | BSPT (R), TAPERED | R |
| **PROCESS CONNECTION LOCATION** | BOTTOM, STEM | B |
| | LOWER BACK | L B |
| **ACCURACY %** | 0.5 | K |
| **OPTIONS, LIST IN ALPHA-NUMERIC ORDER** | POLYCARBONATE LENS | P L |
| | GLASS LENS | G L |
| | SAFETY GLASS, LAMINATED | S G |
| | FRONT FLANGE | F F |
| | BACK FLANGE | B F |
| | BLOW-OUT DISK | B D |
| | FLUSH MOUNTING RING | F M R |
| | HINGED CASE | H C |
| | ALUMINUM POLISHED RING | A R |
| | STAINLESS STEEL POLISHED RING | S R |
| | RESTRICTED ORIFICE | R O |
| | OVER & UNDER PRESSURE STOP | O U S |
| | CUSTOM DIAL, SIMPLE | C 1 |
| | CUSTOM DIAL, COMPLEX | C 2 |
| | MAXIMUM ADJUSTABLE POINTER | M A X |
| | MINIMUM ADJUSTABLE POINTER | M I N |
| | RED SET POINTER | R S P |
| | STABILIZR® | Z R |
| | SPECIAL | Z # # # |

# PBC Forged Brass Case Gauge

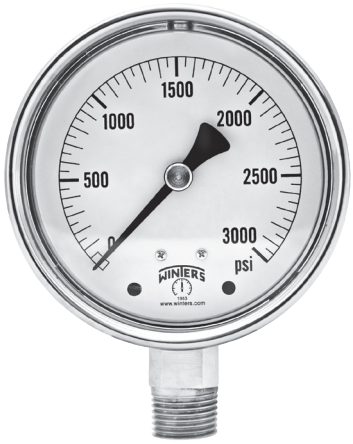


## Description & Features:

- One piece forged brass case designed for severe service conditions
- Easy-to-read single or dual scale dial
- ASME B40.100 compliant
- CRN registered
- 5 year warranty

## Applications:

- High vibration industrial installations including hydraulic and fracking systems

| Specifications | |
|---|---|
| **Dial** | 2.5” (63mm), 4” (100mm) |
| **Case** | Forged brass, rugged<br>2.5”: Liquid filled case standard, 4”: dry case standard |
| **Lens** | Polycarbonate |
| **Ring** | 2.5” (63mm): Gold-coloured ABS, 4” (100mm): polished brass |
| **Socket** | Brass |
| **Pointer** | Aluminum, anodized black |
| **Connection** | 2.5”(63mm): 1/4” NPT bottom or back, 4” (100mm): 1/4” or 1/2” NPT bottom |
| **Wetted Parts** | Brass |
| **Ambient/Process Temperature** | -40°F to 150°F (-40°C to 65°C) |
| **Accuracy** | 2.5” (63mm): ±1.5% of full scale,<br>4” (100mm): ±1% ANSI/ASME Grade 1A |
| **Enclosure Rating** | IP65 |
| **Warning** | ⚠ **WARNING:** This product can expose you to chemicals including lead, which is known to the State of California to cause cancer and birth defects or other reproductive harm. For more information go to www.P65Warnings.ca.gov. |

## Single Scale Order Codes

| Dial Size | 2.5" (63mm) | | 4" (100mm) | |
|---|---|---|---|---|
| Connection | 1/4" Bottom | 1/4" Back (CB) | 1/4" Bottom | 1/2" Bottom |
| 30" Hg Vac | PBC801R6 | PBC900R6 | PBC700R6 | PBC1234R6 |
| 30"/0/15 psi | PBC790R1 | PBC890R1 | PBC701R1 | PBC1235R1 |
| 30"/0/30 psi | PBC798R1 | PBC898R1 | PBC702R1 | PBC1236R1 |
| 30"/0/60 psi | PBC799R1 | PBC899R1 | PBC703R1 | PBC1237R1 |
| 30"/0/100 psi | PBC791R1 | PBC891R1 | PBC704R1 | PBC1238R1 |
| 30"/0/150 psi | PBC792R1 | PBC892R1 | PBC705R1 | PBC1239R1 |
| 30"/0/200 psi | PBC794R1 | PBC894R1 | PBC706R1 | PBC1240R1 |
| 30"/0/300 psi | PBC795R1 | PBC895R1 | PBC707R1 | PBC1241R1 |
| 0/15 psi | PBC800R1 | PBC901R1 | PBC708R1 | PBC1242R1 |
| 0/30 psi | PBC802R1 | PBC902R1 | PBC709R1 | PBC1243R1 |
| 0/60 psi | PBC803R1 | PBC903R1 | PBC710R1 | PBC1244R1 |
| 0/100 psi | PBC804R1 | PBC904R1 | PBC711R1 | PBC1245R1 |
| 0/160 psi | PBC805R1 | PBC905R1 | PBC712R1 | PBC1246R1 |
| 0/200 psi | PBC806R1 | PBC906R1 | PBC713R1 | PBC1247R1 |
| 0/300 psi | PBC807R1 | PBC907R1 | PBC714R1 | PBC1248R1 |
| 0/400 psi | PBC817R1 | PBC917R1 | PBC715R1 | PBC1249R1 |
| 0/600 psi | PBC808R1 | PBC908R1 | PBC716R1 | PBC1250R1 |
| 0/1,000 psi | PBC809R1 | PBC909R1 | PBC724R1 | PBC717R1 |
| 0/1,500 psi | PBC816R1 | PBC914R1 | PBC725R1 | PBC718R1 |
| 0/2,000 psi | PBC810R1 | PBC910R1 | PBC726R1 | PBC719R1 |
| 0/3,000 psi | PBC811R1 | PBC911R1 | PBC727R1 | PBC720R1 |
| 0/5,000 psi | PBC812R1 | PBC912R1 | PBC728R1 | PBC721R1 |
| 0/6,000 psi | PBC814R1 | PBC915R1 | PBC024R1 | PBC784R1 |
| 0/10,000 psi | PBC813R1 | PBC913R1 | PBC729R1 | PBC722R1 |

## Dual Scale Order Codes

| Dial Size | 2.5" (63mm) | | 4" (100mm) | |
|---|---|---|---|---|
| Connection | 1/4" Bottom | 1/4" Back (CB) | 1/4" Bottom | 1/2" Bottom |
| 30" Hg Vac/kPa | PBC801 | PBC900 | PBC700 | PBC1234 |
| 30"/0/15 psi/kPa | PBC790 | PBC890 | PBC701 | PBC1235 |
| 30"/0/30 psi/kPa | PBC798 | PBC898 | PBC702 | PBC1236 |
| 30"/0/60 psi/kPa | PBC799 | PBC899 | PBC703 | PBC1237 |
| 30"/0/100 psi/kPa | PBC791 | PBC891 | PBC704 | PBC1238 |
| 30"/0/150 psi/kPa | PBC792 | PBC892 | PBC705 | PBC1239 |
| 30"/0/200 psi/kPa | PBC794 | PBC894 | PBC706 | PBC1240 |
| 30"/0/300 psi/kPa | PBC795 | PBC895 | PBC707 | PBC1241 |
| 0/15 psi/kPa | PBC800 | PBC901 | PBC708 | PBC1242 |
| 0/30 psi/kPa | PBC802 | PBC902 | PBC709 | PBC1243 |
| 0/60 psi/kPa | PBC803 | PBC903 | PBC710 | PBC1244 |
| 0/100 psi/kPa | PBC804 | PBC904 | PBC711 | PBC1245 |
| 0/160 psi/kPa | PBC805 | PBC905 | PBC712 | PBC1246 |
| 0/200 psi/kPa | PBC806 | PBC906 | PBC713 | PBC1247 |
| 0/300 psi/kPa | PBC807 | PBC907 | PBC714 | PBC1248 |
| 0/400 psi/kPa | PBC817 | PBC917 | PBC715 | PBC1249 |
| 0/600 psi/kPa | PBC808 | PBC908 | PBC716 | PBC1250 |
| 0/1,000 psi/kPa | PBC809 | PBC909 | PBC724 | PBC717 |
| 0/1,500 psi/kPa | PBC816 | PBC914 | PBC725 | PBC718 |
| 0/2,000 psi/kPa | PBC810 | PBC910 | PBC726 | PBC719 |
| 0/3,000 psi/kPa | PBC811 | PBC911 | PBC727 | PBC720 |
| 0/5,000 psi/kPa | PBC812 | PBC912 | PBC728 | PBC721 |
| 0/6,000 psi/kPa | PBC814 | PBC915 | PBC024 | PBC784 |
| 0/10,000 psi/kPa | PBC813 | PBC913 | PBC729 | PBC722 |

Other ranges and connection sizes available upon request. For scale change, refer to How to Order Guide for scale codes. **For options, attach suffix to end of order code: i.e. PBC805-REST for RESTRICTOR SCREW.**

**Option suffix:**
25DRY = Supply 2.5" (63mm) gauge dry
G = Glycerin filled case
REST = Restrictor screw

## 2.5” Bottom Connection

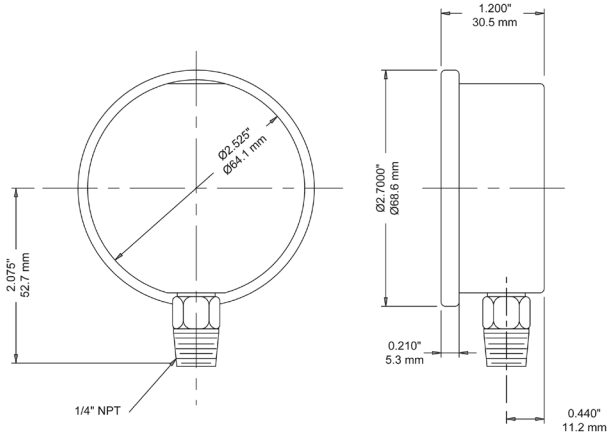


## 2.5” Back Connection

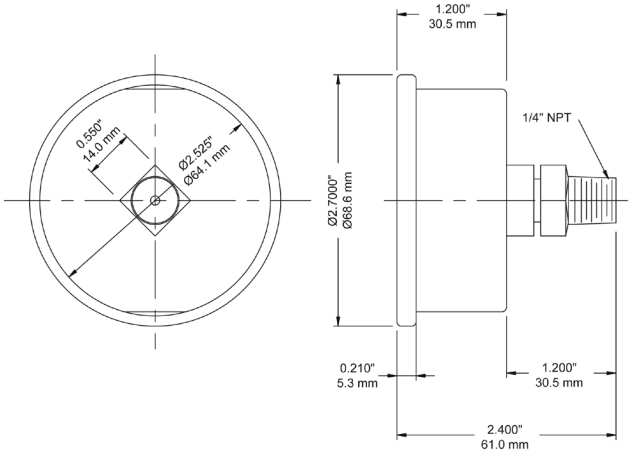


## 4” Bottom Connection

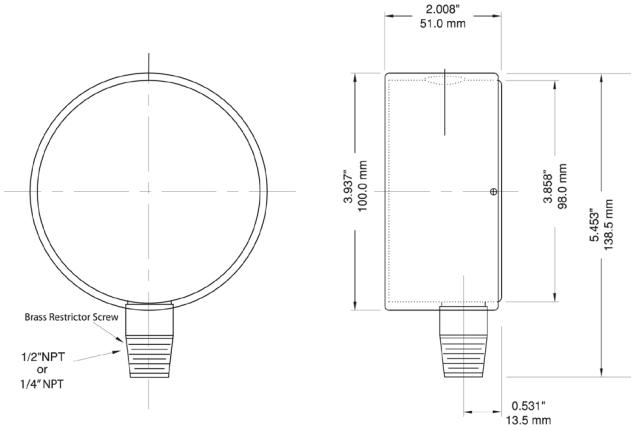

# PCC Colour Coded Gauge



## Description & Features:

- Unique pressure instrument utilizing colour coded cases for easy identification of processes
- 4 different colours
- Stainless steel or brass internals, liquid fillable
- ASME B40.100 compliant
- CRN registered
- 5 year warranty

## Applications:

- Used for easy identification of process or pressure
- Well suited for use where vibration or pulsation exist (with liquid filling)
- Used on machinery, process lines, compressors, hydraulics

| Specifications | Stainless Steel Internals | Brass Internals |
|---|---|---|
| Dial | 4” (100mm) white aluminum with black and red markings | 4” (100mm) white aluminum with black and red markings |
| Case | PBT Polybutylene terephthalate - colour coded | PBT Polybutylene terephthalate - colour coded |
| Lens | Polycarbonate | Polycarbonate |
| Ring | PBT Polybutylene terephthalate - colour coded | PBT Polybutylene terephthalate - colour coded |
| Socket | 316L SS | OT 58 brass |
| Connection | 1/4” NPT or 1/2” NPT standard | 1/4” NPT or 1/2” NPT standard |
| Bourdon Tube | 316L SS, drawn seamless | Phosphor bronze |
| Movement | 304 SS | Gears are OT 59 brass, plates are AISI 304 SS |
| Pointer | Aluminum, anodized black, micrometer adjustable | Aluminum, anodized black |
| Welding | TIG, silver alloy | Tin/copper alloy for pressures up to 600 psi (4,137 kPa), Silver alloy for pressures over 600 psi (4,137 kPa) |
| Over-pressure Limit | 30% for pressures up to 600 psi (4,137 kPa), 15% for pressures over 600 psi (4,137 kPa) | 25% for pressures up to 1,400 psi (9,653 kPa), 15% for pressures over 1,400 psi (9,653 kPa) |
| Gasket Material | EPDM | Silicone rubber for socket, EPDM for lens, filling plug and blow-out vent |
| Working Pressure | Maximum 75% of full scale value | Maximum 75% of full scale value |
| Ambient/Process Temperature | Dry: -40°F to 200°F (-40°C to 93°C) Glycerin Filled: -40°F to 150°F (-40°C to 65°C) | Dry: -40°F to 200°F (-40°C to 93°C) Glycerin Filled: -40°F to 150°F (-40°C to 65°C) |
| Accuracy | ±1% ANSI/ASME Grade 1A | ±1% ANSI/ASME Grade 1A |
| Enclosure Rating | IP65 per EN60529-1 (IEC529-1) | IP65 per EN60529-1 (IEC529-1) |
| Warning (brass internals only) | N/A | **WARNING:** This product can expose you to chemicals including lead, which is known to the State of California to cause cancer and birth defects or other reproductive harm. For more information go to www.P65Warnings.ca.gov. |

## Order Codes (products in bold are normally stock in North America)

| Dial Size | 4" (100mm) | | | |
|---|---|---|---|---|
| Connection | 1/4" Bottom | 1/2" Bottom | 1/4" Bottom | 1/2" Bottom |
| Movement, Socket, Tube | Brass | | SS | |
| 30" Hg Vac/kPa | PCC600C | - | PCC640C | PCC655C |
| 30"/0/15 psi/kPa | PCC1020C | - | PCC1036C | PCC1044C |
| 30"/0/30 psi/kPa | PCC1021C | - | PCC1037C | PCC1045C |
| 30"/0/60 psi/kPa | PCC1022C | - | PCC1038C | PCC1046C |
| 30"/0/100 psi/kPa | PCC1023C | - | PCC1039C | PCC1047C |
| 30"/0/160 psi/kPa | PCC1024C | - | PCC1040C | PCC1048C |
| 30"/0/200 psi/kPa | PCC1026C | - | PCC1042C | PCC1050C |
| 30"/0/300 psi/kPa | PCC1027C | - | PCC1043C | PCC1051C |
| 0/15 psi/kPa | **PCC601C** | - | PCC641C | PCC656C |
| 0/30 psi/kPa | **PCC602C** | - | PCC642C | PCC657C |
| 0/60 psi/kPa | **PCC603C** | - | PCC643C | PCC658C |
| 0/100 psi/kPa | **PCC604C** | - | PCC644C | PCC659C |
| 0/160 psi/kPa | **PCC605C** | - | PCC645C | PCC660C |
| 0/200 psi/kPa | **PCC606C** | - | PCC646C | PCC661C |
| 0/300 psi/kPa | **PCC607C** | - | PCC647C | PCC662C |
| 0/400 psi/kPa | PCC610C | - | PCC650C | PCC666C |
| 0/600 psi/kPa | PCC608C | - | PCC648C | PCC663C |
| 0/1,000 psi/kPa | PCC609C | PCC624C | PCC649C | PCC664C |
| 0/1,500 psi/kPa | - | PCC625C | - | PCC665C |
| 0/2,000 psi/kPa | - | PCC626C | - | PCC667C |
| 0/3,000 psi/kPa | - | PCC627C | - | PCC668C |
| 0/5,000 psi/kPa | - | PCC628C | - | PCC669C |
| 0/10,000 psi/kPa | - | PCC629C | - | PCC670C |
| 0/15,000 psi/kPa | - | PCC630C | - | PCC671C |
| 0/20,000 psi/kPa | - | PCC639C | - | PCC672C |

Other ranges and connection sizes available upon request. For scale change, refer to How to Order Guide for scale codes. **For options, attach suffix to end of order code: i.e. PCC603C-G for GLYCERIN FILL.**

| Colour Coded Cases | Colour | Suffix |
|---|---|---|
| | Red | **1Y** |
| | Yellow | **2Y** |
| | Black | **3Y** |
| | Blue | **4Y** |

Add appropriate colour code as suffix.
(e.g. PCC662C1Y = Gauge Order Code + Case Colour Code)

**Option suffix:**
G = Glycerin filled case
SG4 = 4" (100mm) Safety glass lens

### 4" Bottom Connection

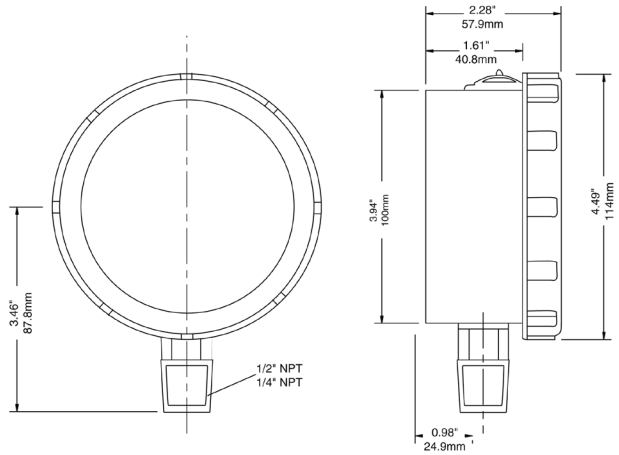

# PCT, PCT-LF

# Contractor Gauge
# Lead Free Contractor

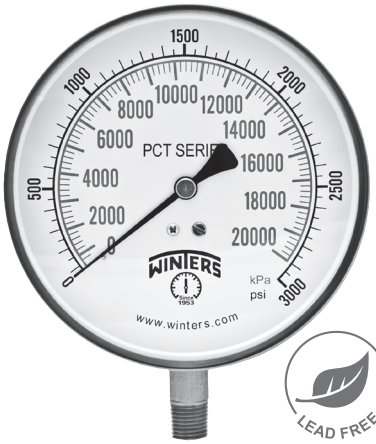


## Description & Features:

- Economical 4.5” (115mm) stainless steel case gauge
- Brass or lead free brass wetted parts
- ±1% accuracy
- Zero adjustment screw
- 1/4” NPT
- Restricted orifice
- ASME B40.100 compliant
- CRN registered
- Lead free version NSF-61-372 certified
- 5 year warranty

## Applications:

- Most commercial air, water and steam services (with syphon)
- Lead free version for potable water systems

| Specifications | |
|---|---|
| **Dial** | 4.5” (115mm) white aluminum with black and red markings |
| **Case** | 304 SS |
| **Lens** | Acrylic |
| **Ring** | 304 SS |
| **Socket** | PCT: Brass<br>PCT-LF: Lead free brass, NSF-61-372 certified |
| **Connection** | 1/4” NPT standard |
| **Bourdon Tube** | Phosphor bronze |
| **Movement** | PCT: Brass,<br>PCT-LF: Lead free brass, NSF-61-372 certified |
| **Pointer** | Aluminum, anodized black, recalibrator screw |
| **Welding** | Silver solder |
| **Over-pressure Limit** | 25% for pressures up to 1,450 psi (9,998 kPa), 15% for pressures over 1,450 psi (9,998 kPa) |
| **Working Pressure** | Maximum 75% of full scale value |
| **Ambient/Process Temperature** | -40°F to 200°F (-40°C to 93°C) |
| **Accuracy** | ±1% ANSI/ASME Grade 1A |
| **Enclosure Rating** | IP52 |
| **Warning** | **WARNING:** This product can expose you to chemicals including lead, which is known to the State of California to cause cancer and birth defects or other reproductive harm. For more information go to www.P65Warnings.ca.gov. |

## PCT Order Codes (products in bold are normally stock in North America)

| Connection | 1/4” Bottom |
|---|---|
| 30” Hg Vac/kPa | PCT320 |
| 30”/0/30 psi/kPa | **PCT329** |
| 30”/0/60 psi/kPa | PCT330 |
| 30”/0/100 psi/kPa | **PCT328** |
| 30”/0/160 psi/kPa | PCT332 |
| 30”/0/200 psi/kPa | PCT333 |
| 30”/0/300 psi/kPa | **PCT334** |
| 0/15 psi/kPa | **PCT319** |
| 0/30 psi/kPa | **PCT321** |
| 0/60 psi/kPa | **PCT322** |
| 0/100 psi/kPa | **PCT323** |
| 0/160 psi/kPa | **PCT324** |
| 0/200 psi/kPa | **PCT325** |
| 0/300 psi/kPa | **PCT326** |
| 0/400 psi/kPa | **PCT327** |
| 0/600 psi/kPa | **PCT331** |
| 0/1,000 psi/kPa | PCT293 |
| 0/3,000 psi/kPa | PCT294 |
| 0/5,000 psi/kPa | PCT295 |

## PCT-LF Order Codes (products in bold are normally stock in North America)

| Connection | 1/4” Bottom |
|---|---|
| 30” Hg Vac/kPa | PCT320LF |
| 30”/0/30 psi/kPa | PCT329LF |
| 30”/0/60 psi/kPa | PCT330LF |
| 30”/0/100 psi/kPa | PCT328LF |
| 30”/0/160 psi/kPa | PCT332LF |
| 30”/0/200 psi/kPa | PCT333LF |
| 30”/0/300 psi/kPa | PCT334LF |
| 0/15 psi/kPa | **PCT319LF** |
| 0/30 psi/kPa | **PCT321LF** |
| 0/60 psi/kPa | **PCT322LF** |
| 0/100 psi/kPa | **PCT323LF** |
| 0/160 psi/kPa | **PCT324LF** |
| 0/200 psi/kPa | **PCT325LF** |
| 0/300 psi/kPa | **PCT326LF** |
| 0/400 psi/kPa | **PCT327LF** |
| 0/600 psi/kPa | **PCT331LF** |
| 0/1,000 psi/kPa | PCT293LF |
| 0/3,000 psi/kPa | PCT294LF |
| 0/5,000 psi/kPa | PCT295LF |

Other ranges and connection sizes available upon request. For scale change, refer to How to Order Guide for scale codes. **For options, attach suffix to end of order code: i.e. PCT322-45BF for BACK FLANGE.**

**Option suffix:**
45BF = 4.5” (115mm) Back flange

## 4.5” Bottom Connection

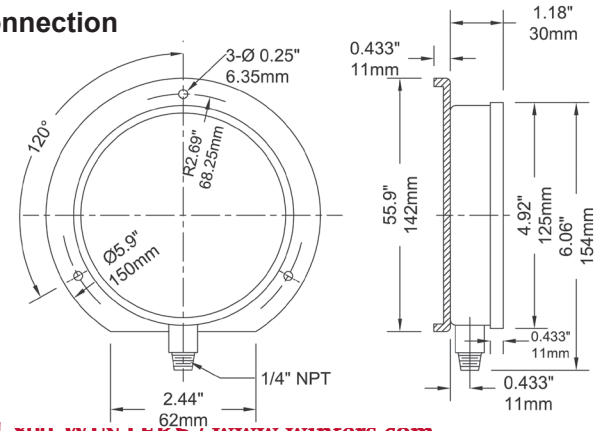

# PCT, PCT-LF
# Contractor Gauge
# Lead Free Contractor Gauge

## Engineering Codes

| PCT ENGINEERED PART NUMBER | |
|---|---|
| **DIAL SIZE** | 4.5" (115mm) |
| **PRESSURE SCALE & RANGE** | SEE PRESSURE RANGES |
| **CASE MATERIAL** | 304SS |
| | 316SS |
| **WETTED PARTS** | BRASS/BRONZE |
| **PROCESS CONNECTION SIZE** | 1/4" |
| **PROCESS CONNECTION TYPE** | NPT |
| | BSPP (G), PARALLEL |
| | BSPT (R), TAPERED |
| **PROCESS CONNECTION LOCATION** | BOTTOM, STEM |
| **ACCURACY %** | 1.0 |
| **OPTIONS, LIST IN ALPHA-NUMERIC ORDER** | BACK FLANGE |
| | 316SS RING |
| | NO RESTRICTOR SCREW / ORIFICE |
| | CUSTOM DIAL, SIMPLE |
| | CUSTOM DIAL, COMPLEX |
| | LEAD FREE, NSF 61/372 COMPLIANT |
| | SPECIAL |

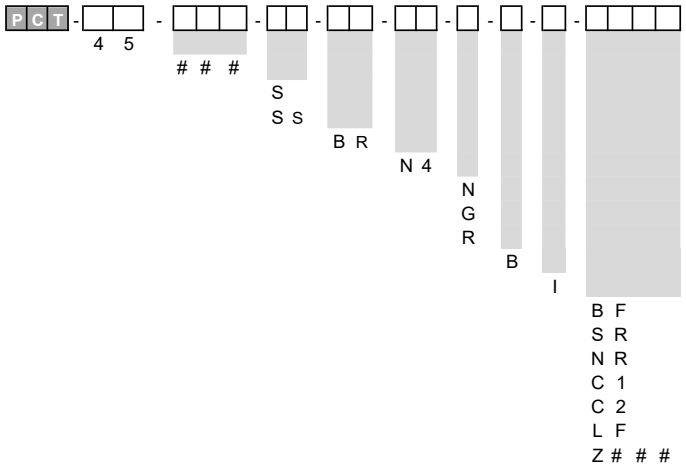

# PFP

# Premium Stainless Steel Liquid Filled Gauge

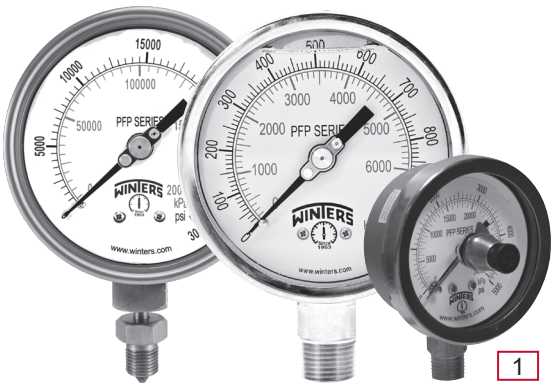


1. Maximum Indicating Pointer

RoHS compliant

Note: RoHS applies to SS internals only

## Description & Features:

- Liquid filled stainless steel case protects against vibration and pulsation
- Bayonet ring
- Highly accurate
- Back, bottom, or panel mounted
- Under and overload stops
- Ventable plug on 2.5” to 4.5” stainless steel and 4.5” brass bottom mount and 4” stainless steel back mount
- Stainless steel or brass wetted parts
- Restrictor screw standard on dual scale (optional on single scale)
- Dry case available
- ASME B40.100 compliant (EN837-1 available)
- CRN registered
- 5 year warranty

## Applications:

- Outdoor and severe ambient and process conditions
- Use where harmful vibration and pulsation are present
- Hydraulic equipment, oil field equipment, pumps, compressors and process industries

| Specifications | Stainless Steel Internals | Brass Internals |
|---|---|---|
| Dial | 2.5” (63mm), 4” (100mm), 4.5” (115mm), 6” (150mm) white aluminum with black and red markings | 4” (100mm), 4.5” (115mm) white aluminum with black and red markings |
| Case | AISI 304 SS | AISI 304 SS |
| Lens | Polycarbonate, High pressure BSP(G) and HP: Tempered safety glass | Polycarbonate |
| Ring | AISI 304 SS | AISI 304 SS |
| Socket | 316L SS, 2.5” (63mm) to 4.5” (115mm): Welded one-piece socket | OT 58 brass |
| Connection | 1/4” NPT or 1/2” NPT standard, High Pressure: 1/2” BSP(G) or 9/16” autoclave or 1/4” autoclave with 9/16” gland/collar | 1/4” NPT or 1/2” NPT standard |
| Bourdon Tube | 316L SS, drawn seamless | Phosphor bronze |
| Movement | 304 SS (under and overload stops 4” to 6”) | OT 59 brass (under and overload stops 4”) |
| Pointer | 2.5” (63mm): Aluminum, anodized black, 4” (100mm), 4.5” (115mm), 6” (150mm): Aluminum, anodized black, micrometer adjustable | 4” (100mm), 4.5” (115mm): Aluminum, anodized black |
| Welding | Laser welded socket to case | Silver alloy |
| Fill Liquid | Glycerin | Glycerin |
| Over-pressure Limit | 25% for pressures up to 1,450 psi (9,998 kPa), 15% for pressures over 1,450 psi (9,998 kPa) | 25% for pressures up to 1,450 psi (9,998 kPa), 15% for pressures over 1,450 psi (9,998 kPa) |
| Socket Gasket | 2.5” (63mm), 4” (100mm), 4.5” (115mm): Welded (no gasket) 6” (150mm): Buna N for one-piece external socket seal, (silicone rubber option) | Buna N for two-piece internal socket seal |
| Fill Plug | Buna N (silicone rubber option) | Buna N (silicone rubber option) |
| Lens Ring Gasket | Buna N (silicone rubber option) | Buna N (silicone rubber option) |
| Working Pressure | Maximum 75% of full scale value | Maximum 75% of full scale value |
| Ambient Temperature | Dry: -40°F to 250°F (-40°C to 120°C) Glycerin Filled: -4°F to 150°F (-20°C to 65°C) | Dry: -40°F to 200°F (-40°C to 93°C) Glycerin Filled: -4°F to 150°F (-20°C to 65°C) |
| Process Temperature | -40°F to 250°F (-40°C to 120°C) | -40°F to 200°F (-40°C to 93°C) |
| Accuracy | 2.5” (63mm): ±1.5% of full scale value 4” (100mm), 4.5” (115mm), 6” (150mm): ±1% ANSI/ASME Grade 1A | 4” (100mm), 4.5” (115mm): ±1% ANSI/ASME Grade 1A |
| Enclosure Rating | NEMA 4X/IP66, EN60529-1 (IEC529-1) | NEMA 4X/IP66, EN60529-1 (IEC529-1) |
| Warning (brass internals only) | N/A | **WARNING:** This product can expose you to chemicals including lead, which is known to the State of California to cause cancer and birth defects or other reproductive harm. For more information go to www.P65Warnings.ca.gov. |

## Single Scale Order Codes (products in bold are normally stock in North America)

| Dial Size | 2.5" (63mm) | | 4" (100mm) | | | |
|---|---|---|---|---|---|---|
| Connection | 1/4" Bottom | 1/4" Back (CB) | 1/4" Bottom | 1/4" Back (LB) | 1/2" Bottom | 1/2" Back (LB) |
| Movement, Socket, Tube | SS | | | | | |
| 30" Hg Vac | **PFP820R6** | PFP840R6 | PFP640R6 | PFP1090R6 | PFP655R6 | - |
| 30"/0/15 psi | PFP860R1 | PFP870R1 | PFP1036R1 | PFP1244R1 | PFP1044R1 | - |
| 30"/0/30 psi | **PFP861R1** | PFP871R1 | PFP1037R1 | PFP1245R1 | PFP1045R1 | - |
| 30"/0/60 psi | PFP862R1 | PFP872R1 | PFP1038R1 | PFP1246R1 | PFP1046R1 | - |
| 30"/0/100 psi | PFP863R1 | PFP873R1 | PFP1039R1 | PFP1247R1 | PFP1047R1 | - |
| 30"/0/150 psi | **PFP864R1** | PFP874R1 | PFP1040R1 | PFP1248R1 | PFP1048R1 | - |
| 30"/0/200 psi | PFP866R1 | PFP876R1 | PFP1042R1 | PFP1249R1 | PFP1050R1 | - |
| 30"/0/300 psi | PFP867R1 | PFP877R1 | PFP1043R1 | PFP1250R1 | PFP1051R1 | - |
| 0/15 psi | **PFP821R1** | **PFP921R1** | PFP641R1 | PFP1091R1 | PFP656R1 | - |
| 0/30 psi | **PFP822R1** | **PFP922R1** | PFP642R1 | PFP1092R1 | PFP657R1 | - |
| 0/60 psi | **PFP823R1** | **PFP923R1** | PFP643R1 | PFP1093R1 | **PFP658R1** | - |
| 0/100 psi | **PFP824R1** | **PFP924R1** | PFP644R1 | PFP1094R1 | **PFP659R1** | - |
| 0/160 psi | **PFP825R1** | **PFP925R1** | PFP645R1 | PFP1095R1 | **PFP660R1** | - |
| 0/200 psi | **PFP826R1** | **PFP926R1** | PFP646R1 | PFP1096R1 | **PFP661R1** | - |
| 0/300 psi | **PFP827R1** | PFP927R1 | PFP647R1 | PFP1097R1 | **PFP662R1** | - |
| 0/400 psi | **PFP880R1** | PFP881R1 | PFP650R1 | PFP1251R1 | PFP666R1 | - |
| 0/600 psi | **PFP828R1** | **PFP928R1** | PFP648R1 | PFP1098R1 | **PFP663R**1 | - |
| 0/1,000 psi | **PFP829R1** | PFP929R1 | PFP649R1 | PFP1099R1 | **PFP664R1** | - |
| 0/1,500 psi | **PFP834R1** | PFP934R1 | - | PFP1252R1 | **PFP665R1** | PFP1190R1 |
| 0/2,000 psi | **PFP830R1** | PFP930R1 | - | PFP1253R1 | **PFP667R1** | PFP1191R1 |
| 0/3,000 psi | **PFP831R1** | PFP931R1 | - | PFP1254R1 | PFP668R1 | PFP1192R1 |
| 0/5,000 psi | **PFP832R1** | PFP852R1 | - | PFP1255R1 | **PFP669R1** | PFP1193R1 |
| 0/6,000 psi | PFP836R1 | PFP851R1 | - | PFP1259R1 | PFP675R1 | PFP1197R1 |
| 0/10,000 psi | PFP833R1 | PFP853R1 | - | PFP1256R1 | PFP670R1 | PFP1194R1 |
| 0/15,000 psi | PFP835R1 | PFP855R1 | - | PFP1257R1 | PFP671R1 | PFP1195R1 |
| 0/20,000 psi | PFP837R1 | - | - | PFP1258R1 | PFP672R1 | PFP1196R1 |

Other ranges and connection sizes available upon request.

For Win**BRIGHT** dial options refer to Custom Dials

### 2.5" Bottom Connection with Back Flange

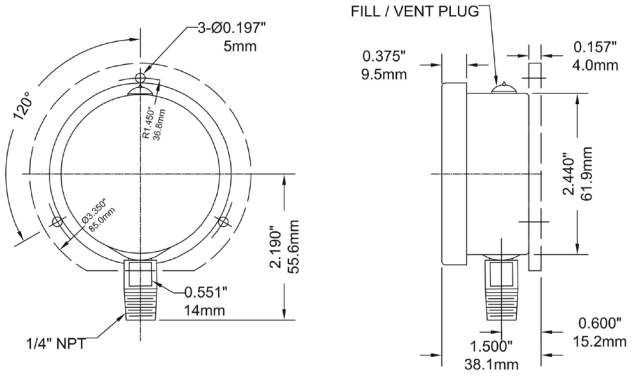


### 2.5" Back Connection with Front Flange

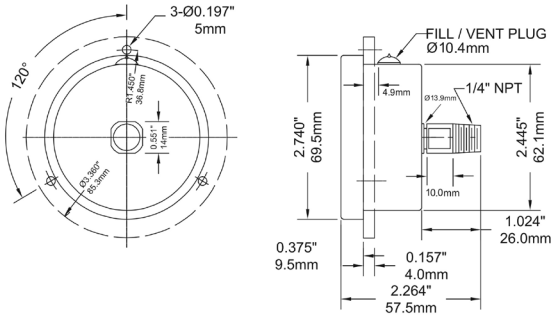

## Dual Scale Order Codes (products in bold are normally stock in North America)

| Dial Size | 2.5" (63mm) | | 4" (100mm) | | | | | | | |
|---|---|---|---|---|---|---|---|---|---|---|
| Connection | 1/4" Bottom | 1/4" Back (CB) | 1/4" Bottom | 1/4" Back (LB) | 1/4" Bottom | 1/4" Back (LB) | 1/2" Bottom | 1/2" Back (LB) | 1/2" Bottom | 1/2" Back (LB) |
| Movement, Socket, Tube | SS | | Brass | | SS | | Brass | | SS | |
| 30" Hg Vac/kPa | **PFP820** | PFP840 | PFP600 | PFP1000 | PFP640 | PFP1090 | PFP2284 | - | PFP655 | PFP2308 |
| 30"/0/15 psi/kPa | PFP860 | PFP870 | PFP1020 | PFP1028 | PFP1036 | PFP1244 | PFP2285 | - | PFP1044 | PFP2309 |
| 30"/0/30 psi/kPa | **PFP861** | PFP871 | PFP1021 | PFP1029 | **PFP1037** | PFP1245 | PFP2286 | - | PFP1045 | PFP2310 |
| 30"/0/60 psi/kPa | PFP862 | **PFP872** | PFP1022 | PFP1030 | **PFP1038** | PFP1246 | PFP2287 | - | PFP1046 | PFP2311 |
| 30"/0/100 psi/kPa | **PFP863** | PFP873 | PFP1023 | PFP1031 | PFP1039 | PFP1247 | PFP2288 | - | PFP1047 | PFP2312 |
| 30"/0/150 psi/kPa | PFP864 | PFP874 | PFP1024 | PFP1032 | PFP1040 | PFP1248 | PFP2289 | - | PFP1048 | PFP2313 |
| 30"/0/200 psi/kPa | PFP866 | PFP876 | PFP1026 | PFP1034 | PFP1042 | PFP1249 | PFP2290 | - | PFP1050 | PFP2314 |
| 30"/0/300 psi/kPa | PFP867 | **PFP877** | PFP1027 | PFP1035 | PFP1043 | PFP1250 | PFP2291 | - | PFP1051 | PFP2315 |
| 0/15 psi/kPa | **PFP821** | PFP921 | **PFP601** | PFP1001 | **PFP641** | PFP1091 | PFP2292 | - | **PFP656** | PFP2316 |
| 0/30 psi/kPa | **PFP822** | **PFP922** | **PFP602** | PFP1002 | **PFP642** | PFP1092 | PFP2293 | - | **PFP657** | PFP2317 |
| 0/60 psi/kPa | **PFP823** | **PFP923** | **PFP603** | PFP1003 | **PFP643** | PFP1093 | PFP2294 | - | **PFP658** | PFP2318 |
| 0/100 psi/kPa | **PFP824** | **PFP924** | **PFP604** | PFP1004 | **PFP644** | PFP1094 | PFP2295 | - | **PFP659** | PFP2319 |
| 0/160 psi/kPa | **PFP825** | **PFP925** | **PFP605** | PFP1005 | **PFP645** | PFP1095 | PFP2296 | - | **PFP660** | PFP2320 |
| 0/200 psi/kPa | **PFP826** | **PFP926** | **PFP606** | PFP1006 | **PFP646** | PFP1096 | PFP2297 | - | **PFP661** | PFP2321 |
| 0/300 psi/kPa | **PFP827** | **PFP927** | **PFP607** | PFP1007 | **PFP647** | PFP1097 | PFP2298 | - | **PFP662** | PFP2322 |
| 0/400 psi/kPa | **PFP880** | PFP881 | PFP610 | PFP1016 | **PFP650** | PFP1251 | PFP2299 | - | **PFP666** | PFP2323 |
| 0/600 psi/kPa | **PFP828** | **PFP928** | PFP608 | PFP1008 | PFP648 | PFP1098 | PFP2300 | - | **PFP663** | PFP2324 |
| 0/1,000 psi/kPa | **PFP829** | **PFP929** | PFP609 | - | PFP649 | PFP1099 | PFP624 | PFP1009 | **PFP664** | PFP2325 |
| 0/1,500 psi/kPa | PFP834 | PFP934 | - | - | PFP2301 | PFP1252 | PFP625 | PFP1010 | PFP665 | PFP1190 |
| 0/2,000 psi/kPa | **PFP830** | **PFP930** | - | - | PFP2302 | PFP1253 | PFP626 | PFP1011 | PFP667 | PFP1191 |
| 0/3,000 psi/kPa | **PFP831** | **PFP931** | - | - | PFP2303 | PFP1254 | PFP627 | PFP1012 | **PFP668** | PFP1192 |
| 0/5,000 psi/kPa | **PFP832** | **PFP852** | - | - | PFP2304 | PFP1255 | PFP628 | PFP1013 | PFP669 | PFP1193 |
| 0/6,000 psi/kPa | **PFP836** | PFP851 | - | - | PFP2305 | PFP1259 | PFP631 | PFP1015 | PFP675 | PFP1197 |
| 0/10,000 psi/kPa | **PFP833** | PFP853 | - | - | PFP2306 | PFP1256 | PFP629 | PFP1014 | PFP670 | PFP1194 |
| 0/15,000 psi/kPa | PFP835 | PFP855 | - | - | PFP2307 | PFP1257 | PFP630 | PFP1018 | PFP671 | PFP1195 |
| 0/20,000 psi/kPa | PFP837 | - | - | - | - | PFP1258 | PFP639 | PFP1019 | PFP672 | PFP1196 |

Other ranges and connection sizes available upon request.

For Win**BRIGHT** dial options refer to Custom Dials

### 4" Bottom Connection with Back Flange

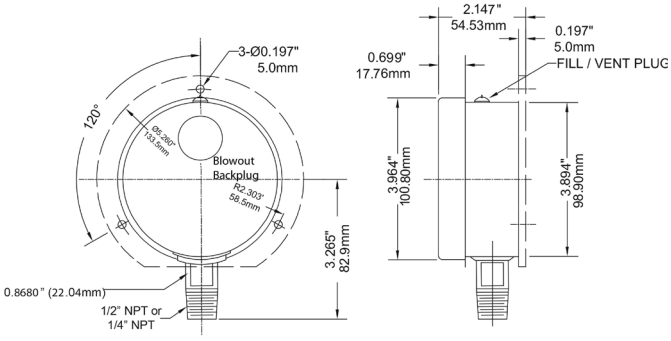

## High Pressure Order Codes

| Dial Size | 4" (100mm) | | | |
|---|---|---|---|---|
| Connection | 1/2" BSP(G) Bottom | 1/2" BSP(G) Back (LB) | 9/16" HP Bottom | 1/4" HP Autoclave w/9/16" gland and collar Bottom |
| Movement, Socket, Tube | SS | | | |
| 0/20,000 psi/kPa | - | - | PFP9601 | PFP9621 |
| 0/25,000 psi/kPa | PFP9602T1 | PFP9652T1 | PFP9602 | PFP9622 |
| 0/30,000 psi/kPa | PFP9603T1 | PFP9653T1 | PFP9603 | PFP9623 |
| 0/35,000 psi/kPa | PFP9604T1 | PFP9654T1 | PFP9604 | PFP9624 |
| 0/40,000 psi/kPa | PFP9605T1 | PFP9655T1 | PFP9605 | PFP9625 |

Other ranges and connection sizes available upon request.

For Win**BRIGHT** dial options refer to Custom Dials

## 4" Bottom Connection 1/4" HP Autoclave w/9/16" Gland and Collar

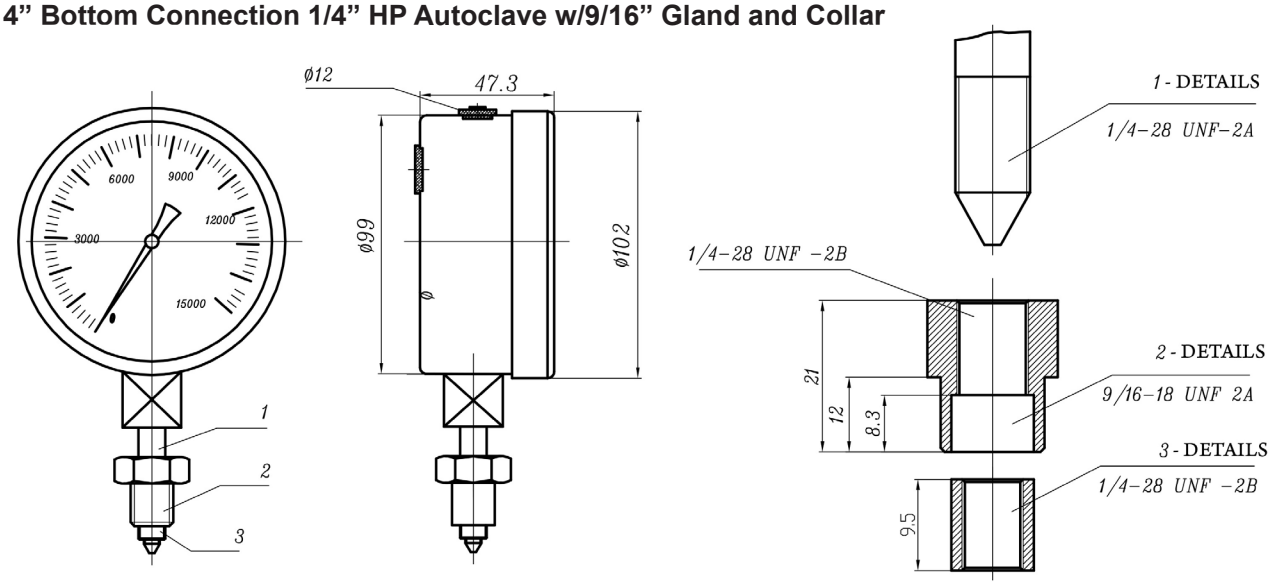


## 4" Back Connection HP 1/2" BSP(G)

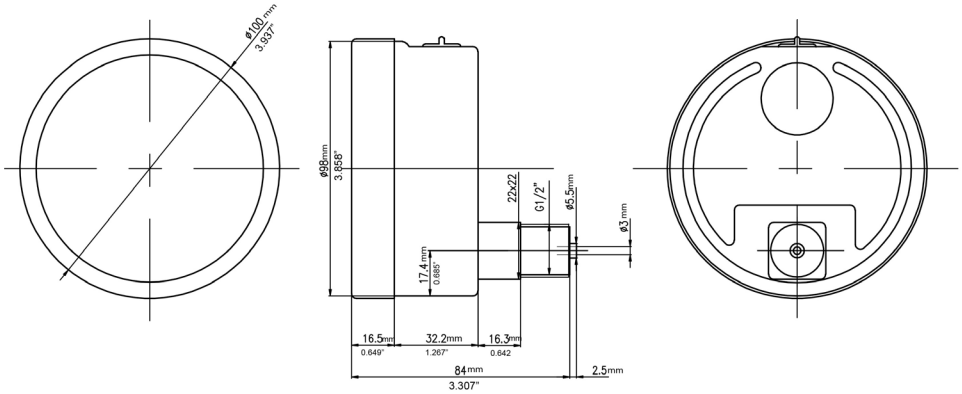

## Dual Scale Order Codes

| Dial Size | 4.5" (115mm) | | | | | | | |
|---|---|---|---|---|---|---|---|---|
| Connection | 1/4" Bottom | 1/4" Back (LB) | 1/2" Bottom | 1/2" Back (LB) | 1/4" Bottom | 1/4" Back (LB) | 1/2" Bottom | 1/2" Back (LB) |
| Movement, Socket, Tube | Brass | | | | SS | | | |
| 30" Hg Vac/kPa | PFP500 | PFP1300 | PFP550 | PFP1350 | PFP700 | PFP400 | PFP750 | PFP450 |
| 30"/0/15 psi/kPa | PFP501 | PFP1301 | PFP551 | PFP1351 | PFP701 | PFP401 | PFP751 | PFP451 |
| 30"/0/30 psi/kPa | PFP502 | PFP1302 | PFP552 | PFP1352 | PFP702 | PFP402 | PFP752 | PFP452 |
| 30"/0/60 psi/kPa | PFP503 | PFP1303 | PFP553 | PFP1353 | PFP703 | PFP403 | PFP753 | PFP453 |
| 30"/0/100 psi/kPa | PFP504 | PFP1304 | PFP554 | PFP1354 | PFP704 | PFP404 | PFP754 | PFP454 |
| 30"/0/150 psi/kPa | PFP505 | PFP1305 | PFP555 | PFP1355 | PFP705 | PFP405 | PFP755 | PFP455 |
| 30"/0/200 psi/kPa | PFP506 | PFP1306 | PFP556 | PFP1356 | PFP706 | PFP406 | PFP756 | PFP456 |
| 30"/0/300 psi/kPa | PFP507 | PFP1307 | PFP557 | PFP1357 | PFP707 | PFP407 | PFP757 | PFP457 |
| 0/15 psi/kPa | PFP508 | PFP1308 | PFP558 | PFP1358 | PFP708 | PFP408 | PFP758 | PFP458 |
| 0/30 psi/kPa | PFP509 | PFP1309 | PFP559 | PFP1359 | PFP709 | PFP409 | PFP759 | PFP459 |
| 0/60 psi/kPa | PFP510 | PFP1310 | PFP560 | PFP1360 | PFP710 | PFP410 | PFP760 | PFP460 |
| 0/100 psi/kPa | PFP511 | PFP1311 | PFP561 | PFP1361 | PFP711 | PFP411 | PFP761 | PFP461 |
| 0/160 psi/kPa | PFP512 | PFP1312 | PFP562 | PFP1362 | PFP712 | PFP412 | PFP762 | PFP462 |
| 0/200 psi/kPa | PFP513 | PFP1313 | PFP563 | PFP1363 | PFP713 | PFP413 | PFP763 | PFP463 |
| 0/300 psi/kPa | PFP514 | PFP1314 | PFP564 | PFP1364 | PFP714 | PFP414 | PFP764 | PFP464 |
| 0/400 psi/kPa | PFP515 | PFP1315 | PFP565 | PFP1365 | PFP715 | PFP415 | PFP765 | PFP465 |
| 0/600 psi/kPa | PFP516 | PFP1316 | PFP566 | PFP1366 | PFP716 | PFP416 | PFP766 | PFP466 |
| 0/1,000 psi/kPa | PFP517 | PFP1317 | PFP567 | PFP1367 | PFP717 | PFP417 | PFP767 | PFP467 |
| 0/1,500 psi/kPa | PFP518 | PFP1318 | PFP568 | PFP1368 | PFP718 | PFP418 | PFP768 | PFP468 |
| 0/2,000 psi/kPa | PFP519 | PFP1319 | PFP569 | PFP1369 | PFP719 | PFP419 | PFP769 | PFP469 |
| 0/3,000 psi/kPa | PFP520 | PFP1320 | PFP570 | PFP1370 | PFP720 | PFP420 | PFP770 | PFP470 |
| 0/5,000 psi/kPa | PFP521 | PFP1321 | PFP571 | PFP1371 | PFP721 | PFP421 | PFP771 | PFP471 |
| 0/6,000 psi/kPa | PFP522 | PFP1322 | PFP572 | PFP1372 | PFP722 | PFP422 | PFP772 | PFP472 |
| 0/10,000 psi/kPa | PFP523 | PFP1323 | PFP573 | PFP1373 | PFP723 | PFP423 | PFP773 | PFP473 |
| 0/15,000 psi/kPa | PFP524 | PFP1324 | PFP574 | PFP1374 | PFP724 | PFP424 | PFP774 | PFP474 |
| 0/20,000 psi/kPa | PFP525 | PFP1325 | PFP575 | PFP1375 | PFP725 | PFP425 | PFP775 | PFP475 |

Other ranges and connection sizes available upon request.

### 4.5" Bottom Connection with Back Flange

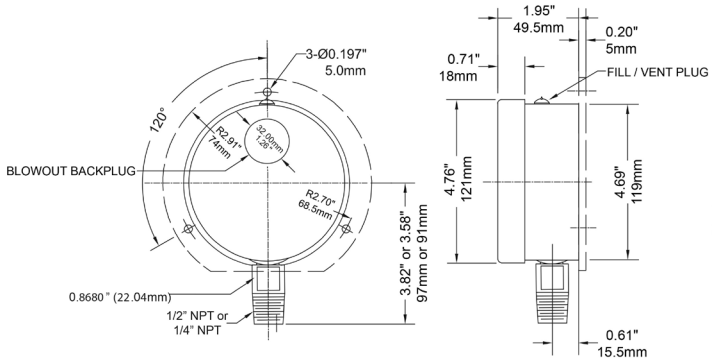


### 4.5" Back Connection with Front Flange

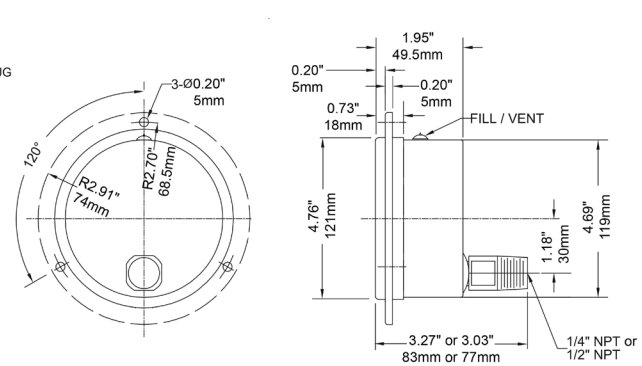

## Dual Scale Order Codes

| Dial Size | 6" (150mm) | | | |
|---|---|---|---|---|
| Connection | 1/4" Bottom | 1/4" Back (LB) | 1/2" Bottom | 1/2" Back (LB) |
| Movement, Socket, Tube | SS | | | |
| 30" Hg Vac/kPa | PFP1078 | PFP1168 | PFP2326 | - |
| 30"/0/15 psi/kPa | PFP1079 | - | PFP2327 | - |
| 30"/0/30 psi/kPa | PFP1052 | - | PFP2328 | - |
| 30"/0/60 psi/kPa | PFP1053 | - | PFP2329 | - |
| 30"/0/100 psi/kPa | PFP1054 | - | PFP2330 | - |
| 30"/0/150 psi/kPa | PFP1055 | - | PFP2331 | - |
| 30"/0/200 psi/kPa | PFP1057 | - | PFP2332 | - |
| 30"/0/300 psi/kPa | PFP1058 | - | PFP2333 | - |
| 0/15 psi/kPa | PFP1059 | PFP1159 | PFP2334 | - |
| 0/30 psi/kPa | PFP1060 | PFP1160 | PFP2335 | - |
| 0/60 psi/kPa | PFP1061 | PFP1161 | PFP2336 | - |
| 0/100 psi/kPa | PFP1062 | PFP1162 | PFP2337 | - |
| 0/160 psi/kPa | PFP1063 | PFP1163 | PFP2338 | - |
| 0/200 psi/kPa | PFP1064 | PFP1164 | PFP2339 | - |
| 0/300 psi/kPa | PFP1065 | PFP1165 | PFP2340 | - |
| 0/400 psi/kPa | PFP1077 | - | PFP2341 | - |
| 0/600 psi/kPa | PFP1066 | PFP1166 | PFP2342 | - |
| 0/1,000 psi/kPa | PFP1067 | PFP1167 | PFP1080 | - |
| 0/1,500 psi/kPa | PFP1068 | - | PFP1081 | PFP1169 |
| 0/2,000 psi/kPa | PFP1069 | - | PFP1082 | PFP1170 |
| 0/3,000 psi/kPa | PFP1070 | - | PFP1083 | PFP1171 |
| 0/4,000 psi/kPa | PFP1071 | - | PFP1084 | - |
| 0/5,000 psi/kPa | PFP1072 | - | PFP1085 | PFP1172 |
| 0/6,000 psi/kPa | PFP1289 | - | PFP1089 | PFP1176 |
| 0/10,000 psi/kPa | PFP1073 | - | PFP1086 | PFP1173 |
| 0/15,000 psi/kPa | PFP1074 | - | PFP1087 | PFP1174 |
| 0/20,000 psi/kPa | PFP1075 | - | PFP1088 | PFP1175 |

Other ranges and connection sizes available upon request.

For Win**BRIGHT** dial options refer to Custom Dials

### 6" Bottom Connection

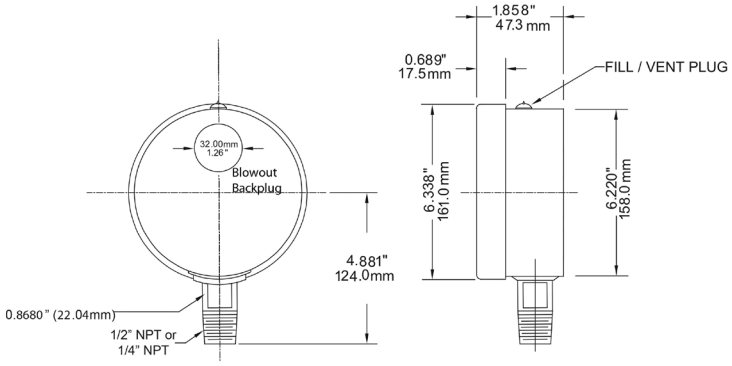


### 6" Back Connection with Front Flange

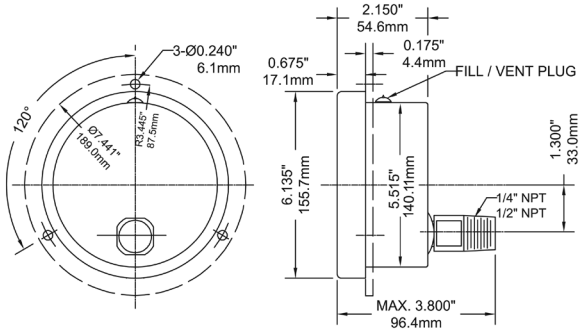

# PFP Premium Stainless Steel Liquid Filled Gauge

## Engineering Codes

| PFP ENGINEERED PART NUMBER | | P F P - | | - | | - | | - | | - | | - | | - | | - | |
|---|---|---|---|---|---|---|---|---|---|---|---|---|---|---|---|---|---|
| **DIAL SIZE** | 2.5" (63mm) | | 2 5 | | | | | | | | | | | | | | |
| | 4" (100mm) | | 4 0 | | | | | | | | | | | | | | |
| | 4.5" (115mm) | | 4 5 | | | | | | | | | | | | | | |
| | 6" (160mm) | | 6 0 | | | | | | | | | | | | | | |
| **PRESSURE SCALE & RANGE** | SEE PRESSURE RANGES | | | | # # # | | | | | | | | | | | | |
| **CASE MATERIAL** | 304SS | | | | | | S | | | | | | | | | | |
| | 316SS | | | | | | S S | | | | | | | | | | |
| | 316L | | | | | | S L | | | | | | | | | | |
| **WETTED PARTS** | BRASS/BRONZE | | | | | | | | B R | | | | | | | | |
| | 316L | | | | | | | | S S | | | | | | | | |
| | MONEL | | | | | | | | M | | | | | | | | |
| **PROCESS CONNECTION SIZE** | 1/4" | | | | | | | | | | N 4 | | | | | | |
| | 3/8" | | | | | | | | | | N 3 | | | | | | |
| | 1/2" | | | | | | | | | | N 2 | | | | | | |
| | 3/4" | | | | | | | | | | N 5 | | | | | | |
| | 9/16" HP | | | | | | | | | | H 9 | | | | | | |
| | 1/4" HP W/GLAND & COLLAR | | | | | | | | | | H 4 | | | | | | |
| **PROCESS CONNECTION TYPE** | NPT | | | | | | | | | | | N | | | | | |
| | 28-UNF HIGH PRESSURE | | | | | | | | | | | H P | | | | | |
| | BSPP (G), PARALLEL | | | | | | | | | | | G | | | | | |
| | BSPT (R), TAPERED | | | | | | | | | | | R | | | | | |
| | BSPT (SPIGOT) | | | | | | | | | | | B | | | | | |
| | M14*1.5 | | | | | | | | | | | M 4 | | | | | |
| | M20*1.5 | | | | | | | | | | | M 2 | | | | | |
| **PROCESS CONNECTION LOCATION** | BOTTOM, STEM | | | | | | | | | | | | B | | | | |
| | LOWER BACK | | | | | | | | | | | | L B | | | | |
| | CENTRE BACK | | | | | | | | | | | | C B | | | | |
| | 12 O'CLOCK | | | | | | | | | | | | 1 2 | | | | |
| | 3 O'CLOCK | | | | | | | | | | | | 3 | | | | |
| | 6 O'CLOCK | | | | | | | | | | | | 6 | | | | |
| | 9 O'CLOCK | | | | | | | | | | | | 9 | | | | |
| **ACCURACY %** | 0.5 | | | | | | | | | | | | | K | | | |
| | 1.0 | | | | | | | | | | | | | I | | | |
| | 1.5 | | | | | | | | | | | | | H | | | |
| **OPTIONS, LIST IN ALPHA-NUMERIC ORDER** | GLYCERIN FILL (FOOD GRADE) | | | | | | | | | | | | | | G F | | |
| | GLYCERIN WATER FILL | | | | | | | | | | | | | | G W | | |
| | SILICONE FILL | | | | | | | | | | | | | | S F | | |
| | SILICONE FILL, LOW TEMPERATURE | | | | | | | | | | | | | | S T | | |
| | FLUOROLUBE FILLED | | | | | | | | | | | | | | F O | | |
| | HALOCARBON FILLED | | | | | | | | | | | | | | H F | | |
| | DRY CASE | | | | | | | | | | | | | | D R Y | | |
| | POLYCARBONATE LENS | | | | | | | | | | | | | | P L | | |
| | GLASS LENS | | | | | | | | | | | | | | G L | | |
| | SAFETY GLASS, LAMINATED | | | | | | | | | | | | | | S G | | |
| | SAFETY GLASS, TEMPERED | | | | | | | | | | | | | | T G | | |
| | FRONT FLANGE | | | | | | | | | | | | | | F F | | |
| | BACK FLANGE | | | | | | | | | | | | | | B F | | |
| | U-CLAMP | | | | | | | | | | | | | | U C | | |
| | BLOW-OUT DISK | | | | | | | | | | | | | | B D | | |
| | 316SS POLISHED RING | | | | | | | | | | | | | | 6 R | | |
| | 316L POLISHED RING | | | | | | | | | | | | | | L R | | |
| | RESTRICTOR SCREW | | | | | | | | | | | | | | R S | | |
| | RESTRICTED ORIFICE | | | | | | | | | | | | | | R O | | |
| | NO RESTRICTOR SCREW / ORIFICE | | | | | | | | | | | | | | N R | | |
| | MOVEMENT 316SS | | | | | | | | | | | | | | M S | | |
| | MOVEMENT 316L | | | | | | | | | | | | | | M L | | |
| | EN-837 ON-DIAL | | | | | | | | | | | | | | E N | | |
| | ASME B40.100 ON-DIAL | | | | | | | | | | | | | | A S | | |
| | OVER & UNDER PRESSURE STOP | | | | | | | | | | | | | | O U S | | |
| | PROTECTIVE RUBBER BOOT | | | | | | | | | | | | | | P B | | |
| | CUSTOM DIAL, SIMPLE | | | | | | | | | | | | | | C 1 | | |
| | CUSTOM DIAL, COMPLEX | | | | | | | | | | | | | | C 2 | | |
| | WINBRIGHT DIAL REFLECTIVE FLUORESCENT YELLOW-GREEN | | | | | | | | | | | | | | W B Y G | | |
| | WINBRIGHT DIAL REFLECTIVE FLUORESCENT YELLOW | | | | | | | | | | | | | | W B Y | | |
| | WINBRIGHT DIAL FLUORESCENT YELLOW | | | | | | | | | | | | | | W B F Y | | |
| | WINBRIGHT DIAL REFLECTIVE ORANGE | | | | | | | | | | | | | | W B O | | |
| | WINBRIGHT DIAL REFLECTIVE WHITE | | | | | | | | | | | | | | W B W | | |
| | WINBRIGHT DIAL GLOW-IN-THE-DARK WHITE | | | | | | | | | | | | | | W B G | | |
| | MAXIMUM ADJUSTABLE POINTER | | | | | | | | | | | | | | M A X | | |
| | MINIMUM ADJUSTABLE POINTER | | | | | | | | | | | | | | M I N | | |
| | RED SET POINTER | | | | | | | | | | | | | | R S P | | |
| | ROSH COMPLIANT | | | | | | | | | | | | | | R | | |
| | LEAD FREE, NSF 61/372 COMPLIANT | | | | | | | | | | | | | | L F | | |
| | NACE COMPLIANT | | | | | | | | | | | | | | N | | |
| | STABILIZR® | | | | | | | | | | | | | | Z R | | |
| | SPECIAL | | | | | | | | | | | | | | Z # # # | | |

# PFP

# Premium Stainless Steel Liquid Filled Gauge for Panel Mounting




## Description & Features:

- Liquid filled stainless steel case protects against extreme vibration and pulsation
- Lower back mount with front flange for panel mounting
- Bayonet ring
- Dual and single scale available (psi/kPa & psi only)
- Stainless steel wetted parts
- Restricted orifice standard on dual scale (optional on single scale)
- Safety glass
- ASME B40.100 compliant (EN837-1 available)
- CRN registered
- 5 year warranty

## Applications:

- Outdoor and severe ambient and process conditions
- Use where harmful vibration and pulsation are present
- Panel builders in hydraulic equipment, oil field equipment, pumps, compressors and process industries

| Specifications | |
|---|---|
| **Dial** | 2.5” (63mm) white aluminum with black and red markings |
| **Case** | AISI 304 SS |
| **Lens** | Safety glass |
| **Ring** | AISI 304 SS |
| **Socket** | 316L SS welded one-piece socket |
| **Connection** | 1/4” NPT |
| **Bourdon Tube** | 316L SS, drawn seamless |
| **Movement** | 304 SS |
| **Pointer** | Aluminum, anodized black |
| **Welding** | Laser welded socket to case |
| **Fill Liquid** | Glycerin |
| **Over-pressure Limit** | 25% for pressures up to 1,450 psi (9,998 kPa),<br>15% for pressures over 1,450 psi (9,998 kPa) |
| **Fill Plug** | Buna N (silicone rubber option) |
| **Lens Ring Gasket** | Buna N (silicone rubber option) |
| **Working Pressure** | Maximum 75% of full scale value |
| **Ambient Temperature** | Dry: -40°F to 250°F (-40°C to 120°C)<br>Glycerin Filled: -4°F to 150°F (-20°C to 65°C) |
| **Process Temperature** | -40°F to 250°F (-40°C to 120°C) |
| **Accuracy** | ±1.5% of full scale value |
| **Enclosure Rating** | NEMA 4X/IP66, EN60529-1 (IEC529-1) |

# Premium Stainless Steel Liquid Filled Gauge for Panel Mounting



## Single Scale Order Codes (products in bold are normally stock in North America)

| Dial Size | 2.5" (63mm) |
|---|---|
| Connection | 1/4" Back (LBM) |
| Movement, Socket, Tube | SS |
| 30" Hg Vac | PFP3772R6 |
| 30"/0/15 psi | PFP3773R1 |
| 30"/0/30 psi | PFP3774R1 |
| 30"/0/60 psi | PFP3775R1 |
| 30"/0/100 psi | PFP3776R1 |
| 30"/0/150 psi | PFP3777R1 |
| 30"/0/200 psi | PFP3778R1 |
| 30"/0/300 psi | PFP3779R1 |
| 0/15 psi | PFP3780R1 |
| 0/30 psi | PFP3781R1 |
| 0/60 psi | PFP3782R1 |
| 0/100 psi | PFP3783R1 |
| 0/160 psi | PFP3784R1 |
| 0/200 psi | PFP3785R1 |
| 0/300 psi | PFP3786R1 |
| 0/400 psi | PFP3787R1 |
| 0/600 psi | PFP3788R1 |
| 0/1,000 psi | PFP3789R1 |
| 0/1,500 psi | PFP3790R1 |
| 0/2,000 psi | PFP3791R1 |
| 0/3,000 psi | PFP3792R1 |
| 0/5,000 psi | PFP3793R1 |
| 0/6,000 psi | PFP3794R1 |
| 0/7,500 psi | PFP3795R1 |
| 0/10,000 psi | PFP3796R1 |
| 0/15,000 psi | PFP3797R1 |
| 0/20,000 psi | PFP3798R1 |

## Dual Scale Order Codes

| Dial Size | 2.5" (63mm) |
|---|---|
| Connection | 1/4" Back (LBM) |
| Movement, Socket, Tube | SS |
| 30" Hg Vac/kPa | PFP3772 |
| 30"/0/15 psi/kPa | PFP3773 |
| 30"/0/30 psi/kPa | PFP3774 |
| 30"/0/60 psi/kPa | PFP3775 |
| 30"/0/100 psi/kPa | PFP3776 |
| 30"/0/150 psi/kPa | PFP3777 |
| 30"/0/200 psi/kPa | PFP3778 |
| 30"/0/300 psi/kPa | PFP3779 |
| 0/15 psi/kPa | PFP3780 |
| 0/30 psi/kPa | PFP3781 |
| 0/60 psi/kPa | PFP3782 |
| 0/100 psi/kPa | PFP3783 |
| 0/160 psi/kPa | PFP3784 |
| 0/200 psi/kPa | PFP3785 |
| 0/300 psi/kPa | PFP3786 |
| 0/400 psi/kPa | PFP3787 |
| 0/600 psi/kPa | PFP3788 |
| 0/1,000 psi/kPa | PFP3789 |
| 0/1,500 psi/kPa | PFP3790 |
| 0/2,000 psi/kPa | PFP3791 |
| 0/3,000 psi/kPa | PFP3792 |
| 0/5,000 psi/kPa | PFP3793 |
| 0/6,000 psi/kPa | PFP3794 |
| 0/7,500 psi/kPa | PFP3795 |
| 0/10,000 psi/kPa | PFP3796 |
| 0/15,000 psi/kPa | PFP3797 |
| 0/20,000 psi/kPa | PFP3798 |

Other ranges and connection sizes available upon request. For scale change, refer to How to Order Guide for scale codes.

**Option suffix:**

25DRY = Supply 2.5" (63mm) gauge dry
25SS = 2.5" (63mm) 316 SS case
MAXI25 = 2.5" (63mm) Maxi Pointer
EN = EN837-1 compliant
REST = Restrictor screw (psi only)
SF25 = 2.5" (63mm) Silicone filled

## 2.5" Lower Back Connection with Front Flange

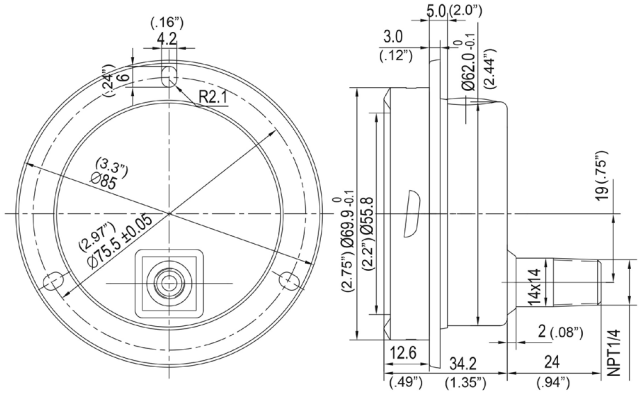


Dimensions in mm (inches)

# PFQ, PFQ-LF PFQ-UBA

# Stainless Steel Liquid Filled Gauge, Lead Free Stainless Steel Liquid Filled Gauge




1. Optional U-Clamp
2. Optional Front Flange

Note; RoHS applies SS internals only

## Description & Features:

- Pulsation resistant, liquid filled stainless steel case
- Glycerin filled standard
- Brass or stainless steel internals
- Restricted orifice standard on dual scale
- Ventable plug on 2.5” (63mm) and 4” (100mm) bottom mount (excluding SAE connection)
- Crimp-On bezel
- Single (psi) or dual scale (psi/kPa)/(psi/bar) available
- Dry case available
- ASME B40.100 compliant (EN837-1 available on 2” (50mm) dial and up)
- CRN registered Lead free version NSF-61-372 and UBA certified
- 5 year warranty

## Applications:

- Ideal for pumps, compressors, hydraulic presses, machinery, pneumatic equipment and motors in harsh environments
- NSF and UBA versions suitable for drinking water systems
- Use where harmful vibration and pulsation are present

| Specifications | Stainless Steel Internals | Brass/Lead Free Brass Internals |
|---|---|---|
| Dial | 1.5” (40mm), 2” (50mm), 2.5” (63mm), 4” (100mm), white aluminum with black and red markings | 1.5” (40mm), 2” (50mm), 2.5” (63mm), 4” (100mm), white aluminum with black and red markings |
| Case | AISI 304 SS | AISI 304 SS |
| Lens | Polycarbonate | Polycarbonate |
| Ring | AISI 304 SS, Crimp-On | AISI 304 SS, Crimp-On |
| Socket | AISI 316 SS with restrictor screw (dual scale only) | OT 58 brass with restricted orifice (dual scale only) or lead free brass with restricted orifice (dual scale only), NSF-61-372 and UBA certified |
| Connection | 1/8”, 1/4” or 1/2” NPT | 1/8”, 1/4” or 1/2” NPT or 7/16-20 SAE standard with restricted orifice |
| Fill Liquid | Glycerin | Glycerin |
| Bourdon Tube | 1.5” (40mm), 2” (50mm): SS C or coil shaped<br>2.5” (63mm), 4” (100mm): AISI 316 SS C or coil shaped | Phosphor bronze C or coil shaped |
| Movement | SS | PFQ: OT 59 brass<br>PFQ-LF/UBA (1.5”, 2”, 2.5”): SS, PFQ-LF/UBA (4”): Lead free brass, NSF-61-372 and UBA certified |
| Pointer | Aluminum, anodized black | Aluminum, anodized black |
| Welding | TIG | Silver alloy |
| Over-pressure Limit | 25% for pressures up to 1,450 psi (9,998 kPa),<br>15% for pressures over 1,450 psi (9,998 kPa) | 25% for pressures up to 1,450 psi (9,998 kPa),<br>15% for pressures over 1,450 psi (9,998 kPa) |
| Socket Gasket | Buna N for two-piece internal socket seal | Buna N for two-piece internal socket seal |
| Fill Plug | Buna N | Buna N |
| Lens Ring Gasket | Silicone rubber | Silicone rubber |
| Working Pressure | Maximum 75% of full scale value | Maximum 75% of full scale value |
| Ambient/Process Temperature | Dry/Silicone Filled: -40°F to 200°F (-40°C to 93°C)<br>Glycerin Filled: -4°F to 150°F (-20°C to 65°C) | Dry/Silicone Filled: -40°F to 200°F (-40°C to 93°C)<br>Glycerin Filled: -4°F to 150°F (-20°C to 65°C) |
| Accuracy | 1.5” (40mm), 2” (50mm): ±2.5% of full scale value<br>2.5” (63mm), 4” (100mm): ±1.5% of full scale value | 1.5” (40mm), 2” (50mm): ±2.5% of full scale value<br>2.5” (63mm), 4” (100mm): ±1.5% of full scale value |
| Enclosure Rating | IP65 | IP65 |
| Warning (brass and lead free brass internals only) | N/A | **WARNING:** This product can expose you to chemicals including lead, which is known to the State of California to cause cancer and birth defects or other reproductive harm. For more information go to www.P65Warnings.ca.gov. |

# Stainless Steel Liquid Filled Gauge, Lead Free Stainless Steel Liquid Filled Gauge



## Dual Scale Order Codes (products in bold are normally stock in North America)

| Dial Size | 1.5" (40mm) | | | |
|---|---|---|---|---|
| Connection | 1/8" Bottom | 1/8" Back (CB) | 1/8" Bottom | 1/8" Back (CB) |
| Movement, Socket, Tube | Brass | | SS | |
| 30" Hg Vac/kPa | - | - | PFQ1200 | PFQ1220 |
| 0/15 psi/kPa | - | - | PFQ1201 | PFQ1221 |
| 0/30 psi/kPa | PFQ1102 | **PFQ1122** | PFQ1202 | **PFQ1222** |
| 0/60 psi/kPa | PFQ1103 | **PFQ1123** | **PFQ1203** | PFQ1223 |
| 0/100 psi/kPa | PFQ1104 | **PFQ1124** | **PFQ1204** | **PFQ1224** |
| 0/160 psi/kPa | **PFQ1105** | **PFQ1125** | PFQ1205 | **PFQ1225** |
| 0/200 psi/kPa | PFQ1106 | PFQ1126 | PFQ1206 | **PFQ1226** |
| 0/300 psi/kPa | PFQ1107 | **PFQ1127** | **PFQ1207** | PFQ1227 |
| 0/600 psi/kPa | **PFQ1108** | PFQ1128 | PFQ1208 | PFQ1228 |
| 0/1,000 psi/kPa | PFQ1109 | **PFQ1129** | PFQ1209 | PFQ1229 |
| 0/1,500 psi/kPa | PFQ1110 | PFQ1130 | PFQ1210 | PFQ1230 |
| 0/2,000 psi/kPa | PFQ1111 | **PFQ1131** | PFQ1211 | PFQ1231 |
| 0/3,000 psi/kPa | PFQ1112 | **PFQ1132** | **PFQ1212** | PFQ1232 |
| 0/5,000 psi/kPa | PFQ1113 | **PFQ1133** | PFQ1213 | **PFQ1233** |

## PFQ-LF Order Codes

| Dial Size | 1.5" (40mm) | |
|---|---|---|
| Connection | 1/8" Bottom | 1/8" Back (CB) |
| Movement, Socket, Tube | Lead Free Brass | |
| 0/30 psi/kPa | PFQ1102LF | PFQ1122LF |
| 0/60 psi/kPa | PFQ1103LF | PFQ1123LF |
| 0/100 psi/kPa | PFQ1104LF | PFQ1124LF |
| 0/160 psi/kPa | PFQ1105LF | PFQ1125LF |
| 0/200 psi/kPa | PFQ1106LF | PFQ1126LF |
| 0/300 psi/kPa | PFQ1107LF | PFQ1127LF |
| 0/600 psi/kPa | PFQ1108LF | PFQ1128LF |
| 0/1,000 psi/kPa | PFQ1109LF | PFQ1129LF |
| 0/1,500 psi/kPa | PFQ1110LF | PFQ1130LF |
| 0/2,000 psi/kPa | PFQ1111LF | PFQ1131LF |
| 0/3,000 psi/kPa | PFQ1112LF | PFQ1132LF |
| 0/5,000 psi/kPa | PFQ1113LF | PFQ1133LF |

Other ranges and connection sizes available upon request.

# Stainless Steel Liquid Filled Gauge, Lead Free Stainless Steel Liquid Filled Gauge



## Single Scale Order Codes

| Dial Size | 2" (50mm) | | | | | | | |
|---|---|---|---|---|---|---|---|---|
| Connection | 1/8" Bottom | 1/8" Back (CB) | 1/8" Bottom | 1/8" Back (CB) | 1/4" Bottom | 1/4" Back (CB) | 1/4" Bottom | 1/4" Back (CB) |
| Movement, Socket, Tube | Brass | | SS | | Brass | | SS | |
| 30" Hg Vac | PFQ2400R6 | PFQ2426R6 | PFQ2248R6 | PFQ2309R6 | PFQ2452R6 | PFQ2478R6 | PFQ2247R6 | PFQ2246R6 |
| 30"/0/15 psi | PFQ2401R1 | PFQ2427R1 | PFQ2295R1 | PFQ2310R1 | PFQ2453R1 | PFQ2479R1 | PFQ2271R1 | PFQ2282R1 |
| 30"/0/30 psi | PFQ2402R1 | PFQ2428R1 | PFQ2241R1 | PFQ2311R1 | PFQ2454R1 | PFQ2480R1 | PFQ2272R1 | PFQ2283R1 |
| 30"/0/60 psi | PFQ2403R1 | PFQ2429R1 | PFQ2296R1 | PFQ2312R1 | PFQ2455R1 | PFQ2481R1 | PFQ2273R1 | PFQ2242R1 |
| 30"/0/100 psi | PFQ2404R1 | PFQ2430R1 | PFQ2297R1 | PFQ2313R1 | PFQ2456R1 | PFQ2482R1 | PFQ2274R1 | PFQ2284R1 |
| 30"/0/160 psi | PFQ2405R1 | PFQ2431R1 | PFQ2298R1 | PFQ2314R1 | PFQ2457R1 | PFQ2483R1 | PFQ2275R1 | PFQ2285R1 |
| 30"/0/200 psi | PFQ2406R1 | PFQ2432R1 | PFQ2299R1 | PFQ2315R1 | PFQ2458R1 | PFQ2484R1 | PFQ2276R1 | PFQ2286R1 |
| 30"/0/300 psi | PFQ2407R1 | PFQ2433R1 | PFQ2300R1 | PFQ2316R1 | PFQ2459R1 | PFQ2485R1 | PFQ2277R1 | PFQ2287R1 |
| 0/15 psi | PFQ2408R1 | PFQ2434R1 | PFQ2218R1 | PFQ2217R1 | PFQ2460R1 | PFQ2486R1 | PFQ2215R1 | PFQ2214R1 |
| 0/30 psi | PFQ2409R1 | PFQ2435R1 | PFQ2253R1 | PFQ2252R1 | PFQ2461R1 | PFQ2487R1 | PFQ2250R1 | PFQ2249R1 |
| 0/60 psi | PFQ2410R1 | PFQ2436R1 | PFQ2270R1 | PFQ2269R1 | PFQ2462R1 | PFQ2488R1 | PFQ2266R1 | PFQ2265R1 |
| 0/100 psi | PFQ2411R1 | PFQ2437R1 | PFQ2209R1 | PFQ2208R1 | PFQ2463R1 | PFQ2489R1 | PFQ2205R1 | PFQ2204R1 |
| 0/160 psi | PFQ2412R1 | PFQ2438R1 | PFQ2206R1 | PFQ2207R1 | PFQ2464R1 | PFQ2490R1 | PFQ2220R1 | PFQ2219R1 |
| 0/200 psi | PFQ2413R1 | PFQ2439R1 | PFQ2301R1 | PFQ2951R1 | PFQ2465R1 | PFQ2491R1 | PFQ2267R1 | PFQ2268R1 |
| 0/300 psi | PFQ2414R1 | PFQ2440R1 | PFQ2245R1 | PFQ2318R1 | PFQ2466R1 | PFQ2492R1 | PFQ2244R1 | PFQ2243R1 |
| 0/400 psi | PFQ2415R1 | PFQ2441R1 | PFQ2302R1 | PFQ2319R1 | PFQ2467R1 | PFQ2493R1 | PFQ2254R1 | PFQ2288R1 |
| 0/600 psi | PFQ2416R1 | PFQ2442R1 | PFQ2264R1 | PFQ2320R1 | PFQ2468R1 | PFQ2494R1 | PFQ2278R1 | PFQ2289R1 |
| 0/1,000 psi | PFQ2417R1 | PFQ2443R1 | PFQ2203R1 | PFQ2321R1 | PFQ2469R1 | PFQ2495R1 | PFQ2202R1 | PFQ2201R1 |
| 0/1,500 psi | PFQ2418R1 | PFQ2444R1 | PFQ2213R1 | PFQ2322R1 | PFQ2470R1 | PFQ2496R1 | PFQ2212R1 | PFQ2211R1 |
| 0/2,000 psi | PFQ2419R1 | PFQ2445R1 | PFQ2304R1 | PFQ2323R1 | PFQ2471R1 | PFQ2497R1 | PFQ2279R1 | PFQ2290R1 |
| 0/3,000 psi | PFQ2420R1 | PFQ2446R1 | PFQ2305R1 | PFQ2324R1 | PFQ2472R1 | PFQ2498R1 | PFQ2280R1 | PFQ2291R1 |
| 0/5,000 psi | PFQ2421R1 | PFQ2447R1 | PFQ2258R1 | PFQ2257R1 | PFQ2473R1 | PFQ2499R1 | PFQ2256R1 | PFQ2255R1 |
| 0/6,000 psi | PFQ2422R1 | PFQ2448R1 | PFQ2262R1 | PFQ2261R1 | PFQ2474R1 | PFQ2500R1 | PFQ2260R1 | PFQ2259R1 |
| 0/7,500 psi | PFQ2423R1 | PFQ2449R1 | PFQ2306R1 | PFQ2325R1 | PFQ2475R1 | PFQ2501R1 | PFQ2281R1 | PFQ2292R1 |
| 0/10,000 psi | PFQ2424R1 | PFQ2450R1 | PFQ2307R1 | PFQ2326R1 | PFQ2476R1 | PFQ2502R1 | PFQ2200R1 | PFQ2293R1 |
| 0/15,000 psi | PFQ2425R1 | PFQ2451R1 | PFQ2308R1 | PFQ2327R1 | PFQ2477R1 | PFQ2503R1 | PFQ2210R1 | PFQ2294R1 |

Other ranges and connection sizes available upon request.

# Stainless Steel Liquid Filled Gauge, Lead Free Stainless Steel Liquid Filled Gauge



## Single Scale Order Codes (products in bold are normally stock in North America)

| Dial Size | 2.5" (63mm) | | | |
|---|---|---|---|---|
| Connection | 1/4" Bottom | 1/4" Back (CB) | 1/4" Bottom | 1/4" Back (CB) |
| Movement, Socket, Tube | Brass | | SS | |
| 30" Hg Vac | PFQ801R6 | PFQ900R6 | PFQ106R6 | PFQ147R6 |
| 30"/0/15 psi | PFQ790R1 | PFQ890R1 | PFQ107R1 | PFQ148R1 |
| 30"/0/30 psi | **PFQ798R1** | PFQ898R1 | **PFQ108R1** | PFQ149R1 |
| 30"/0/60 psi | PFQ799R1 | PFQ899R1 | PFQ109R1 | PFQ151R1 |
| 30"/0/100 psi | PFQ791R1 | PFQ891R1 | PFQ110R1 | PFQ156R1 |
| 30"/0/160 psi | PFQ792R1 | PFQ892R1 | PFQ111R1 | PFQ157R1 |
| 30"/0/200 psi | PFQ794R1 | PFQ894R1 | PFQ112R1 | PFQ158R1 |
| 30"/0/300 psi | PFQ795R1 | PFQ895R1 | PFQ113R1 | PFQ159R1 |
| 0/15 psi | **PFQ800R1** | PFQ901R1 | PFQ118R1 | PFQ162R1 |
| 0/30 psi | **PFQ802R1** | PFQ902R1 | PFQ119R1 | PFQ163R1 |
| 0/60 psi | **PFQ803R1** | PFQ903R1 | PFQ120R1 | PFQ164R1 |
| 0/100 psi | PFQ804R1 | PFQ904R1 | **PFQ121R1** | PFQ169R1 |
| 0/160 psi | PFQ805R1 | PFQ905R1 | PFQ122R1 | PFQ170R1 |
| 0/200 psi | PFQ806R1 | PFQ906R1 | PFQ123R1 | PFQ171R1 |
| 0/300 psi | PFQ807R1 | PFQ907R1 | **PFQ124R1** | PFQ175R1 |
| 0/400 psi | PFQ817R1 | PFQ917R1 | PFQ125R1 | PFQ177R1 |
| 0/600 psi | PFQ808R1 | PFQ908R1 | PFQ126R1 | PFQ178R1 |
| 0/1,000 psi | PFQ809R1 | PFQ909R1 | PFQ127R1 | PFQ179R1 |
| 0/1,500 psi | PFQ816R1 | PFQ914R1 | PFQ128R1 | PFQ180R1 |
| 0/2,000 psi | PFQ810R1 | PFQ910R1 | PFQ129R1 | PFQ181R1 |
| 0/3,000 psi | PFQ811R1 | PFQ911R1 | PFQ137R1 | PFQ182R1 |
| 0/4,000 psi | PFQ819R1 | PFQ919R1 | - | - |
| 0/5,000 psi | PFQ812R1 | PFQ912R1 | PFQ138R1 | PFQ183R1 |
| 0/6,000 psi | PFQ814R1 | PFQ915R1 | PFQ139R1 | PFQ184R1 |
| 0/7,500 psi | PFQ818R1 | PFQ918R1 | PFQ144R1 | PFQ186R1 |
| 0/10,000 psi | PFQ813R1 | PFQ913R1 | PFQ145R1 | PFQ190R1 |
| 0/15,000 psi | - | - | PFQ146R1 | PFQ191R1 |

Other ranges and connection sizes available upon request.

# Stainless Steel Liquid Filled Gauge, Lead Free Stainless Steel Liquid Filled Gauge



## Dual Scale Order Codes (products in bold are normally stock in North America)

| Dial Size | 2" (50mm) | | | | | | | |
|---|---|---|---|---|---|---|---|---|
| Connection | 1/8" Bottom | 1/8" Back (CB) | 1/8" Bottom | 1/8" Back (CB) | 1/4" Bottom | 1/4" Back (CB) | 1/4" Bottom | 1/4" Back (CB) |
| Movement, Socket, Tube | Brass | | SS | | Brass | | SS | |
| 30" Hg Vac/kPa | PFQ2400 | **PFQ2426** | PFQ2248 | PFQ2309 | **PFQ2452** | PFQ2478 | PFQ2247 | PFQ2246 |
| 30"/0/15 psi/kPa | PFQ2401 | PFQ2427 | PFQ2295 | PFQ2310 | PFQ2453 | PFQ2479 | PFQ2271 | PFQ2282 |
| 30"/0/30 psi/kPa | PFQ2402 | PFQ2428 | PFQ2241 | PFQ2311 | PFQ2454 | PFQ2480 | PFQ2272 | PFQ2283 |
| 30"/0/60 psi/kPa | PFQ2403 | PFQ2429 | PFQ2296 | PFQ2312 | PFQ2455 | PFQ2481 | PFQ2273 | PFQ2242 |
| 30"/0/100 psi/kPa | PFQ2404 | PFQ2430 | PFQ2297 | PFQ2313 | PFQ2456 | PFQ2482 | PFQ2274 | PFQ2284 |
| 30"/0/150 psi/kPa | PFQ2405 | PFQ2431 | PFQ2298 | PFQ2314 | PFQ2457 | PFQ2483 | PFQ2275 | PFQ2285 |
| 30"/0/200 psi/kPa | PFQ2406 | PFQ2432 | PFQ2299 | PFQ2315 | PFQ2458 | PFQ2484 | PFQ2276 | PFQ2286 |
| 30"/0/300 psi/kPa | PFQ2407 | PFQ2433 | PFQ2300 | PFQ2316 | PFQ2459 | PFQ2485 | PFQ2277 | PFQ2287 |
| 0/15 psi/kPa | PFQ2408 | PFQ2434 | PFQ2218 | PFQ2217 | PFQ2460 | PFQ2486 | PFQ2215 | PFQ2214 |
| 0/30 psi/kPa | PFQ2409 | PFQ2435 | PFQ2253 | PFQ2252 | PFQ2461 | **PFQ2487** | PFQ2250 | PFQ2249 |
| 0/60 psi/kPa | PFQ2410 | **PFQ2436** | PFQ2270 | PFQ2269 | **PFQ2462** | PFQ2488 | PFQ2266 | PFQ2265 |
| 0/100 psi/kPa | **PFQ2411** | **PFQ2437** | PFQ2209 | PFQ2208 | **PFQ2463** | **PFQ2489** | PFQ2205 | PFQ2204 |
| 0/160 psi/kPa | PFQ2412 | **PFQ2438** | PFQ2206 | PFQ2207 | **PFQ2464** | **PFQ2490** | PFQ2220 | PFQ2219 |
| 0/200 psi/kPa | **PFQ2413** | **PFQ2439** | PFQ2301 | PFQ2951 | **PFQ2465** | PFQ2491 | PFQ2267 | PFQ2268 |
| 0/300 psi/kPa | **PFQ2414** | PFQ2440 | PFQ2245 | PFQ2318 | PFQ2466 | **PFQ2492** | PFQ2244 | PFQ2243 |
| 0/400 psi/kPa | PFQ2415 | PFQ2441 | PFQ2302 | PFQ2319 | PFQ2467 | PFQ2493 | PFQ2254 | PFQ2288 |
| 0/600 psi/kPa | PFQ2416 | PFQ2442 | PFQ2264 | PFQ2320 | PFQ2468 | PFQ2494 | PFQ2278 | PFQ2289 |
| 0/1,000 psi/kPa | PFQ2417 | PFQ2443 | PFQ2203 | PFQ2321 | **PFQ2469** | **PFQ2495** | PFQ2202 | **PFQ2201** |
| 0/1,500 psi/kPa | PFQ2418 | PFQ2444 | PFQ2213 | PFQ2322 | PFQ2470 | PFQ2496 | PFQ2212 | PFQ2211 |
| 0/2,000 psi/kPa | PFQ2419 | PFQ2445 | PFQ2304 | PFQ2323 | PFQ2471 | PFQ2497 | PFQ2279 | PFQ2290 |
| 0/3,000 psi/kPa | PFQ2420 | PFQ2446 | PFQ2305 | PFQ2324 | PFQ2472 | PFQ2498 | PFQ2280 | PFQ2291 |
| 0/5,000 psi/kPa | PFQ2421 | PFQ2447 | PFQ2258 | PFQ2257 | **PFQ2473** | PFQ2499 | PFQ2256 | PFQ2255 |
| 0/6,000 psi/kPa | PFQ2422 | PFQ2448 | PFQ2262 | PFQ2261 | PFQ2474 | PFQ2500 | PFQ2260 | PFQ2259 |
| 0/7,500 psi/kPa | PFQ2423 | PFQ2449 | PFQ2306 | PFQ2325 | PFQ2475 | PFQ2501 | PFQ2281 | PFQ2292 |
| 0/10,000 psi/kPa | PFQ2424 | PFQ2450 | PFQ2307 | PFQ2326 | PFQ2476 | PFQ2502 | PFQ2200 | PFQ2293 |
| 0/15,000 psi/kPa | PFQ2425 | PFQ2451 | PFQ2308 | PFQ2327 | PFQ2477 | PFQ2503 | PFQ2210 | PFQ2294 |

## PFQ-LF Order Codes

| Dial Size | 2" (50mm) | | | |
|---|---|---|---|---|
| Connection | 1/8" Bottom | 1/8" Back (CB) | 1/4" Bottom | 1/4" Back (CB) |
| Movement, Socket, Tube | Lead Free Brass | | | |
| 30" Hg Vac/kPa | PFQ2400LF | PFQ2426LF | PFQ2452LF | PFQ2478LF |
| 30"/0/15 psi/kPa | PFQ2401LF | PFQ2427LF | PFQ2453LF | PFQ2479LF |
| 30"/0/30 psi/kPa | PFQ2402LF | PFQ2428LF | PFQ2454LF | PFQ2480LF |
| 30"/0/60 psi/kPa | PFQ2403LF | PFQ2429LF | PFQ2455LF | PFQ2481LF |
| 30"/0/100 psi/kPa | PFQ2404LF | PFQ2430LF | PFQ2456LF | PFQ2482LF |
| 30"/0/160 psi/kPa | PFQ2405LF | PFQ2431LF | PFQ2457LF | PFQ2483LF |
| 30"/0/200 psi/kPa | PFQ2406LF | PFQ2432LF | PFQ2458LF | PFQ2484LF |
| 30"/0/300 psi/kPa | PFQ2407LF | PFQ2433LF | PFQ2459LF | PFQ2485LF |
| 0/15 psi/kPa | PFQ2408LF | PFQ2434LF | **PFQ2460LF** | PFQ2486LF |
| 0/30 psi/kPa | PFQ2409LF | PFQ2435LF | **PFQ2461LF** | PFQ2487LF |
| 0/60 psi/kPa | PFQ2410LF | PFQ2436LF | **PFQ2462LF** | PFQ2488LF |
| 0/100 psi/kPa | PFQ2411LF | PFQ2437LF | **PFQ2463LF** | PFQ2489LF |
| 0/160 psi/kPa | PFQ2412LF | PFQ2438LF | **PFQ2464LF** | PFQ2490LF |
| 0/200 psi/kPa | PFQ2413LF | PFQ2439LF | **PFQ2465LF** | PFQ2491LF |
| 0/300 psi/kPa | PFQ2414LF | PFQ2440LF | PFQ2466LF | PFQ2492LF |
| 0/400 psi/kPa | PFQ2415LF | PFQ2441LF | PFQ2467LF | PFQ2493LF |
| 0/600 psi/kPa | PFQ2416LF | PFQ2442LF | PFQ2468LF | PFQ2494LF |
| 0/1,000 psi/kPa | PFQ2417LF | PFQ2443LF | PFQ2469LF | PFQ2495LF |
| 0/1,500 psi/kPa | PFQ2418LF | PFQ2444LF | PFQ2470LF | PFQ2496LF |
| 0/2,000 psi/kPa | PFQ2419LF | PFQ2445LF | PFQ2471LF | PFQ2497LF |
| 0/3,000 psi/kPa | PFQ2420LF | PFQ2446LF | PFQ2472LF | PFQ2498LF |
| 0/5,000 psi/kPa | PFQ2421LF | PFQ2447LF | PFQ2473LF | PFQ2499LF |
| 0/6,000 psi/kPa | PFQ2422LF | PFQ2448LF | PFQ2474LF | PFQ2500LF |
| 0/7,500 psi/kPa | PFQ2423LF | PFQ2449LF | PFQ2475LF | PFQ2501LF |
| 0/10,000 psi/kPa | PFQ2424LF | PFQ2450LF | PFQ2476LF | PFQ2502LF |
| 0/15,000 psi/kPa | PFQ2425LF | PFQ2451LF | PFQ2477LF | PFQ2503LF |

Other ranges and connection sizes available upon request.

# Stainless Steel Liquid Filled Gauge, Lead Free Stainless Steel Liquid Filled Gauge



## Dual Scale Order Codes (products in bold are normally stock in North America)

| Dial Size | 2.5" (63mm) | | | |
|---|---|---|---|---|
| Connection | 1/4" Bottom | 1/4" Back (CB) | 1/4" Bottom | 1/4" Back (CB) |
| Movement, Socket, Tube | Brass | | SS | |
| 30" Hg Vac/kPa | **PFQ801** | **PFQ900** | **PFQ106** | PFQ147 |
| 30"/0/15 psi/kPa | **PFQ790** | **PFQ890** | PFQ107 | PFQ148 |
| 30"/0/30 psi/kPa | **PFQ798** | **PFQ898** | **PFQ108** | **PFQ149** |
| 30"/0/60 psi/kPa | **PFQ799** | **PFQ899** | **PFQ109** | **PFQ151** |
| 30"/0/100 psi/kPa | **PFQ791** | PFQ891 | **PFQ110** | PFQ156 |
| 30"/0/150 psi/kPa | **PFQ792** | PFQ892 | PFQ111 | PFQ157 |
| 30"/0/200 psi/kPa | **PFQ794** | **PFQ894** | PFQ112 | PFQ158 |
| 30"/0/300 psi/kPa | **PFQ795** | PFQ895 | PFQ113 | PFQ159 |
| 0/15 psi/kPa | **PFQ800** | **PFQ901** | **PFQ118** | PFQ162 |
| 0/30 psi/kPa | **PFQ802** | **PFQ902** | **PFQ119** | PFQ163 |
| 0/60 psi/kPa | **PFQ803** | **PFQ903** | **PFQ120** | **PFQ164** |
| 0/100 psi/kPa | **PFQ804** | **PFQ904** | **PFQ121** | **PFQ169** |
| 0/160 psi/kPa | **PFQ805** | **PFQ905** | **PFQ122** | **PFQ170** |
| 0/200 psi/kPa | **PFQ806** | **PFQ906** | **PFQ123** | **PFQ171** |
| 0/300 psi/kPa | **PFQ807** | **PFQ907** | **PFQ124** | **PFQ175** |
| 0/400 psi/kPa | **PFQ817** | **PFQ917** | **PFQ125** | **PFQ177** |
| 0/600 psi/kPa | **PFQ808** | **PFQ908** | **PFQ126** | **PFQ178** |
| 0/1,000 psi/kPa | **PFQ809** | **PFQ909** | **PFQ127** | **PFQ179** |
| 0/1,500 psi/kPa | **PFQ816** | **PFQ914** | **PFQ128** | PFQ180 |
| 0/2,000 psi/kPa | **PFQ810** | **PFQ910** | **PFQ129** | PFQ181 |
| 0/3,000 psi/kPa | **PFQ811** | **PFQ911** | **PFQ137** | **PFQ182** |
| 0/4,000 psi/kPa | **PFQ819** | PFQ919 | PFQ130 | - |
| 0/5,000 psi/kPa | **PFQ812** | **PFQ912** | **PFQ138** | **PFQ183** |
| 0/6,000 psi/kPa | **PFQ814** | **PFQ915** | PFQ139 | PFQ184 |
| 0/7,500 psi/kPa | PFQ818 | PFQ918 | PFQ144 | PFQ186 |
| 0/10,000 psi/kPa | **PFQ813** | **PFQ913** | **PFQ145** | **PFQ190** |
| 0/15,000 psi/kPa | - | - | PFQ146 | PFQ191 |

| Dial Size | 2.5" (63mm) | |
|---|---|---|
| Connection | 1/4" Bottom | 1/4" Back (CB) |
| Movement, Socket, Tube | Brass | |
| 30" Hg Vac/bar | **PFQ801R1R11** | PFQ900R1R11 |
| 30"/0/15 psi/bar | PFQ790R1R11 | PFQ890R1R11 |
| 30"/0/30 psi/bar | PFQ798R1R11 | PFQ898R1R11 |
| 30"/0/60 psi/bar | PFQ799R1R11 | PFQ899R1R11 |
| 30"/0/100 psi/bar | PFQ791R1R11 | PFQ891R1R11 |
| 30"/0/160 psi/bar | PFQ792R1R11 | PFQ892R1R11 |
| 30"/0/200 psi/bar | PFQ794R1R11 | PFQ894R1R11 |
| 30"/0/300 psi/bar | PFQ795R1R11 | PFQ895R1R11 |
| 0/15 psi/bar | PFQ800R1R11 | PFQ901R1R11 |
| 0/30 psi/bar | PFQ802R1R11 | PFQ902R1R11 |
| 0/60 psi/bar | PFQ803R1R11 | PFQ903R1R11 |
| 0/100 psi/bar | **PFQ804R1R11** | PFQ904R1R11 |
| 0/160 psi/bar | **PFQ805R1R11** | PFQ905R1R11 |
| 0/200 psi/bar | **PFQ806R1R11** | PFQ906R1R11 |
| 0/300 psi/bar | **PFQ807R1R11** | PFQ907R1R11 |
| 0/400 psi/bar | **PFQ817R1R11** | PFQ917R1R11 |
| 0/600 psi/bar | **PFQ808R1R11** | PFQ908R1R11 |
| 0/1,000 psi/bar | **PFQ809R1R11** | PFQ909R1R11 |
| 0/1,500 psi/bar | PFQ816R1R11 | PFQ914R1R11 |
| 0/2,000 psi/bar | PFQ810R1R11 | PFQ910R1R11 |
| 0/3,000 psi/bar | **PFQ811R1R11** | PFQ911R1R11 |
| 0/4,000 psi/bar | PFQ819R1R11 | PFQ919R1R11 |
| 0/5,000 psi/bar | **PFQ812R1R11** | PFQ912R1R11 |
| 0/6,000 psi/bar | **PFQ814R1R11** | PFQ915R1R11 |
| 0/7,500 psi/bar | PFQ818R1R11 | PFQ918R1R11 |
| 0/10,000 psi/bar | PFQ813R1R11 | PFQ913R1R11 |

Other ranges and connection sizes available upon request.

# Stainless Steel Liquid Filled Gauge, Lead Free Stainless Steel Liquid Filled Gauge



## Dual Scale Order Codes (products in bold are normally stock in North America)

| Dial Size | 2.5" (63mm) |
|---|---|
| Connection | 7/16"-20 SAE Bottom |
| Movement, Socket, Tube | Brass |
| 30" Hg Vac/bar | PFQ3643 |
| 30"/0/15 psi/bar | PFQ3644 |
| 30"/0/30 psi/bar | PFQ3645 |
| 30"/0/60 psi/bar | PFQ3646 |
| 30"/0/100 psi/bar | PFQ3647 |
| 30"/0/150 psi/bar | PFQ3648 |
| 30"/0/200 psi/bar | PFQ3649 |
| 30"/0/300 psi/bar | PFQ3650 |
| 0/15 psi/bar | PFQ3651 |
| 0/30 psi/bar | PFQ3652 |
| 0/60 psi/bar | PFQ3653 |
| 0/100 psi/bar | PFQ3654 |
| 0/160 psi/bar | PFQ3655 |
| 0/200 psi/bar | PFQ3656 |
| 0/300 psi/bar | PFQ3657 |
| 0/400 psi/bar | PFQ3658 |
| 0/600 psi/bar | PFQ3659 |
| 0/1,000 psi/bar | PFQ3660 |
| 0/1,500 psi/bar | PFQ3661 |
| 0/2,000 psi/bar | PFQ3662 |
| 0/3,000 psi/bar | **PFQ3663** |
| 0/5,000 psi/bar | **PFQ3664** |
| 0/6,000 psi/bar | PFQ3665 |
| 0/7,500 psi/bar | PFQ3666 |
| 0/10,000 psi/bar | PFQ3667 |
| 0/15,000 psi/bar | PFQ3668 |

## PFQ-LF Order Codes (products in bold are normally stock in North America)

| Dial Size | 2.5" (63mm) | |
|---|---|---|
| Connection | 1/4" Bottom | 1/4" Back (CB) |
| Socket, Tube | Lead Free Brass | |
| 30" Hg Vac/kPa | **PFQ801LF** | PFQ900LF |
| 30"/0/15 psi/kPa | PFQ790LF | PFQ890LF |
| 30"/0/30 psi/kPa | PFQ798LF | PFQ898LF |
| 30"/0/60 psi/kPa | PFQ799LF | PFQ899LF |
| 30"/0/100 psi/kPa | PFQ791LF | PFQ891LF |
| 30"/0/150 psi/kPa | PFQ792LF | PFQ892LF |
| 30"/0/200 psi/kPa | PFQ794LF | PFQ894LF |
| 30"/0/300 psi/kPa | PFQ795LF | PFQ895LF |
| 0/15 psi/kPa | **PFQ800LF** | PFQ901LF |
| 0/30 psi/kPa | **PFQ802LF** | PFQ902LF |
| 0/60 psi/kPa | **PFQ803LF** | PFQ903LF |
| 0/100 psi/kPa | **PFQ804LF** | PFQ904LF |
| 0/160 psi/kPa | **PFQ805LF** | PFQ905LF |
| 0/200 psi/kPa | **PFQ806LF** | PFQ906LF |
| 0/300 psi/kPa | **PFQ807LF** | PFQ907LF |
| 0/400 psi/kPa | PFQ817LF | PFQ917LF |
| 0/600 psi/kPa | PFQ808LF | PFQ908LF |
| 0/1,000 psi/kPa | PFQ809LF | PFQ909LF |
| 0/1,500 psi/kPa | PFQ816LF | PFQ914LF |
| 0/2,000 psi/kPa | PFQ810LF | PFQ910LF |
| 0/3,000 psi/kPa | PFQ811LF | PFQ911LF |
| 0/5,000 psi/kPa | PFQ812LF | PFQ912LF |
| 0/6,000 psi/kPa | PFQ814LF | PFQ915LF |
| 0/7,500 psi/kPa | PFQ818LF | PFQ918LF |
| 0/10,000 psi/kPa | PFQ813LF | PFQ913LF |
| 0/15,000 psi/kPa | - | - |

Other ranges and connection sizes available upon request.

# Stainless Steel Liquid Filled Gauge, Lead Free Stainless Steel Liquid Filled Gauge



## Single Scale Order Codes (products in bold are normally stock in North America)

| Dial Size | 4" (100mm) | | | | | | | |
|---|---|---|---|---|---|---|---|---|
| Connection | 1/4" Bottom | 1/4" Back (CB) | 1/4" Bottom | 1/4" Back (CB) | 1/2" Bottom | 1/2" Back (CB) | 1/2" Bottom | 1/2" Back (CB) |
| Movement, Socket, Tube | Brass | | SS | | Brass | | SS | |
| 30" Hg Vac | PFQ700R6 | PFQ730R6 | PFQ760R6 | PFQ1260R6 | PFQ1234R6 | PFQ1285R6 | PFQ1535R6 | PFQ1559R6 |
| 30"/0/15 psi | PFQ701R1 | PFQ731R1 | PFQ761R1 | PFQ1261R1 | PFQ1235R1 | PFQ1286R1 | PFQ1536R1 | PFQ1560R1 |
| 30"/0/30 psi | PFQ702R1 | PFQ732R1 | PFQ762R1 | PFQ1262R1 | PFQ1236R1 | PFQ1287R1 | PFQ1537R1 | PFQ1561R1 |
| 30"/0/60 psi | PFQ703R1 | PFQ733R1 | PFQ763R1 | PFQ1263R1 | PFQ1237R1 | PFQ1288R1 | PFQ1538R1 | PFQ1562R1 |
| 30"/0/100 psi | PFQ704R1 | PFQ734R1 | PFQ764R1 | PFQ1264R1 | PFQ1238R1 | PFQ1289R1 | PFQ1539R1 | PFQ1563R1 |
| 30"/0/160 psi | PFQ705R1 | PFQ735R1 | PFQ765R1 | PFQ1265R1 | PFQ1239R1 | PFQ1290R1 | PFQ1540R1 | PFQ1564R1 |
| 30"/0/200 psi | PFQ706R1 | PFQ736R1 | PFQ766R1 | PFQ1266R1 | PFQ1240R1 | PFQ1291R1 | PFQ1541R1 | PFQ1565R1 |
| 30"/0/300 psi | PFQ707R1 | PFQ737R1 | PFQ767R1 | PFQ1267R1 | PFQ1241R1 | PFQ1292R1 | PFQ1542R1 | PFQ1566R1 |
| 0/15 psi | PFQ708R1 | PFQ738R1 | PFQ768R1 | PFQ1268R1 | PFQ1242R1 | PFQ1293R1 | PFQ1543R1 | PFQ1567R1 |
| 0/30 psi | PFQ709R1 | PFQ739R1 | PFQ769R1 | PFQ1269R1 | PFQ1243R1 | PFQ1294R1 | PFQ1544R1 | PFQ1568R1 |
| 0/60 psi | **PFQ710R1** | PFQ740R1 | PFQ770R1 | PFQ1270R1 | PFQ1244R1 | PFQ1295R1 | PFQ1545R1 | PFQ1569R1 |
| 0/100 psi | **PFQ711R1** | PFQ741R1 | PFQ771R1 | PFQ1271R1 | PFQ1245R1 | PFQ1296R1 | PFQ1546R1 | PFQ1570R1 |
| 0/160 psi | **PFQ712R1** | PFQ742R1 | PFQ772R1 | PFQ1272R1 | PFQ1246R1 | PFQ1298R1 | PFQ1547R1 | PFQ1571R1 |
| 0/200 psi | PFQ713R1 | PFQ743R1 | PFQ773R1 | PFQ1273R1 | **PFQ1247R1** | PFQ1524R1 | PFQ1548R1 | PFQ1572R1 |
| 0/300 psi | **PFQ714R1** | PFQ744R1 | PFQ774R1 | PFQ1274R1 | PFQ1248R1 | PFQ1525R1 | PFQ1549R1 | PFQ1573R1 |
| 0/400 psi | PFQ715R1 | PFQ745R1 | PFQ775R1 | PFQ1275R1 | PFQ1249R1 | PFQ1526R1 | PFQ1550R1 | PFQ1574R1 |
| 0/600 psi | PFQ716R1 | PFQ746R1 | PFQ776R1 | PFQ1276R1 | PFQ1250R1 | PFQ1527R1 | PFQ1551R1 | PFQ1575R1 |
| 0/1,000 psi | PFQ724R1 | PFQ192R1 | PFQ1528R1 | PFQ1552R1 | PFQ717R1 | PFQ747R1 | PFQ777R1 | PFQ1277R1 |
| 0/1,500 psi | PFQ725R1 | PFQ241R1 | PFQ1529R1 | PFQ1553R1 | PFQ718R1 | PFQ748R1 | PFQ778R1 | PFQ1278R1 |
| 0/2,000 psi | PFQ726R1 | PFQ242R1 | PFQ1530R1 | PFQ1554R1 | PFQ719R1 | PFQ749R1 | **PFQ779R1** | PFQ1279R1 |
| 0/3,000 psi | PFQ727R1 | PFQ243R1 | PFQ1531R1 | PFQ1555R1 | **PFQ720R1** | PFQ750R1 | PFQ780R1 | PFQ1280R1 |
| 0/5,000 psi | PFQ728R1 | PFQ244R1 | PFQ1532R1 | PFQ1556R1 | **PFQ721R1** | PFQ751R1 | PFQ781R1 | PFQ1281R1 |
| 0/6,000 psi | PFQ346R1 | PFQ246R1 | - | - | PFQ784R1 | PFQ785R1 | PFQ789R1 | PFQ1284R1 |
| 0/7,500 psi | PFQ347R1 | PFQ247R1 | - | - | PFQ786R1 | PFQ886R1 | - | - |
| 0/10,000 psi | PFQ729R1 | PFQ360R1 | PFQ1533R1 | PFQ1557R1 | **PFQ722R1** | PFQ752R1 | PFQ782R1 | PFQ1282R1 |
| 0/15,000 psi | PFQ261R1 | PFQ361R1 | PFQ1534R1 | PFQ1558R1 | PFQ723R1 | PFQ753R1 | PFQ783R1 | PFQ1283R1 |

Other ranges and connection sizes available upon request.

# Stainless Steel Liquid Filled Gauge, Lead Free Stainless Steel Liquid Filled Gauge



## Dual Scale Order Codes (products in bold are normally stock in North America)

| Dial Size | 4" (100mm) | | | | | | | |
|---|---|---|---|---|---|---|---|---|
| Connection | 1/4" Bottom | 1/4" Back (CB) | 1/4" Bottom | 1/4" Back (CB) | 1/2" Bottom | 1/2" Back (CB) | 1/2" Bottom | 1/2" Back (CB) |
| Movement, Socket, Tube | Brass | | SS | | Brass | | SS | |
| 30" Hg Vac/kPa | **PFQ700** | PFQ730 | **PFQ760** | PFQ1260 | PFQ1234 | PFQ1285 | PFQ1535 | PFQ1559 |
| 30"/0/15 psi/kPa | **PFQ701** | PFQ731 | PFQ761 | PFQ1261 | PFQ1235 | PFQ1286 | PFQ1536 | PFQ1560 |
| 30"/0/30 psi/kPa | **PFQ702** | PFQ732 | **PFQ762** | PFQ1262 | PFQ1236 | PFQ1287 | PFQ1537 | PFQ1561 |
| 30"/0/60 psi/kPa | **PFQ703** | PFQ733 | PFQ763 | PFQ1263 | PFQ1237 | PFQ1288 | PFQ1538 | PFQ1562 |
| 30"/0/100 psi/kPa | **PFQ704** | PFQ734 | PFQ764 | PFQ1264 | PFQ1238 | PFQ1289 | PFQ1539 | PFQ1563 |
| 30"/0/150 psi/kPa | **PFQ705** | PFQ735 | PFQ765 | PFQ1265 | PFQ1239 | PFQ1290 | PFQ1540 | PFQ1564 |
| 30"/0/200 psi/kPa | **PFQ706** | PFQ736 | PFQ766 | PFQ1266 | PFQ1240 | PFQ1291 | PFQ1541 | PFQ1565 |
| 30"/0/300 psi/kPa | **PFQ707** | PFQ737 | PFQ767 | PFQ1267 | PFQ1241 | PFQ1292 | PFQ1542 | PFQ1566 |
| 0/15 psi/kPa | **PFQ708** | PFQ738 | PFQ768 | PFQ1268 | PFQ1242 | PFQ1293 | PFQ1543 | PFQ1567 |
| 0/30 psi/kPa | **PFQ709** | **PFQ739** | PFQ769 | PFQ1269 | PFQ1243 | PFQ1294 | PFQ1544 | PFQ1568 |
| 0/60 psi/kPa | **PFQ710** | **PFQ740** | **PFQ770** | PFQ1270 | PFQ1244 | PFQ1295 | PFQ1545 | PFQ1569 |
| 0/100 psi/kPa | **PFQ711** | **PFQ741** | **PFQ771** | PFQ1271 | **PFQ1245** | PFQ1296 | **PFQ1546** | PFQ1570 |
| 0/160 psi/kPa | **PFQ712** | **PFQ742** | **PFQ772** | PFQ1272 | **PFQ1246** | PFQ1298 | **PFQ1547** | PFQ1571 |
| 0/200 psi/kPa | **PFQ713** | PFQ743 | **PFQ773** | PFQ1273 | PFQ1247 | PFQ1524 | **PFQ1548** | PFQ1572 |
| 0/300 psi/kPa | **PFQ714** | PFQ744 | **PFQ774** | PFQ1274 | **PFQ1248** | PFQ1525 | **PFQ1549** | PFQ1573 |
| 0/400 psi/kPa | **PFQ715** | PFQ745 | PFQ775 | PFQ1275 | PFQ1249 | PFQ1526 | PFQ1550 | PFQ1574 |
| 0/600 psi/kPa | **PFQ716** | PFQ746 | **PFQ776** | PFQ1276 | **PFQ1250** | PFQ1527 | PFQ1551 | PFQ1575 |
| 0/1,000 psi/kPa | **PFQ724** | PFQ192 | PFQ1528 | PFQ1552 | **PFQ717** | PFQ747 | PFQ777 | PFQ1277 |
| 0/1,500 psi/kPa | PFQ725 | PFQ241 | PFQ1529 | PFQ1553 | PFQ718 | PFQ748 | PFQ778 | PFQ1278 |
| 0/2,000 psi/kPa | PFQ726 | PFQ242 | PFQ1530 | PFQ1554 | **PFQ719** | PFQ749 | PFQ779 | PFQ1279 |
| 0/3,000 psi/kPa | **PFQ727** | PFQ243 | PFQ1531 | **PFQ1555** | **PFQ720** | PFQ750 | PFQ780 | PFQ1280 |
| 0/5,000 psi/kPa | **PFQ728** | PFQ244 | PFQ1532 | PFQ1556 | **PFQ721** | PFQ751 | PFQ781 | PFQ1281 |
| 0/6,000 psi/kPa | PFQ346 | PFQ246 | - | - | PFQ784 | PFQ785 | PFQ789 | PFQ1284 |
| 0/7,500 psi/kPa | PFQ347 | PFQ247 | - | - | - | - | - | - |
| 0/10,000 psi/kPa | **PFQ729** | PFQ360 | PFQ1533 | PFQ1557 | **PFQ722** | PFQ752 | PFQ782 | PFQ1282 |
| 0/15,000 psi/kPa | PFQ261 | PFQ361 | PFQ1534 | PFQ1558 | **PFQ723** | PFQ753 | PFQ783 | PFQ1283 |

Other ranges and connection sizes available upon request.

# Stainless Steel Liquid Filled Gauge, Lead Free Stainless Steel Liquid Filled Gauge



## PFQ-LF Order Codes (products in bold are normally stock in North America)

| Dial Size | 4" (100mm) | | | |
|---|---|---|---|---|
| Connection | 1/4" Bottom | 1/4" Back (CB) | 1/2" Bottom | 1/2" Back (CB) |
| Socket, Tube | Lead Free Brass | | | |
| 30" Hg Vac/kPa | PFQ700LF | PFQ730LF | PFQ1234LF | PFQ1285LF |
| 30"/0/15 psi/kPa | PFQ701LF | PFQ731LF | PFQ1235LF | PFQ1286LF |
| 30"/0/30 psi/kPa | PFQ702LF | PFQ732LF | PFQ1236LF | PFQ1287LF |
| 30"/0/60 psi/kPa | PFQ703LF | PFQ733LF | PFQ1237LF | PFQ1288LF |
| 30"/0/100 psi/kPa | PFQ704LF | PFQ734LF | PFQ1238LF | PFQ1289LF |
| 30"/0/150 psi/kPa | PFQ705LF | PFQ735LF | PFQ1239LF | PFQ1290LF |
| 30"/0/200 psi/kPa | PFQ706LF | PFQ736LF | PFQ1240LF | PFQ1291LF |
| 30"/0/300 psi/kPa | PFQ707LF | PFQ737LF | PFQ1241LF | PFQ1292LF |
| 0/15 psi/kPa | PFQ708LF | PFQ738LF | PFQ1242LF | PFQ1293LF |
| 0/30 psi/kPa | **PFQ709LF** | PFQ739LF | PFQ1243LF | PFQ1294LF |
| 0/60 psi/kPa | **PFQ710LF** | PFQ740LF | PFQ1244LF | PFQ1295LF |
| 0/100 psi/kPa | **PFQ711LF** | PFQ741LF | PFQ1245LF | PFQ1296LF |
| 0/160 psi/kPa | **PFQ712LF** | PFQ742LF | PFQ1246LF | PFQ1298LF |
| 0/200 psi/kPa | **PFQ713LF** | PFQ743LF | PFQ1247LF | PFQ1524LF |
| 0/300 psi/kPa | **PFQ714LF** | PFQ744LF | PFQ1248LF | PFQ1525LF |
| 0/400 psi/kPa | PFQ715LF | PFQ745LF | PFQ1249LF | PFQ1526LF |
| 0/600 psi/kPa | PFQ716LF | PFQ746LF | PFQ1250LF | PFQ1527LF |
| 0/1,000 psi/kPa | PFQ724LF | PFQ192LF | PFQ717LF | PFQ747LF |
| 0/1,500 psi/kPa | PFQ725LF | PFQ241LF | PFQ718LF | PFQ748LF |
| 0/2,000 psi/kPa | PFQ726LF | PFQ242LF | PFQ719LF | PFQ749LF |
| 0/3,000 psi/kPa | PFQ727LF | PFQ243LF | PFQ720LF | PFQ750LF |
| 0/5,000 psi/kPa | PFQ728LF | PFQ244LF | PFQ721LF | PFQ751LF |
| 0/6,000 psi/kPa | PFQ346LF | PFQ246LF | PFQ784LF | PFQ785LF |
| 0/7,500 psi/kPa | PFQ347LF | PFQ247LF | PFQ786LF | PFQ886LF |
| 0/10,000 psi/kPa | PFQ729LF | PFQ360LF | PFQ722LF | PFQ752LF |
| 0/15,000 psi/kPa | PFQ261LF | PFQ361LF | PFQ723LF | PFQ753LF |

Other ranges and connection sizes available upon request.

# Stainless Steel Liquid Filled Gauge, Lead Free Stainless Steel Liquid Filled Gauge



## 1.5” Back Connection with Front Flange and U-Clamp

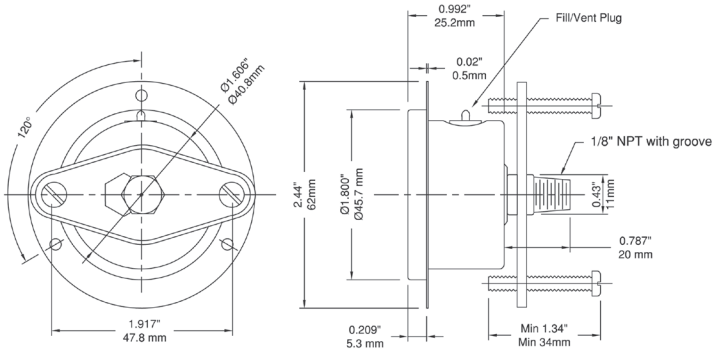


## 2” Bottom Connection

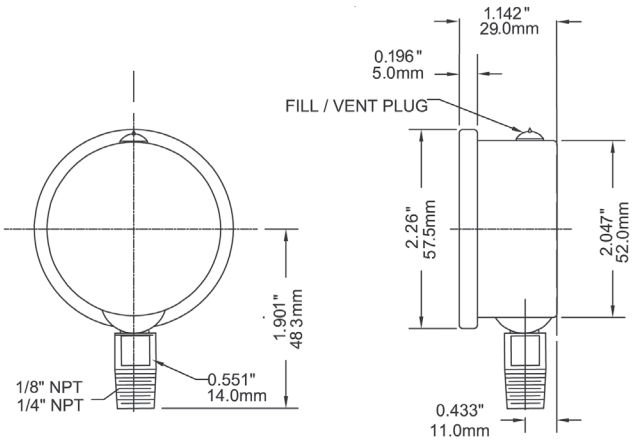


## 2.5” Back Connection with Front Flange

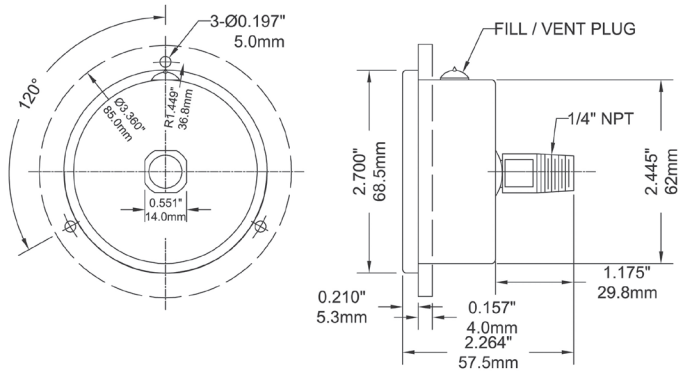


## 2.5” Back Connection with U-Clamp

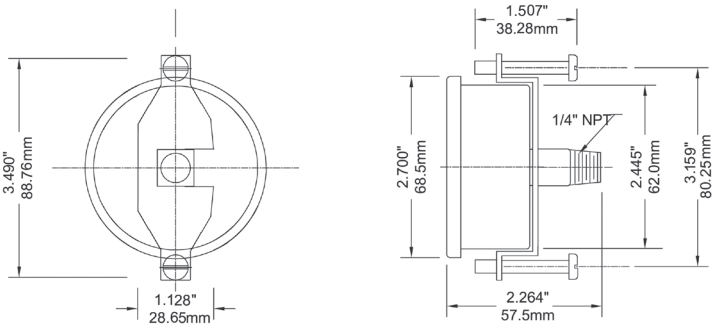


## 2.5” Bottom Connection SAE

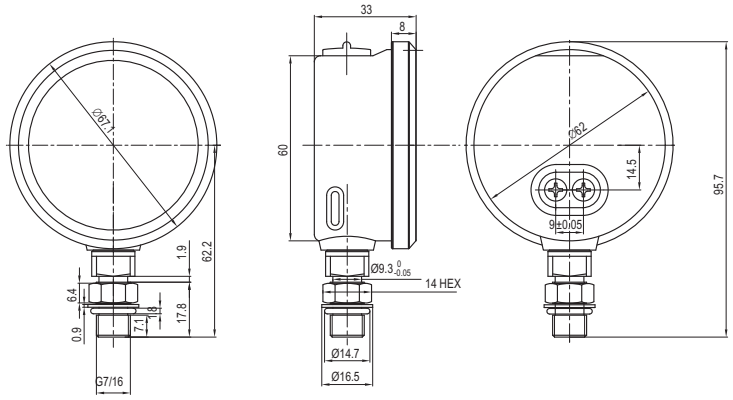


Dimensions in mm

## 4” Back Connection with Front Flange

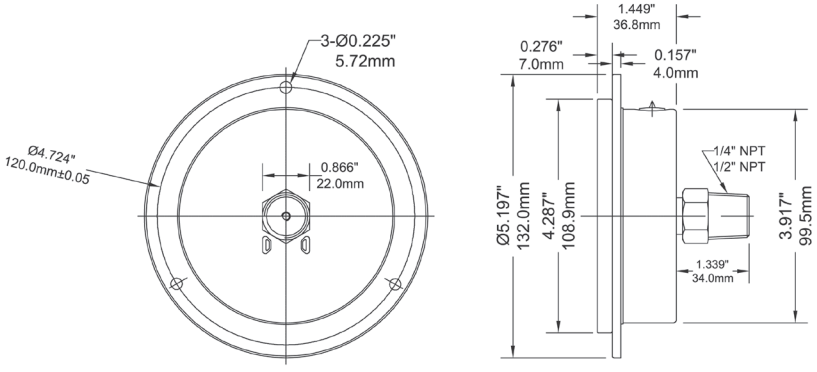

# Stainless Steel Liquid Filled Gauge, Lead Free Stainless Steel Liquid Filled Gauge



## Engineering Codes

| PFQ ENGINEERED PART NUMBER | | P | F | Q | - | | | - | | | | - | | | - | | | - | | | - | | | - | | | | - | | | | |
|---|---|---|---|---|---|---|---|---|---|---|---|---|---|---|---|---|---|---|---|---|---|---|---|---|---|---|---|---|---|---|---|---|
| **DIAL SIZE** | 1.5" (40MM) | | | | | 1 | 5 | | | | | | | | | | | | | | | | | | | | | | | | | |
| | 2.0" (50MM) | | | | | 2 | 0 | | | | | | | | | | | | | | | | | | | | | | | | | |
| | 2.5" (63mm) | | | | | 2 | 5 | | | | | | | | | | | | | | | | | | | | | | | | | |
| | 4" (100mm) | | | | | 4 | 0 | | | | | | | | | | | | | | | | | | | | | | | | | |
| **PRESSURE SCALE & RANGE** | SEE PRESSURE RANGES | | | | | | | # | # | # | | | | | | | | | | | | | | | | | | | | | | |
| **CASE MATERIAL** | 304SS | | | | | | | | | | | S | | | | | | | | | | | | | | | | | | | | |
| | 316SS | | | | | | | | | | | S | S | | | | | | | | | | | | | | | | | | | |
| **WETTED PARTS** | BRASS/BRONZE | | | | | | | | | | | | | | B | R | | | | | | | | | | | | | | | | |
| | 316L | | | | | | | | | | | | | | S | S | | | | | | | | | | | | | | | | |
| **PROCESS CONNECTION SIZE** | 1/4" | | | | | | | | | | | | | | | | N | 4 | | | | | | | | | | | | | | |
| | 3/8" | | | | | | | | | | | | | | | | N | 3 | | | | | | | | | | | | | | |
| | 1/2" | | | | | | | | | | | | | | | | N | 2 | | | | | | | | | | | | | | |
| | 7/16"-20 SAE | | | | | | | | | | | | | | | | S | 7 | | | | | | | | | | | | | | |
| **PROCESS CONNECTION TYPE** | NPT | | | | | | | | | | | | | | | | | | N | | | | | | | | | | | | | |
| | SAE | | | | | | | | | | | | | | | | | | S | | | | | | | | | | | | | |
| | BSPP (G), PARALLEL | | | | | | | | | | | | | | | | | | G | | | | | | | | | | | | | |
| | BSPT (R), TAPERED | | | | | | | | | | | | | | | | | | R | | | | | | | | | | | | | |
| | BSPT (SPIGOT) | | | | | | | | | | | | | | | | | | B | | | | | | | | | | | | | |
| | M14*1.5 | | | | | | | | | | | | | | | | | | M | 4 | | | | | | | | | | | | |
| | M20*1.5 | | | | | | | | | | | | | | | | | | M | 2 | | | | | | | | | | | | |
| **PROCESS CONNECTION LOCATION** | BOTTOM, STEM | | | | | | | | | | | | | | | | | | | | B | | | | | | | | | | | |
| | CENTRE BACK | | | | | | | | | | | | | | | | | | | | C | B | | | | | | | | | | |
| | 12 O'CLOCK | | | | | | | | | | | | | | | | | | | | 1 | 2 | | | | | | | | | | |
| | 3 O'CLOCK | | | | | | | | | | | | | | | | | | | | 3 | | | | | | | | | | | |
| | 6 O'CLOCK | | | | | | | | | | | | | | | | | | | | 6 | | | | | | | | | | | |
| | 9 O'CLOCK | | | | | | | | | | | | | | | | | | | | 9 | | | | | | | | | | | |
| **ACCURACY %** | 1.5 | | | | | | | | | | | | | | | | | | | | | | H | | | | | | | | | |
| | 2.5 | | | | | | | | | | | | | | | | | | | | | | D | | | | | | | | | |
| **OPTIONS, LIST IN ALPHA-NUMERIC ORDER** | GLYCERIN FILL (FOOD GRADE) | | | | | | | | | | | | | | | | | | | | | | | | | | | G | F | | | |
| | GLYCERIN WATER FILL | | | | | | | | | | | | | | | | | | | | | | | | | | | G | W | | | |
| | SILICONE FILL | | | | | | | | | | | | | | | | | | | | | | | | | | | S | F | | | |
| | SILICONE FILL, LOW TEMPERATURE | | | | | | | | | | | | | | | | | | | | | | | | | | | S | T | | | |
| | FLUOROLUBE FILLED | | | | | | | | | | | | | | | | | | | | | | | | | | | F | O | | | |
| | HALOCARBON FILLED | | | | | | | | | | | | | | | | | | | | | | | | | | | H | F | | | |
| | DRY CASE | | | | | | | | | | | | | | | | | | | | | | | | | | | D | R | Y | | |
| | POLYCARBONATE LENS | | | | | | | | | | | | | | | | | | | | | | | | | | | P | L | | | |
| | GLASS LENS | | | | | | | | | | | | | | | | | | | | | | | | | | | G | L | | | |
| | SAFETY GLASS, LAMINATED | | | | | | | | | | | | | | | | | | | | | | | | | | | S | G | | | |
| | SNAP-IN LENS | | | | | | | | | | | | | | | | | | | | | | | | | | | S | I | | | |
| | FRONT FLANGE | | | | | | | | | | | | | | | | | | | | | | | | | | | F | F | | | |
| | BACK FLANGE | | | | | | | | | | | | | | | | | | | | | | | | | | | B | F | | | |
| | U-CLAMP | | | | | | | | | | | | | | | | | | | | | | | | | | | U | C | | | |
| | 316SS POLISHED RING | | | | | | | | | | | | | | | | | | | | | | | | | | | 6 | R | | | |
| | RESTRICTOR SCREW | | | | | | | | | | | | | | | | | | | | | | | | | | | R | S | | | |
| | RESTRICTED ORIFICE | | | | | | | | | | | | | | | | | | | | | | | | | | | R | O | | | |
| | NO RESTRICTOR SCREW / ORIFICE | | | | | | | | | | | | | | | | | | | | | | | | | | | N | R | | | |
| | MOVEMENT 316SS | | | | | | | | | | | | | | | | | | | | | | | | | | | M | S | | | |
| | EN-837 ON-DIAL | | | | | | | | | | | | | | | | | | | | | | | | | | | E | N | | | |
| | ASME B40.100 ON-DIAL | | | | | | | | | | | | | | | | | | | | | | | | | | | A | S | | | |
| | PROTECTIVE RUBBER BOOT | | | | | | | | | | | | | | | | | | | | | | | | | | | P | B | | | |
| | CUSTOM DIAL, SIMPLE | | | | | | | | | | | | | | | | | | | | | | | | | | | C | 1 | | | |
| | CUSTOM DIAL, COMPLEX | | | | | | | | | | | | | | | | | | | | | | | | | | | C | 2 | | | |
| | WINBRIGHT DIAL REFLECTIVE FLUORESCENT YELLOW-GREEN | | | | | | | | | | | | | | | | | | | | | | | | | | | W | B | Y | G | |
| | WINBRIGHT DIAL REFLECTIVE FLUORESCENT YELLOW | | | | | | | | | | | | | | | | | | | | | | | | | | | W | B | Y | | |
| | WINBRIGHT DIAL FLUORESCENT YELLOW | | | | | | | | | | | | | | | | | | | | | | | | | | | W | B | F | Y | |
| | WINBRIGHT DIAL REFLECTIVE ORANGE | | | | | | | | | | | | | | | | | | | | | | | | | | | W | B | O | | |
| | WINBRIGHT DIAL REFLECTIVE WHITE | | | | | | | | | | | | | | | | | | | | | | | | | | | W | B | W | | |
| | WINBRIGHT DIAL GLOW-IN-THE-DARK WHITE | | | | | | | | | | | | | | | | | | | | | | | | | | | W | B | G | | |
| | MAXIMUM ADJUSTABLE POINTER | | | | | | | | | | | | | | | | | | | | | | | | | | | M | A | X | | |
| | MINIMUM ADJUSTABLE POINTER | | | | | | | | | | | | | | | | | | | | | | | | | | | M | I | N | | |
| | RED SET POINTER | | | | | | | | | | | | | | | | | | | | | | | | | | | R | S | P | | |
| | ROSH COMPLIANT | | | | | | | | | | | | | | | | | | | | | | | | | | | R | | | | |
| | LEAD FREE, NSF 61/372 COMPLIANT | | | | | | | | | | | | | | | | | | | | | | | | | | | L | F | | | |
| | UBA CERTIFIED | | | | | | | | | | | | | | | | | | | | | | | | | | | U | B | A | 1 | |
| | NACE COMPLIANT | | | | | | | | | | | | | | | | | | | | | | | | | | | N | | | | |
| | STABILIZR® | | | | | | | | | | | | | | | | | | | | | | | | | | | Z | R | | | |
| | SPECIAL | | | | | | | | | | | | | | | | | | | | | | | | | | | Z | # | # | # | |

# PN2 NACE Liquid Filled Gauge - MR0175-2002




## Description & Features:

- Designed for sour gas applications requiring NACE Standards MR0175-2002 (NACE Standards MR0103-2003 available)
- Glycerin and $H_2O$ filled case
- Blow out back plug
- Under and overload stops
- Wetted parts meet all hardness requirements
- ASME B40.100 compliant (EN837-1 available)
- CRN registered
- 5 year warranty

## Applications:

- Sour gas applications requiring gauges that meet NACE International Standards

| Specifications | |
|---|---|
| **Dial** | 4” (100mm) and 6” (150mm) aluminum with black and red markings |
| **Case** | 304 SS |
| **Lens** | Laminated safety glass |
| **Ring** | 304 SS, bayonet |
| **Socket** | 316L SS |
| **Connection** | 1/4” or 1/2” NPT, bottom or back |
| **Bourdon Tube** | 316L SS |
| **Movement** | 304 SS with under and overload stops |
| **Pointer** | Aluminum, anodized black, micrometer adjustable |
| **Fill Liquid** | Glycerin/$H_2O$ |
| **Over-pressure Limit** | 25% for pressures up to 1,450 psi (9,998 kPa),<br>15% for pressures over 1,450 psi (9,998 kPa) |
| **Ambient/Process Temperature** | Dry: -40°F to 250°F (-40°C to 120°C)<br>Glycerin Water: -40°F to 150°F (-40°C to 65°C) |
| **Accuracy** | ±1% ANSI/ASME Grade 1A |
| **Enclosure Rating** | IP66 |

# PN2 NACE Liquid Filled Gauge - MR0175-2002

## Order Codes (products in bold are normally stock in North America)

| Dial Size | 4” (100mm) | | | | 6” (150mm) | |
|---|---|---|---|---|---|---|
| Connection | 1/4” Bottom | 1/4” Back (LB) | 1/2” Bottom | 1/2” Back (LB) | 1/2” Bottom | 1/2” Back (LB) |
| 30” Hg Vac/kPa | PN2640N | PN21090N | PN2655N | - | PN21100N | - |
| 30”/0/15 psi/kPa | PN21036N | - | PN21044N | - | PN21101N | - |
| 30”/0/30 psi/kPa | PN21037N | - | PN21045N | - | PN21102N | - |
| 30”/0/60 psi/kPa | PN21038N | - | PN21046N | - | PN21103N | - |
| 30”/0/100 psi/kPa | PN21039N | - | PN21047N | - | PN21104N | - |
| 30”/0/150 psi/kPa | PN21040N | - | PN21048N | - | PN21105N | - |
| 30”/0/200 psi/kPa | PN21042N | - | PN21050N | - | PN21106N | - |
| 30”/0/300 psi/kPa | PN21043N | - | PN21051N | - | PN21107N | - |
| 0/15 psi/kPa | PN2641N | PN21091N | PN2656N | - | PN21108N | - |
| 0/30 psi/kPa | PN2642N | PN21092N | PN2657N | - | PN21109N | - |
| 0/60 psi/kPa | PN2643N | PN21093N | PN2658N | - | PN21110N | - |
| 0/100 psi/kPa | PN2644N | PN21094N | **PN2659N** | - | PN21111N | - |
| 0/160 psi/kPa | PN2645N | PN21095N | **PN2660N** | - | PN21112N | - |
| 0/200 psi/kPa | PN2646N | PN21096N | **PN2661N** | - | PN21113N | - |
| 0/300 psi/kPa | PN2647N | PN21097N | **PN2662N** | - | PN21114N | - |
| 0/400 psi/kPa | PN2650N | PN2150N | **PN2666N** | - | PN21115N | - |
| 0/600 psi/kPa | PN2648N | PN21098N | **PN2663N** | - | PN21116N | - |
| 0/1,000 psi/kPa | PN2649N | PN21099N | **PN2664N** | - | PN21117N | PN21217N |
| 0/1,500 psi/kPa | - | - | **PN2665N** | PN21190N | PN21118N | PN21218N |
| 0/2,000 psi/kPa | - | - | **PN2667N** | PN21191N | PN21119N | PN21219N |
| 0/3,000 psi/kPa | - | - | **PN2668N** | PN21192N | PN21120N | PN21220N |
| 0/4,000 psi/kPa | - | - | PN2701N | PN2702N | PN21121N | PN21221N |
| 0/5,000 psi/kPa | - | - | **PN2669N** | PN21193N | PN21122N | PN21222N |
| 0/6,000 psi/kPa | - | - | PN2675N | PN2175N | PN21123N | PN21223N |
| 0/10,000 psi/kPa | - | - | **PN2670N** | PN21194N | PN21124N | PN21224N |
| 0/15,000 psi/kPa | - | - | PN2671N | PN21195N | PN21125N | PN21225N |
| 0/20,000 psi/kPa | - | - | PN2672N | PN21196N | PN21126N | PN21226N |

Other ranges and connection sizes available upon request.

### 4” Bottom Connection

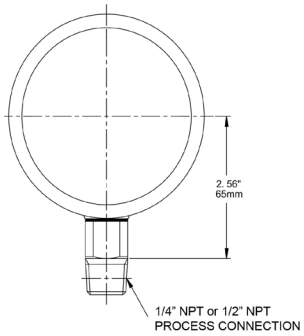


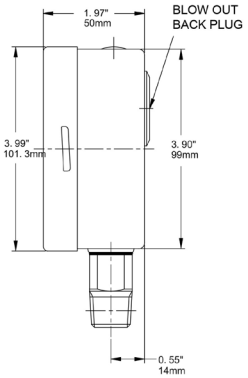


### 4” Back Connection

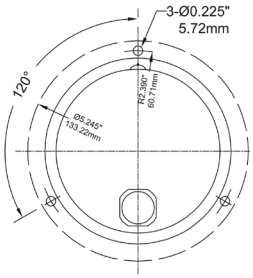


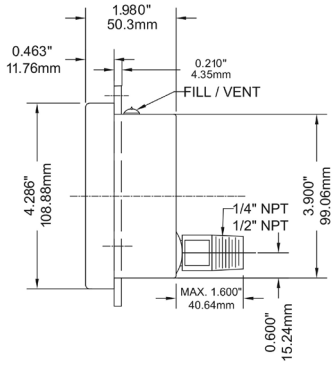


### 6” Bottom Connection

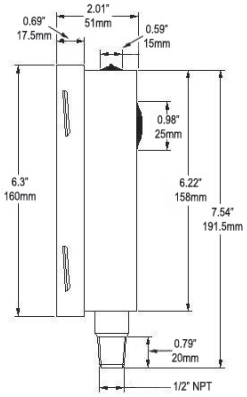

# PN2 NACE Liquid Filled Gauge - MR0175-2002

## Engineering Codes

| N2 ENGINEERED PART NUMBER | | P N 2 - | | | - | | | | - | | | - | | - | | - | | - | | | | |
|---|---|---|---|---|---|---|---|---|---|---|---|---|---|---|---|---|---|---|---|---|---|---|
| IAL SIZE | 2.5" (63mm) | | 2 | 5 | | | | | | | | | | | | | | | | | | |
| | 4" (100mm) | | 4 | 0 | | | | | | | | | | | | | | | | | | |
| | 6" (160mm) | | 6 | 0 | | | | | | | | | | | | | | | | | | |
| RESSURE SCALE & RANGE | SEE PRESSURE RANGES | | | | | # | # | # | | | | | | | | | | | | | | |
| ASE MATERIAL | 304SS | | | | | | | | | S | | | | | | | | | | | | |
| | 316SS | | | | | | | | | S | S | | | | | | | | | | | |
| | 316L | | | | | | | | | S | L | | | | | | | | | | | |
| ETTED PARTS | 316L | | | | | | | | | | | S | L | | | | | | | | | |
| ROCESS CONNECTION SIZE | 1/4" | | | | | | | | | | | | | N | 4 | | | | | | | |
| | 1/2" | | | | | | | | | | | | | N | 2 | | | | | | | |
| ROCESS CONNECTION TYPE | NPT | | | | | | | | | | | | | | | N | | | | | | |
| | BSPP (G), PARALLEL | | | | | | | | | | | | | | | G | | | | | | |
| | BSPT (R), TAPERED | | | | | | | | | | | | | | | R | | | | | | |
| ROCESS CONNECTION LOCATION | BOTTOM, STEM | | | | | | | | | | | | | | | | B | | | | | |
| | LOWER BACK | | | | | | | | | | | | | | | | L | B | | | | |
| CCURACY % | 1.0 | | | | | | | | | | | | | | | | | | I | | | |
| PTIONS, LIST IN ALPHA-NUMERIC ORDER | GLYCERIN FILL (FOOD GRADE) | | | | | | | | | | | | | | | | | | | G | F | |
| | GLYCERIN WATER FILL | | | | | | | | | | | | | | | | | | | G | W | |
| | SILICONE FILL | | | | | | | | | | | | | | | | | | | S | F | |
| | SILICONE FILL, LOW TEMPERATURE | | | | | | | | | | | | | | | | | | | S | T | |
| | FLUOROLUBE FILLED | | | | | | | | | | | | | | | | | | | F | O | |
| | HALOCARBON FILLED | | | | | | | | | | | | | | | | | | | H | F | |
| | DRY CASE | | | | | | | | | | | | | | | | | | | D | R | Y |
| | POLYCARBONATE LENS | | | | | | | | | | | | | | | | | | | P | L | |
| | GLASS LENS | | | | | | | | | | | | | | | | | | | G | L | |
| | SAFETY GLASS, LAMINATED | | | | | | | | | | | | | | | | | | | S | G | |
| | FRONT FLANGE | | | | | | | | | | | | | | | | | | | F | F | |
| | BACK FLANGE | | | | | | | | | | | | | | | | | | | B | F | |
| | U-CLAMP | | | | | | | | | | | | | | | | | | | U | C | |
| | BLOW-OUT DISK | | | | | | | | | | | | | | | | | | | B | D | |
| | 316SS POLISHED RING | | | | | | | | | | | | | | | | | | | 6 | R | |
| | 316L POLISHED RING | | | | | | | | | | | | | | | | | | | L | R | |
| | RESTRICTOR SCREW | | | | | | | | | | | | | | | | | | | R | S | |
| | NO RESTRICTOR SCREW / ORIFICE | | | | | | | | | | | | | | | | | | | N | R | |
| | MOVEMENT 316SS | | | | | | | | | | | | | | | | | | | M | S | |
| | MOVEMENT 316L | | | | | | | | | | | | | | | | | | | M | L | |
| | EN-837 ON-DIAL | | | | | | | | | | | | | | | | | | | E | N | |
| | ASME B40.100 ON-DIAL | | | | | | | | | | | | | | | | | | | A | S | |
| | CUSTOM DIAL, SIMPLE | | | | | | | | | | | | | | | | | | | C | 1 | |
| | CUSTOM DIAL, COMPLEX | | | | | | | | | | | | | | | | | | | C | 2 | |
| | WINBRIGHT DIAL REFLECTIVE FLUORESCENT YELLOW-GREEN | | | | | | | | | | | | | | | | | | | W | B | Y G |
| | WINBRIGHT DIAL REFLECTIVE FLUORESCENT YELLOW | | | | | | | | | | | | | | | | | | | W | B | Y |
| | WINBRIGHT DIAL FLUORESCENT YELLOW | | | | | | | | | | | | | | | | | | | W | B | F Y |
| | WINBRIGHT DIAL REFLECTIVE ORANGE | | | | | | | | | | | | | | | | | | | W | B | O |
| | WINBRIGHT DIAL REFLECTIVE WHITE | | | | | | | | | | | | | | | | | | | W | B | W |
| | WINBRIGHT DIAL GLOW-IN-THE-DARK WHITE | | | | | | | | | | | | | | | | | | | W | B | G |
| | MAXIMUM ADJUSTABLE POINTER | | | | | | | | | | | | | | | | | | | M | A | X |
| | MINIMUM ADJUSTABLE POINTER | | | | | | | | | | | | | | | | | | | M | I | N |
| | RED SET POINTER | | | | | | | | | | | | | | | | | | | R | S | P |
| | STABILIZR® | | | | | | | | | | | | | | | | | | | Z | R | |
| | SPECIAL | | | | | | | | | | | | | | | | | | | Z | # | # # |

# PSC | Safety Case Gauge




## Description & Features:

- Solid front blowout back for the ultimate in gauge safety
- Full rotary movement and micrometer pointer for ease in calibration
- Overload stop
- Stainless steel case, socket and internals
- Safety glass lens
- Restricted orifice standard
- ASME B40.100 compliant (EN837-1 available)
- CRN registered
- 5 year warranty

## Applications:

- Used where operator safety is a must
- Outdoor and severe ambient and process conditions
- Use where harmful vibration and pulsation are present (with liquid filling)
- Oil and gas, petrochemical, mining and power installations

| Specifications | |
|---|---|
| **Dial** | 4” (100mm), 4.5” (115mm), 6” (150mm), white aluminum with black and red markings |
| **Case** | 304 SS case with blowout back |
| **Lens** | 4” (100mm), 6” (150mm): Laminated safety glass<br>4.5” (115mm): Tempered safety glass |
| **Ring** | SS bayonet |
| **Socket** | 316L SS |
| **Connection** | 1/4” or 1/2” NPT bottom |
| **Bourdon Tube** | 316L SS |
| **Movement** | 304 SS overload stop |
| **Pointer** | Aluminum, anodized black, micrometer adjustable |
| **Over-pressure Limit** | 25% for pressures up to 1,450 psi (9,998 kPa),<br>15% for pressures over 1,450 psi (9,998 kPa) |
| **Working Pressure** | Maximum 75% of full scale value |
| **Ambient Temperature** | Dry: -40°F to 250°F (-40°C to 120°C)<br>Glycerin Filled: -4°F to 150°F (-20°C to 65°C) |
| **Process Temperature** | -40°F to 250°F (-40°C to 120°C) |
| **Accuracy** | 4” (100mm), 6” (150mm): ±1% ANSI/ASME Grade 1A<br>4.5” (115mm): ±0.5% ANSI/ASME Grade 2A |
| **Enclosure Rating** | 4” (100mm), 6” (150mm): IP67 per EN60529-1 (IEC529-1)<br>4.5” (115mm): IP65 per EN60529-1 (IEC529-1) |

## Order Codes

| Dial Size | 4" (100mm) | | 4.5" (115mm) | | 6" (150mm) | |
|---|---|---|---|---|---|---|
| Connection | 1/4" Bottom | 1/2" Bottom | 1/4" Bottom | 1/2" Bottom | 1/4" Bottom | 1/2" Bottom |
| 30" Hg Vac/kPa | PSC248 | PSC4870 | PSC281 | PSC4888 | PSC283 | PSC4906 |
| 30"/0/15 psi/kPa | PSC249 | PSC4871 | PSC282 | PSC4889 | PSC284 | PSC4907 |
| 30"/0/30 psi/kPa | PSC257 | PSC4872 | PSC358 | PSC4890 | PSC285 | PSC4908 |
| 30"/0/60 psi/kPa | PSC258 | PSC4873 | PSC359 | PSC4891 | PSC286 | PSC4909 |
| 30"/0/100 psi/kPa | PSC259 | PSC4874 | PSC362 | PSC4892 | PSC287 | PSC4910 |
| 30"/0/150 psi/kPa | PSC260 | PSC4875 | PSC363 | PSC4893 | PSC289 | PSC4911 |
| 30"/0/200 psi/kPa | PSC261 | PSC4876 | PSC364 | PSC4894 | PSC296 | PSC4912 |
| 30"/0/300 psi/kPa | PSC262 | PSC4877 | PSC365 | PSC4895 | PSC297 | PSC4913 |
| 0/15 psi/kPa | PSC263 | PSC4878 | PSC366 | PSC4896 | PSC298 | PSC4914 |
| 0/30 psi/kPa | PSC264 | PSC4879 | PSC367 | PSC4897 | PSC299 | PSC4915 |
| 0/60 psi/kPa | PSC265 | PSC4880 | PSC368 | PSC4898 | PSC307 | PSC4916 |
| 0/100 psi/kPa | PSC266 | PSC4881 | PSC369 | PSC4899 | PSC308 | PSC4917 |
| 0/160 psi/kPa | PSC267 | PSC4882 | PSC370 | PSC4900 | PSC309 | PSC4918 |
| 0/200 psi/kPa | PSC268 | PSC4883 | PSC371 | PSC4901 | PSC317 | PSC4919 |
| 0/300 psi/kPa | PSC269 | PSC4884 | PSC372 | PSC4902 | PSC318 | PSC4920 |
| 0/400 psi/kPa | PSC272 | PSC4885 | PSC373 | PSC4903 | PSC335 | PSC4921 |
| 0/600 psi/kPa | PSC273 | PSC4886 | PSC374 | PSC4904 | PSC336 | PSC4922 |
| 0/1,000 psi/kPa | - | PSC274 | - | PSC375 | - | PSC337 |
| 0/1,500 psi/kPa | - | PSC275 | - | PSC376 | - | PSC338 |
| 0/2,000 psi/kPa | - | PSC276 | - | PSC377 | - | PSC339 |
| 0/3,000 psi/kPa | - | PSC277 | - | PSC378 | - | PSC347 |
| 0/5,000 psi/kPa | - | PSC278 | - | PSC379 | - | PSC348 |
| 0/10,000 psi/kPa | - | PSC498 | - | PSC380 | - | PSC502 |
| 0/15,000 psi/kPa | - | PSC499 | - | PSC381 | - | PSC504 |
| 0/20,000 psi/kPa | - | PSC4887 | - | PSC4905 | - | PSC4923 |

Other ranges and connection sizes available upon request.

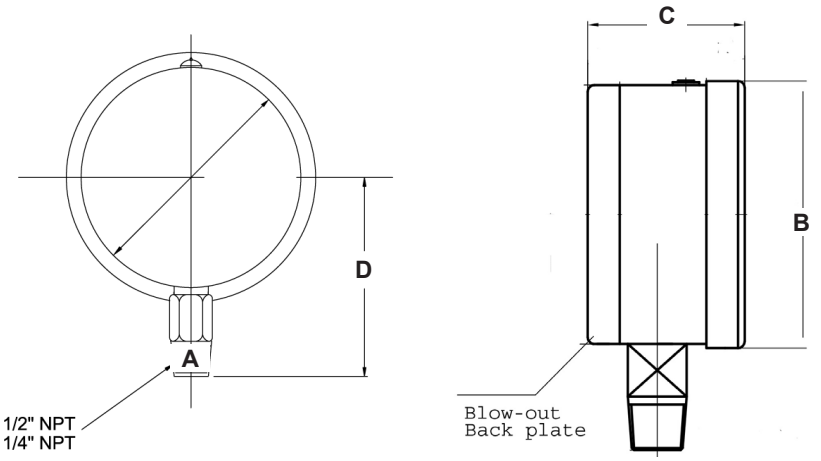


| Dial | A | B | C | D |
|---|---|---|---|---|
| 4" (100mm) | 4.1" (105mm) | 4.67" (119mm) | 2.44" (57mm) | 3.80" (96.5mm) |
| 4.5" (115mm) | 4.38" (111.3mm) | 5.04" (128mm) | 2.38" (60.5mm) | 4.173" (106mm) |
| 6" (150mm) | 5.69" (144.6mm) | 6.34" (161mm) | 2.74" (69.5mm) | 4.843" (123mm) |

# PSC Safety Case Gauge

## Engineering Codes

| PSC ENGINEERED PART NUMBER | | P S C - □□ - □□□ - □□ - □□ - □□ - □ - □ - □ - □□□□ |
|---|---|---|
| **DIAL SIZE** | 4" (100mm) | 4 0 |
| | 4.5" (115mm) | 4 5 |
| | 6" (160mm) | 6 0 |
| **PRESSURE SCALE & RANGE** | SEE PRESSURE RANGES | # # # |
| **CASE MATERIAL** | 304SS | S |
| | 316SS | S S |
| | 316L | S L |
| **WETTED PARTS** | 316L | S L |
| | MONEL | M |
| **PROCESS CONNECTION SIZE** | 1/4" | N 4 |
| | 3/8" | N 3 |
| | 1/2" | N 2 |
| | 3/4" | N 5 |
| **PROCESS CONNECTION TYPE** | NPT | N |
| | BSPP (G), PARALLEL | G |
| | BSPT (R), TAPERED | R |
| **PROCESS CONNECTION LOCATION** | BOTTOM, STEM | B |
| **ACCURACY %** | 0.5 | K |
| | 1.0 | I |
| **OPTIONS, LIST IN ALPHA-NUMERIC ORDER** | GLYCERIN FILL (FOOD GRADE) | G F |
| | GLYCERIN WATER FILL | G W |
| | SILICONE FILL | S F |
| | SILICONE FILL, LOW TEMPERATURE | S T |
| | FLUOROLUBE FILLED | F O |
| | HALOCARBON FILLED | H F |
| | DRY CASE | D R Y |
| | SAFETY GLASS, LAMINATED | S G |
| | SAFETY GLASS, TEMPERED | T G |
| | 316SS POLISHED RING | 6 R |
| | 316L POLISHED RING | L R |
| | RESTRICTOR SCREW | R S |
| | NO RESTRICTOR SCREW / ORIFICE | N R |
| | MOVEMENT 316SS | M S |
| | MOVEMENT 316L | M L |
| | EN-837 ON-DIAL | E N |
| | ASME B40.100 ON-DIAL | A S |
| | CUSTOM DIAL, SIMPLE | C 1 |
| | CUSTOM DIAL, COMPLEX | C 2 |
| | WINBRIGHT DIAL REFLECTIVE FLUORESCENT YELLOW-GREEN | W B Y G |
| | WINBRIGHT DIAL REFLECTIVE FLUORESCENT YELLOW | W B Y |
| | WINBRIGHT DIAL FLUORESCENT YELLOW | W B F Y |
| | WINBRIGHT DIAL REFLECTIVE ORANGE | W B O |
| | WINBRIGHT DIAL REFLECTIVE WHITE | W B W |
| | WINBRIGHT DIAL GLOW-IN-THE-DARK WHITE | W B G |
| | MAXIMUM ADJUSTABLE POINTER | M A X |
| | MINIMUM ADJUSTABLE POINTER | M I N |
| | RED SET POINTER | R S P |
| | NACE COMPLIANT | N |
| | STABILIZR® | Z R |
| | SPECIAL | Z # # # |

# PTG | Test Gauge

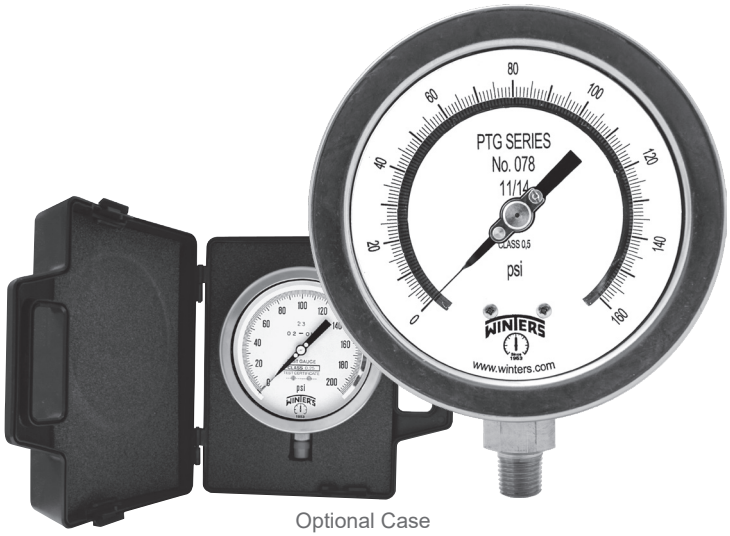

Optional Case

## Description & Features:

- Highly accurate ±0.5% complete with calibration certificate traceable to NIST standards
- Mirrored anti-parallax dial
- Knife-edge pointer
- Protective carrying and storage case available
- ASME B40.100 compliant
- CRN registered
- 5 year warranty

## Applications:

- Designed to be used where accuracy and repeatability are of prime importance
- Used in laboratories and instrument testing facilities

| Specifications | |
|---|---|
| **Dial** | White aluminum with black markings and mirror band for precise instrument readings |
| **Case** | AISI 304 SS |
| **Lens** | 4” (100mm): Polycarbonate<br>6” (150mm): Glass |
| **Ring** | AISI 304 SS |
| **Socket** | Brass or Stainless Steel |
| **Connection** | 1/4” NPT or 1/2” NPT standard, bottom |
| **Bourdon Tube** | Phosphor bronze or Stainless Steel |
| **Movement** | Brass or Stainless Steel |
| **Pointer** | Aluminum, anodized black, micrometer adjustable, knife-edge |
| **Welding** | Silver alloy |
| **Over-pressure Limit** | 30% of full scale value |
| **Working Pressure** | Maximum 75% of full scale value |
| **Calibration Conditions** | 68°F (±5.4°F), 20°C (±3°C) for ambient and process temperatures at atmospheric pressure |
| **Ambient/Process Temperature** | -4°F to 150°F (-20°C to 65°C) |
| **Accuracy** | 6” - ±0.25% ANSI/ASME Grade 3A<br>4” - ±0.5% ANSI/ASME Grade 2A |
| **Enclosure Rating** | IP65 |
| **Warning (brass internals only)** | **WARNING:** This product can expose you to chemicals including lead, which is known to the State of California to cause cancer and birth defects or other reproductive harm. For more information go to www.P65Warnings.ca.gov. |

## Order Codes

| Dial Size | 4” (100mm) | | 6” (150mm) | | 6” (150mm) | |
|---|---|---|---|---|---|---|
| Connection | 1/4” Bottom | 1/2” Bottom | 1/4” Bottom | 1/2” Bottom | 1/2” Bottom | 1/2” Bottom |
| Movement, Socket, Tube | Brass | | Brass | | Stainless Steel | |
| 30” Hg Vac | PTG3999 | - | PTG6999 | PTG6055 | PTG6199 | PTG6599 |
| 0/15 psi | PTG4000 | - | PTG6000 | PTG6056 | PTG6100 | PTG6500 |
| 0/30 psi | PTG4001 | - | PTG6001 | PTG6057 | PTG6101 | PTG6501 |
| 0/60 psi | PTG4002 | - | PTG6002 | PTG6058 | PTG6102 | PTG6502 |
| 0/100 psi | PTG4003 | - | PTG6003 | PTG6059 | PTG6103 | PTG6503 |
| 0/160 psi | PTG4004 | - | PTG6004 | PTG6060 | PTG6104 | PTG6504 |
| 0/200 psi | PTG4005 | - | PTG6005 | PTG6061 | PTG6105 | PTG6505 |
| 0/300 psi | PTG4006 | - | PTG6006 | PTG6062 | PTG6106 | PTG6506 |
| 0/400 psi | PTG4007 | - | PTG6007 | PTG6063 | PTG6107 | PTG6507 |
| 0/600 psi | PTG4008 | - | PTG6008 | PTG6064 | PTG6108 | PTG6508 |
| 0/1,000 psi | - | PTG4009 | PTG6016 | PTG6009 | PTG6116 | PTG6516 |
| 0/1,500 psi | - | PTG4010 | PTG6017 | PTG6010 | PTG6117 | PTG6517 |
| 0/2,000 psi | - | PTG4011 | PTG6018 | PTG6011 | PTG6118 | PTG6518 |
| 0/3,000 psi | - | PTG4012 | PTG6019 | PTG6012 | PTG6119 | PTG6519 |
| 0/5,000 psi | - | PTG4013 | PTG6053 | PTG6013 | PTG6153 | PTG6553 |
| 0/10,000 psi | - | PTG4014 | PTG6054 | PTG6014 | PTG6154 | PTG6554 |

Other ranges and connection sizes available upon request. For scale change, refer to How to Order Guide for scale codes.
**For options, attach suffix to end of order code: i.e. PTG2006-6BF for BACK FLANGE**

**Option suffix:**

4BF = 4” (100mm) Back flange
4FF = 4” (100mm) Front flange
6BF = 6” (150mm) Back flange
6FF = 6” (150mm) Front flange
6FF = 6” (150mm) Front flange
TG4 = 4” (100mm) Test gauge case
TG6 = 6” (150mm) Test gauge case

### 4” Bottom Connection with Back Flange

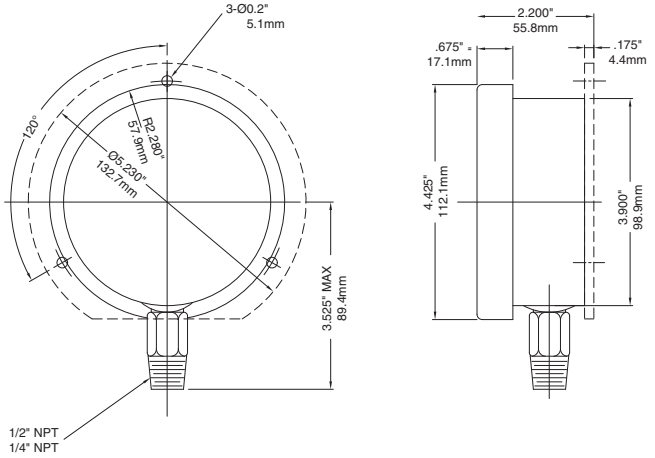


### 6” Bottom Connection

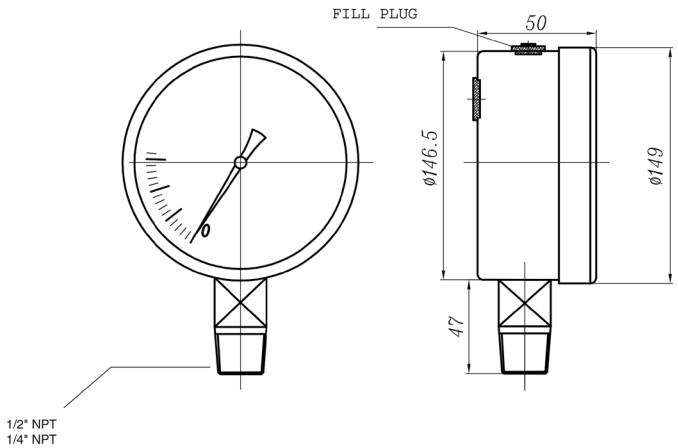

# PTS Tube Stub Gauge




## Description & Features:

- Gauge designed to be used with most standard double ferrule tube fittings, such as Parker A-Lok®
- Heavy duty, stainless steel, liquid-filled gauge
- Back, bottom, or panel mount configurations
- ±1.5% accuracy
- Facilitates 360° orientation
- Elimination of leak point
- PTFE free connection
- ASME B40.100 compliant
- CRN registered
- 5 year warranty

## Applications:

- Specifically designed to be utilized with tube fitting applications in the fluid power sector
- Allows installation where space is limited
- Used where PTFE free connection is needed
- Used where gauge alignment is critical

| Specifications | |
|---|---|
| **Dial** | 2.5” (63mm) aluminum with red and black markings |
| **Case** | Grade 304 SS |
| **Lens** | Polycarbonate |
| **Ring** | 304 SS, bayonet |
| **Block** | 316L SS |
| **Socket** | 316L SS |
| **Connection** | 1/4” Tube Stub |
| **Bourdon Tube** | 316L SS |
| **Movement** | 304 SS |
| **Pointer** | Aluminum, anodized black |
| **Welding** | Laser welded socket to case |
| **Fill Liquid** | Glycerin |
| **Over-pressure Limit** | 15% of full scale value |
| **Gasket Materials** | Buna N |
| **Working Pressure** | 75% of full scale value |
| **Ambient/Process Temperature** | Dry: -40°F to 200°F (-40°C to 93°C)<br>Glycerin Filled: -4°F to 150°F (-20°C to 65°C) |
| **Accuracy** | ±1.5% of full scale value |
| **Enclosure Rating** | IP66 per EN60529-1 (IEC529-1) |

A-Lok® is a registered trademark of Parker Hannifin Corporation

## Single Scale Order Codes

| Dial Size | 2.5" (63mm) | |
|---|---|---|
| Connection | 1/4" Tube Bottom | 1/4" Tube Back (CB) |
| 30" Hg Vac | PTS820R6-TS | PTS840R6-TS |
| 30"/0/15 psi | PTS860R1-TS | PTS870R1-TS |
| 30"/0/30 psi | PTS861R1-TS | PTS871R1-TS |
| 30"/0/60 psi | PTS862R1-TS | PTS872R1-TS |
| 30"/0/100 psi | PTS863R1-TS | PTS873R1-TS |
| 30"/0/150 psi | PTS864R1-TS | PTS874R1-TS |
| 30"/0/200 psi | PTS866R1-TS | PTS876R1-TS |
| 30"/0/300 psi | PTS867R1-TS | PTS877R1-TS |
| 0/15 psi | PTS821R1-TS | PTS921R1-TS |
| 0/30 psi | PTS822R1-TS | PTS922R1-TS |
| 0/60 psi | PTS823R1-TS | PTS923R1-TS |
| 0/100 psi | PTS824R1-TS | PTS924R1-TS |
| 0/160 psi | PTS825R1-TS | PTS925R1-TS |
| 0/200 psi | PTS826R1-TS | PTS926R1-TS |
| 0/300 psi | PTS827R1-TS | PTS927R1-TS |
| 0/400 psi | PTS880R1-TS | PTS881R1-TS |
| 0/600 psi | PTS828R1-TS | PTS928R1-TS |
| 0/1,000 psi | PTS829R1-TS | PTS929R1-TS |
| 0/1,500 psi | PTS835R1-TS | PTS935R1-TS |
| 0/2,000 psi | PTS836R1-TS | PTS936R1-TS |
| 0/3,000 psi | PTS831R1-TS | PTS931R1-TS |
| 0/5,000 psi | PTS832R1-TS | PTS852R1-TS |

## Dual Scale Order Codes

| Dial Size | 2.5" (63mm) | |
|---|---|---|
| Connection | 1/4" Tube Bottom | 1/4" Tube Back (CB) |
| 30" Hg Vac/kPa | PTS820-TS | PTS840-TS |
| 30"/0/15 psi/kPa | PTS860-TS | PTS870-TS |
| 30"/0/30 psi/kPa | PTS861-TS | PTS871-TS |
| 30"/0/60 psi/kPa | PTS862-TS | PTS872-TS |
| 30"/0/100 psi/kPa | PTS863-TS | PTS873-TS |
| 30"/0/150 psi/kPa | PTS864-TS | PTS874-TS |
| 30"/0/200 psi/kPa | PTS866-TS | PTS876-TS |
| 30"/0/300 psi/kPa | PTS867-TS | PTS877-TS |
| 0/15 psi/kPa | PTS821-TS | PTS921-TS |
| 0/30 psi/kPa | PTS822-TS | PTS922-TS |
| 0/60 psi/kPa | PTS823-TS | PTS923-TS |
| 0/100 psi/kPa | PTS824-TS | PTS924-TS |
| 0/160 psi/kPa | PTS825-TS | PTS925-TS |
| 0/200 psi/kPa | PTS826-TS | PTS926-TS |
| 0/300 psi/kPa | PTS827-TS | PTS927-TS |
| 0/400 psi/kPa | PTS880-TS | PTS881-TS |
| 0/600 psi/kPa | PTS828-TS | PTS928-TS |
| 0/1,000 psi/kPa | PTS829-TS | PTS929-TS |
| 0/1,500 psi/kPa | PTS835-TS | PTS935-TS |
| 0/2,000 psi/kPa | PTS836-TS | PTS936-TS |
| 0/3,000 psi/kPa | PTS831-TS | PTS931-TS |
| 0/5,000 psi/kPa | PTS832-TS | PTS852-TS |

Other ranges and connection sizes available upon request. For scale change, refer to How to Order Guide for scale codes.

**For options, attach suffix to end of order code: i.e. PTS820-TS-25DRY for DRY CASE**

**Option suffix:**

25BF = 2.5" (63mm) Back flange
25BOOT = 2.5" (63mm) Protective black rubber boot
25DRY = Supply 2.5" (63mm) gauge dry
25FF = 2.5" (63mm) Front flange
25UC = 2.5" (63mm) U-Clamp
SG-25 = 2.5" (63mm) Safety glass lens

### 2.5" Bottom Connection with Back Flange

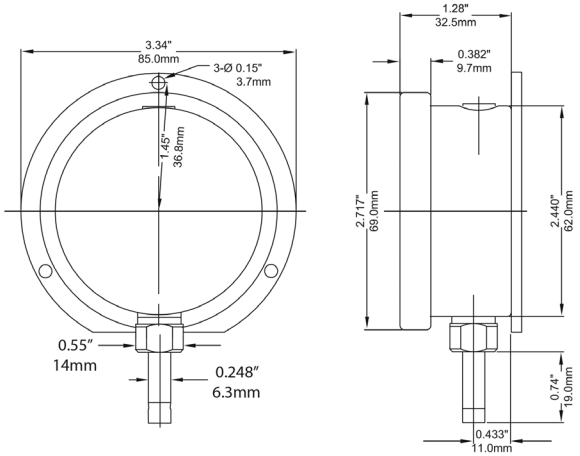


### 2.5" Back Connection with Back Flange

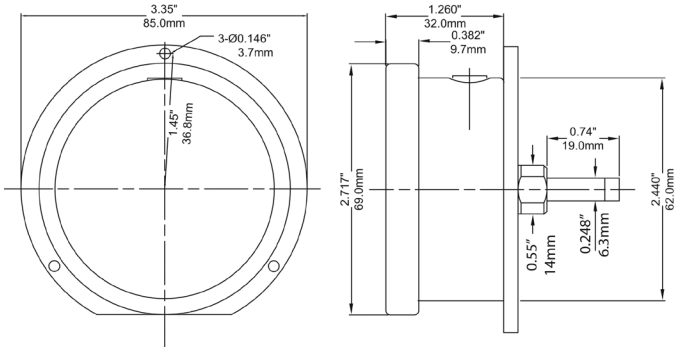


### 2.5" Back Connection with Front Flange

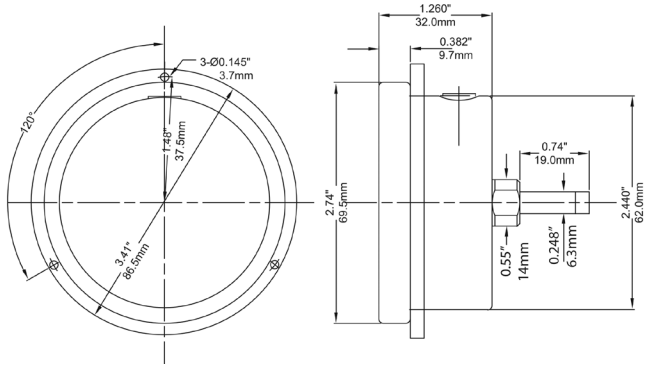


### 2.5" Back Connection with U-Clamp

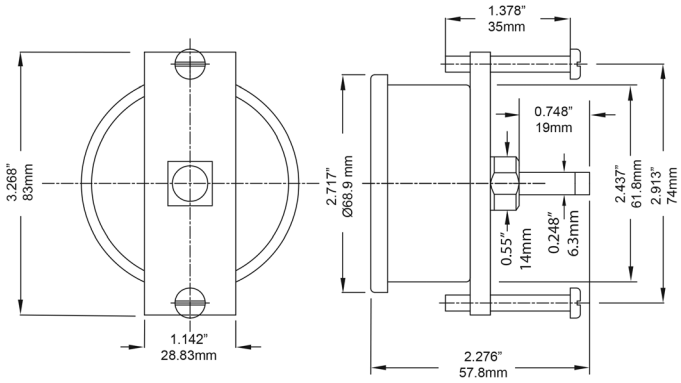

# PXT Xmas Tree Gauge




## Description & Features:

- High quality, heavy duty gauge ideal for corrosive environments
- Stainless steel liquid filled gauge (dry optional)
- 1/2” NPT bottom
- Stainless Steel wetted parts
- Heavy duty movement and Bourdon Tube
- Restrictor standard
- ASME B40, 100 compliant
- 5 year warranty

## Applications:

- Outdoor and severe ambient and process conditions where harmful vibration and pulsation are present
- Designed to the specific needs of oil field equipment

| Specifications | |
|---|---|
| **Dial** | 4” (100mm) white aluminum with black markings |
| **Case** | AISI 304 SS |
| **Lens** | Safety glass standard; acrylic optional |
| **Ring** | AISI 304 SS |
| **Socket** | Welded, 316L SS |
| **Connection** | 1/2” NPT standard, 1/4” NPT available |
| **Bourdon Tube** | 316L SS, seamless drawn |
| **Movement** | 304 SS with under and overload stops |
| **Pointer** | Aluminum, anodized black, micrometer adjustable |
| **Welding** | TIG |
| **Fill Liquid** | Glycerin |
| **Over-pressure Limit** | 25% for pressures up to 1,450 psi (9,998 kPa)<br>15% for pressures over 1,450 psi (9,998 kPa) |
| **Gasket Materials** | EPDM |
| **Working Pressure** | Maximum 75% of full scale value |
| **Ambient/Process Temperature** | Dry: -40°F to 200°F (-40°C to 93°C)<br>Glycerin filled: -4°F to 150°F (-20°C to 65°C) |
| **Accuracy** | ±1% ANSI/ASME Grade 1A |
| **Enclosure Rating** | IP66 per EN60529-1 (IEC529-1) |

## Order Codes

| Range | Code |
|---|---|
| 0/1,000 psi | PXT1134 |
| 0/1,500 psi | PXT1135 |
| 0/2,000 psi | PXT1136 |
| 0/3,000 psi | PXT1137 |
| 0/5,000 psi | PXT1138 |
| 0/10,000 psi | PXT1139 |
| 0/15,000 psi | PXT1140 |
| 0/20,000 psi | PXT1141 |

Other ranges and connection sizes available upon request. For scale change, refer to How To Prder Guide for scale codes. 1/4” NPT connection available upon request.
**For options, attach suffix to end of order code i.e. PXT1137-G for GLYCERIN FILL**

**Option Suffix:**
G = Glycerin filled
SG-4 = 4” (100mm) Safety glass lens
SSF4 = 4” (100mm) Silicone filled
ZR = StabiliZR® movement

# P9S 90 Series Gauge




## Description & Features:

- A general-purpose gauge that is serviceable and pulsation resistant
- 1.5” (40mm) to 3.5” (90mm) dial sizes
- Dampened movement combined with a flutterless pointer
- Removable lens
- Zero-adjustment
- ASME B40.100 compliant
- CRN registered
- ±2-1-2% accuracy
- 5 year warranty

## Applications:

- Compressors, filters, regulators, water pumps, paint sprayers and a variety of other rapid pressure fluctuation applications
- Suitable for non-clogging and non-corroding media

| Specifications | |
|---|---|
| **Dial** | 1.5” (40mm), 2” (50mm), 2.5” (63mm), 3.5” (90mm) white aluminum with black and red markings |
| **Case** | Steel, painted black |
| **Lens** | Acrylic, threaded |
| **Socket** | Brass |
| **Connection** | 1/8” NPT or 1/4” NPT standard |
| **Bourdon Tube** | Phosphor bronze |
| **Movement** | Brass (flutterless) with zero adjustment |
| **Pointer** | Aluminum, black |
| **Welding** | <1,000 psi: 60% tin 40% lead, ≥1,000 psi: silver alloy |
| **Over-pressure Limit** | 25% of full scale value |
| **Working Pressure** | Maximum 75% of full scale value |
| **Ambient/Process Temperature** | -40°F to 150°F (-40°C to 65°C) |
| **Accuracy** | ±2-1-2% ANSI/ASME Grade A |
| **Enclosure Rating** | IP52 |
| **Warning** | ⚠ **WARNING:** This product can expose you to chemicals including lead, which is known to the State of California to cause cancer and birth defects or other reproductive harm. For more information go to www.P65Warnings.ca.gov. |

## 1.5” Bottom Connection

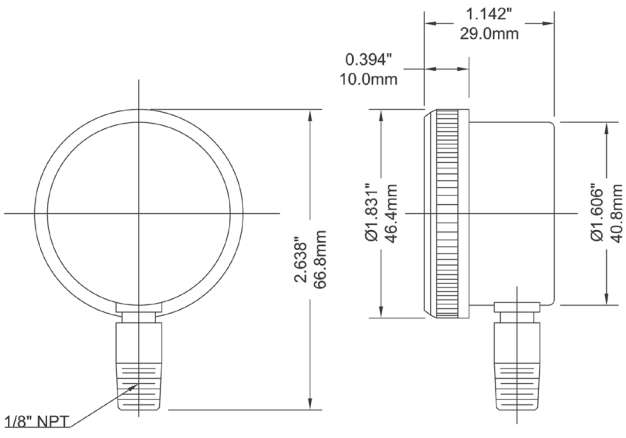


## 1.5” Back Connection

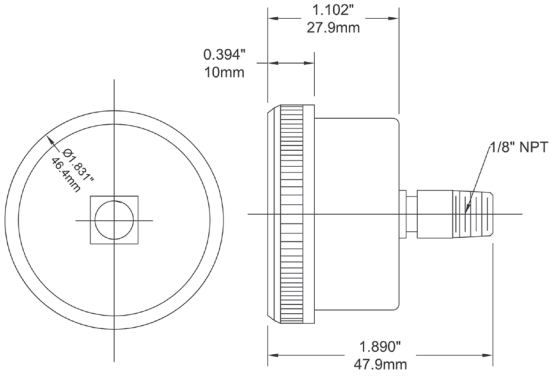

## Order Codes (products in bold are normally stock in North America)

| Dial Size | 1.5" (40mm) | | 2" (50mm) | | | | 2.5" (63mm) | | 3.5" (90mm) | |
|---|---|---|---|---|---|---|---|---|---|---|
| Connection | 1/8" Bottom | 1/8" Back (CB) | 1/8" Bottom | 1/8" Back (CB) | 1/4" Bottom | 1/4" Back (CB) | 1/4" Bottom | 1/4" Back (CB) | 1/4" Bottom | 1/4" Back (CB) |
| 30" Hg Vac/kPa | P9S901297 | P9S901397 | P9S90195 | P9S901424 | P9S90135 | P9S901428 | P9S90210 | P9S901431 | P9S90220 | P9S901455 |
| 30"/0/15 psi/kPa | - | - | - | - | - | - | P9S90152 | - | - | - |
| 30"/0/30 psi/kPa | - | - | - | - | - | - | P9S90153 | - | - | - |
| 30"/0/60 psi/kPa | - | - | - | - | - | - | P9S90154 | - | - | - |
| 30"/0/100 psi/kPa | - | - | - | - | - | - | P9S90155 | - | - | - |
| 0/15 psi/kPa | P9S901299 | P9S901399 | P9S90196 | P9S901425 | P9S90136 | P9S901429 | **P9S90211** | P9S901436 | P9S90229 | P9S901464 |
| 0/30 psi/kPa | P9S901300 | **P9S901400** | P9S90206 | P9S901402 | P9S90199 | **P9S901403** | **P9S90212** | P9S901437 | P9S90221 | P9S901456 |
| 0/60 psi/kPa | P9S901301 | P9S901401 | P9S90207 | P9S901404 | P9S90201 | P9S901405 | **P9S90213** | P9S901438 | P9S90222 | P9S901457 |
| 0/100 psi/kPa | **P9S901320** | **P9S901420** | P9S90208 | P9S901406 | **P9S90202** | P9S901407 | **P9S90214** | P9S901439 | **P9S90223** | P9S901458 |
| 0/160 psi/kPa | P9S901321 | **P9S901421** | P9S90197 | P9S901408 | P9S90203 | **P9S901409** | **P9S90215** | P9S901440 | P9S90224 | P9S901459 |
| 0/200 psi/kPa | P9S901322 | P9S901422 | P9S90209 | P9S901426 | **P9S90204** | P9S901410 | P9S90216 | P9S901441 | **P9S90225** | P9S901460 |
| 0/300 psi/kPa | P9S901323 | P9S901423 | P9S90198 | P9S901427 | P9S90205 | P9S901411 | P9S90217 | P9S901442 | P9S90226 | P9S901461 |
| 0/400 psi/kPa | P9S901324 | P9S901443 | P9S901449 | P9S901445 | P9S901451 | P9S901447 | P9S90219 | P9S901453 | P9S90227 | P9S901462 |
| 0/600 psi/kPa | P9S901325 | **P9S901444** | P9S901450 | P9S901446 | P9S901452 | P9S901448 | P9S90218 | P9S901454 | **P9S90228** | P9S901463 |

Other ranges and connection sizes available upon request.

### 2" Bottom Connection

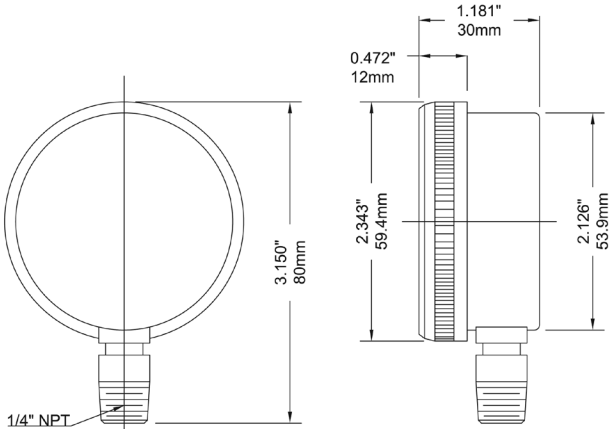


### 2" Back Connection

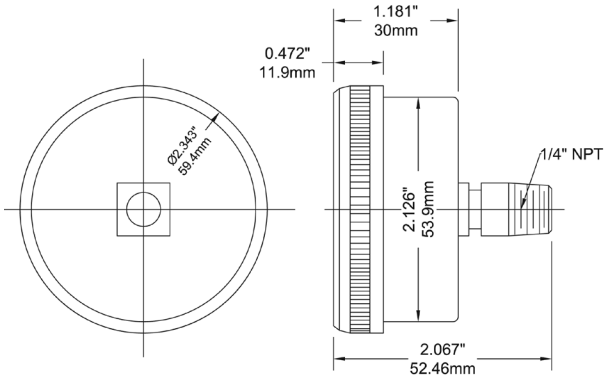

## 2.5” Bottom Connection

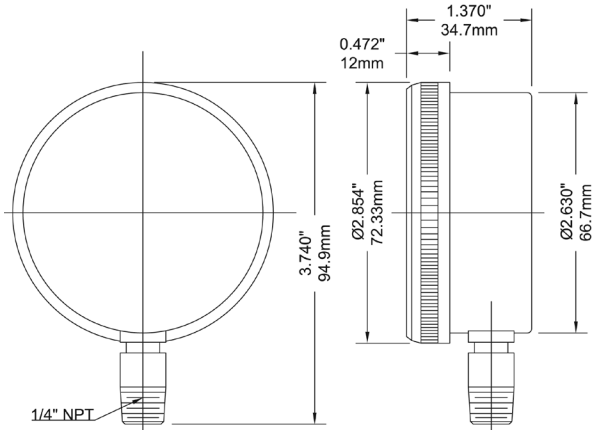


## 2.5” Back Connection

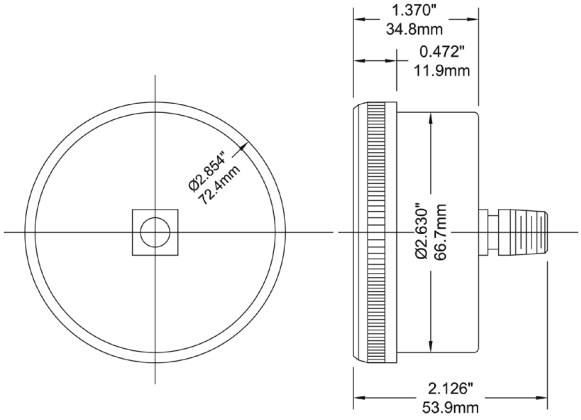


## 3.5” Bottom Connection

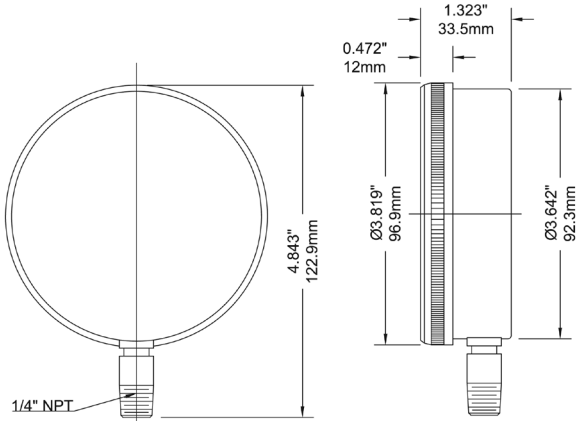


## 3.5” Back Connection

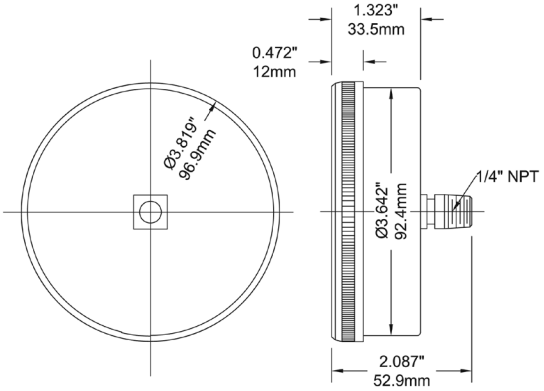

# P9S 90 Series Gauge

## Engineering Codes

| P9S ENGINEERED PART NUMBER | |
|---|---|
| **DIAL SIZE** | 1.5" (40MM) |
| | 2.0" (50MM) |
| | 2.5" (63mm) |
| | 3.5" (63mm) |
| **PRESSURE SCALE & RANGE** | SEE PRESSURE RANGES |
| **CASE MATERIAL** | BLACK STEEL |
| **WETTED PARTS** | BRASS/BRONZE |
| **PROCESS CONNECTION SIZE** | 1/4" |
| | 1/2" |
| **PROCESS CONNECTION TYPE** | NPT |
| | BSPP (G), PARALLEL |
| | BSPT (R), TAPERED |
| **PROCESS CONNECTION LOCATION** | BOTTOM, STEM |
| | CENTRE BACK |
| **ACCURACY %** | 2-1-2 |
| **OPTIONS, LIST IN ALPHA-NUMERIC ORDER** | EN-837 ON-DIAL |
| | ASME B40.100 ON-DIAL |
| | CUSTOM DIAL, SIMPLE |
| | CUSTOM DIAL, COMPLEX |
| | RED SET POINTER |
| | SPECIAL |

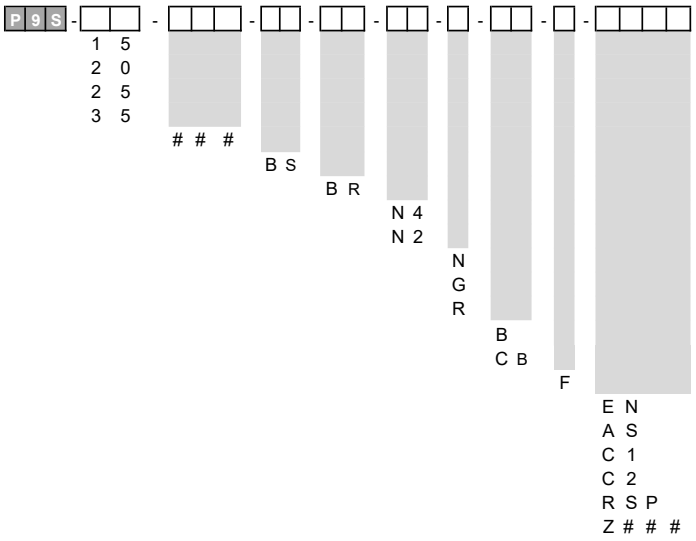

# P9U 90 Series Panel Mounted Gauge






## Description & Features:

- General purpose panel mounted gauge with 1.5” (40mm) to 3.5” (90mm) dial sizes
- Flutterless pointer
- Dampened movement
- Removable lens
- Zero-adjustment
- ±2-1-2% accuracy
- ASME B40.100 compliant
- CRN registered
- 5 year warranty

## Applications:

- Panels, compressor equipment, water and oil pumps where rapid pressure fluctuations or system vibration require a stable pointer
- Suitable for non-clogging and non-corrossive media

| Specifications | |
|---|---|
| **Dial** | 1.5” (40mm), 2” (50mm), 2.5” (63mm), 3.5” (90mm), white aluminum with black and red markings |
| **Case** | Steel, painted black |
| **Lens** | Acrylic, threaded |
| **Socket** | Brass |
| **Connection** | 1/8” NPT or 1/4” NPT standard |
| **Bourdon Tube** | Phosphor bronze |
| **Movement** | Brass (flutterless movement) |
| **Pointer** | Aluminum, black |
| **Welding** | Silver alloy |
| **Over-pressure Limit** | 25% of full scale value |
| **Working Pressure** | Maximum 75% of full scale value |
| **Ambient/Process Temperature** | -40°F to 150°F (-40°C to 65°C) |
| **Accuracy** | ±2-1-2% ANSI/ASME Grade A |
| **Enclosure Rating** | IP52 |
| **Warning** | ⚠ **WARNING:** This product can expose you to chemicals including lead, which is known to the State of California to cause cancer and birth defects or other reproductive harm. For more information go to www.P65Warnings.ca.gov. |

## Order Codes (products in bold are normally stock in North America)

| Dial Size | 1.5” (40mm) | 2” (50mm) | | 2.5” (63mm) | 3.5” (90mm) |
|---|---|---|---|---|---|
| Connection | 1/8” Back (CB) | 1/8” Back (CB) | 1/4” Back (CB) | 1/4” Back (CB) | 1/4” Back (CB) |
| Panel Cut-out | 1.69” (43mm) | 2.11” (53.5mm) | 2.11” (53.5mm) | 2.66” (67.5mm) | 3.68” (93.5mm) |
| Overall O.D. | 1.85” (47.7mm) | 2.27” (57.9mm) | 2.27” (57.9mm) | 2.82” (71.9mm) | 3.94” (98.9mm) |
| 30” Hg Vac/kPa | P9U901397UC | P9U901424UC | P9U901428UC | P9U901431UC | P9U901455UC |
| 30”/0/15 psi/kPa | - | - | - | - | - |
| 30”/0/30 psi/kPa | - | - | - | - | - |
| 30”/0/60 psi/kPa | - | - | - | - | - |
| 30”/0/100 psi/kPa | - | - | - | - | - |
| 0/15 psi/kPa | P9U901399UC | P9U901425UC | P9U901429UC | P9U901436UC | P9U901464UC |
| 0/30 psi/kPa | P9U901400UC | P9U901402UC | **P9U901403UC** | P9U901437UC | P9U901456UC |
| 0/60 psi/kPa | P9U901401UC | **P9U901404UC** | P9U901405UC | P9U901438UC | P9U901457UC |
| 0/100 psi/kPa | P9U901420UC | **P9U901406UC** | P9U901407UC | P9U901439UC | P9U901458UC |
| 0/160 psi/kPa | P9U901421UC | **P9U901408UC** | **P9U901409UC** | P9U901440UC | P9U901459UC |
| 0/200 psi/kPa | P9U901422UC | P9U901426UC | P9U901410UC | **P9U901441UC** | P9U901460UC |
| 0/300 psi/kPa | P9U901423UC | P9U901427UC | P9U901411UC | P9U901442UC | P9U901461UC |
| 0/400 psi/kPa | P9U901443UC | P9U901445UC | P9U901447UC | P9U901453UC | P9U901462UC |
| 0/600 psi/kPa | P9U901444UC | P9U901446UC | P9U901448UC | P9U901454UC | P9U901463UC |

Other ranges and connection sizes available upon request. For scale change, refer to How to Order Guide for scale codes.

### 1.5” Back Connection with U-Clamp

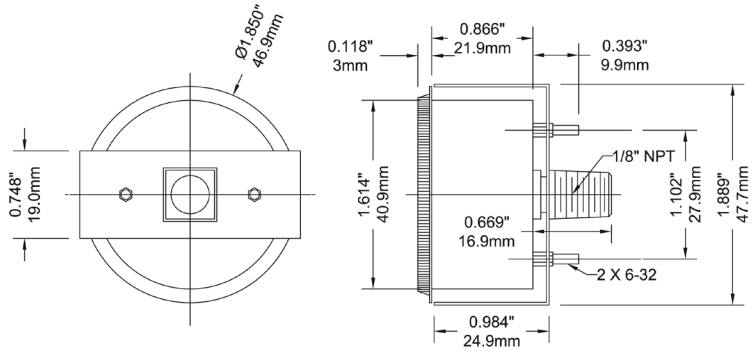


### 2” Back Connection with U-Clamp

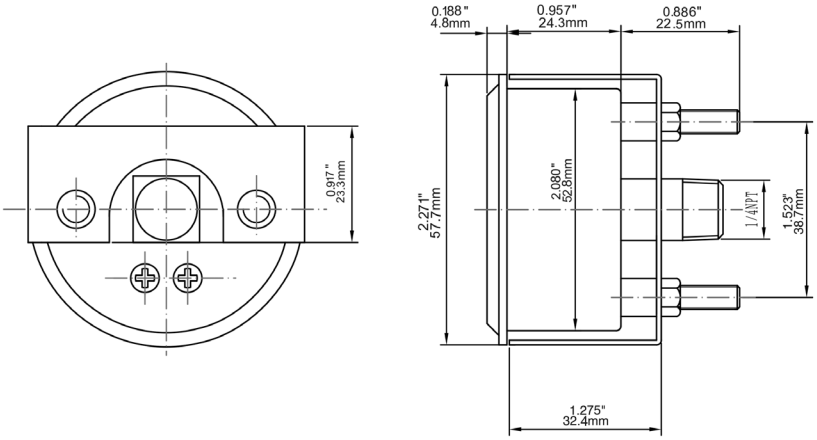

## 2.5” Back Connection with U-Clamp

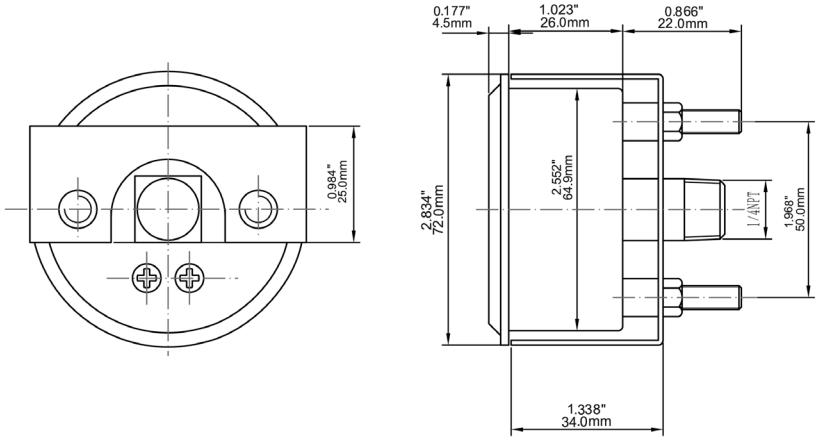


## 3.5” Back Connection with U-Clamp

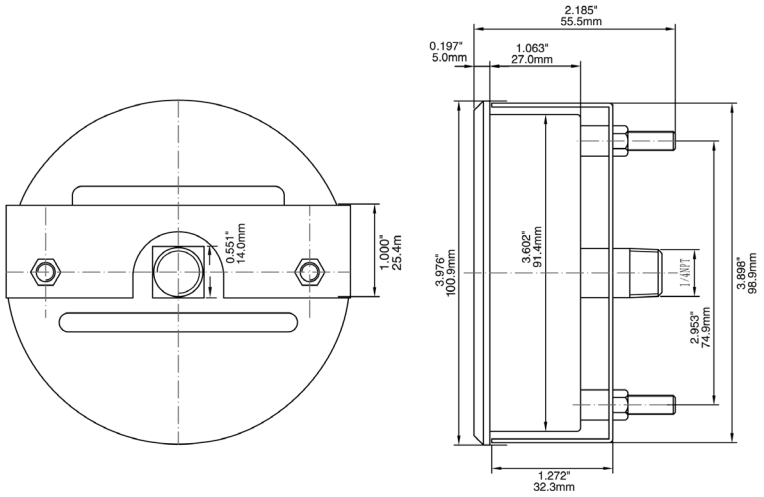

# P9U 90 Series Panel Mounted Gauge

## Engineering Codes

| P9U ENGINEERED PART NUMBER | |
|---|---|
| **DIAL SIZE** | 1.5" (40MM) |
| | 2.0" (50MM) |
| | 2.5" (63mm) |
| | 3.5" (63mm) |
| **PRESSURE SCALE & RANGE** | SEE PRESSURE RANGES |
| **CASE MATERIAL** | BLACK STEEL |
| **WETTED PARTS** | BRASS/BRONZE |
| | 304SS |
| **PROCESS CONNECTION SIZE** | 1/4" |
| | 1/2" |
| **PROCESS CONNECTION TYPE** | NPT |
| | BSPP (G), PARALLEL |
| | BSPT (R), TAPERED |
| **PROCESS CONNECTION LOCATION** | CENTRE BACK |
| **ACCURACY %** | 2-1-2 |
| **OPTIONS, LIST IN ALPHA-NUMERIC ORDER** | EN-837 ON-DIAL |
| | ASME B40.100 ON-DIAL |
| | CUSTOM DIAL, SIMPLE |
| | CUSTOM DIAL, COMPLEX |
| | RED SET POINTER |
| | SPECIAL |

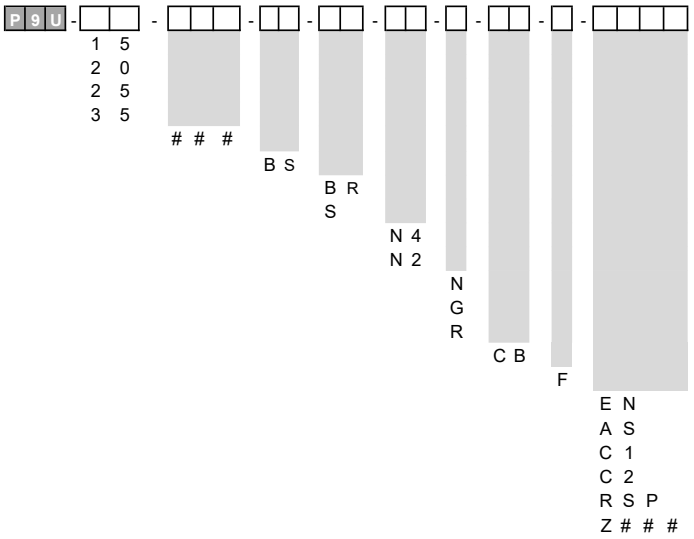

# PEM
# PEM-LF
# PEM-UBA
# Economy Gauge,
# Lead Free Economy Gauge

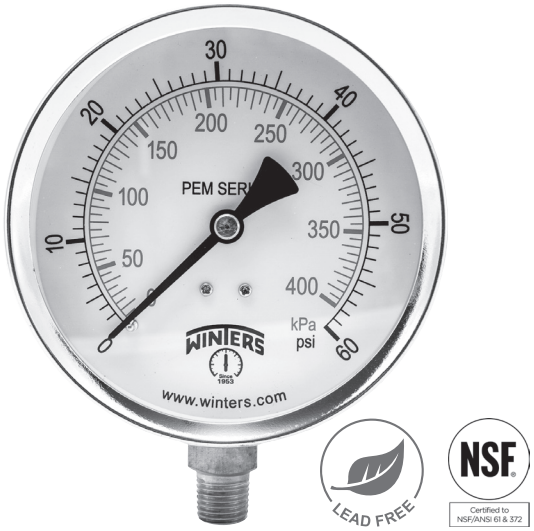


## Description & Features:

- Most economical, all-purpose pressure gauge
- 1.5” (40mm) to 4” (100mm) sizes
- Friction bezel rings
- Black steel case
- Brass or lead free brass wetted parts
- ±3-2-3% and 2.5% accuracy
- ASME B40.100 compliant (EN837-1 available)
- CRN registered
- Lead free version NSF-61-372 and UBA certified
- 5 year warranty

## Applications:

- General purpose gauge for plumbing, heating, air conditioning, pneumatic, hydraulic, water tanks, air compressors, OEM
- NSF and UBA versions suitable for drinking water systems
- Suitable for non-clogging and non-corroding media

| Specifications | |
|---|---|
| **Dial** | 1.5” (40mm), 2” (50mm), 2.5” (63mm), 4” (100mm) white aluminum with black and red markings |
| **Case** | Steel, painted black (plastic available) |
| **Lens** | 1.5” (40mm), 2” (50mm), 2.5” (63mm): Acrylic<br>4” (100mm): Glass |
| **Ring** | 1.5” (40mm), 2” (50mm): Steel, painted black<br>2.5” (63mm), 4” (100mm): Steel, chrome plated |
| **Socket** | PEM: Brass<br>PEM-LF/UBA: Lead free brass, NSF-61-372 and UBA certified |
| **Connection** | 1/8” NPT or 1/4” NPT standard |
| **Bourdon Tube** | PEM: Phosphor bronze<br>PEM-LF/UBA: Lead free brass, NSF-61-372 and UBA certified |
| **Movement** | PEM: Brass<br>PEM-LF/UBA (1.5”, 2”, 2.5”): SS, PEM-LF/UBA (4”): Lead free brass, NSF-61-372 and UBA certified |
| **Pointer** | Aluminum, black |
| **Welding** | Silver alloy |
| **Over-pressure Limit** | 25% of full scale value |
| **Working Pressure** | Maximum 75% of full scale value |
| **Ambient/Process Temperature** | -40°F to 150°F (-40°C to 65°C) |
| **Accuracy** | ±3-2-3% standard, ±2.5% optional |
| **Enclosure Rating** | IP52 |
| **Warning** | ⚠ **WARNING:** This product can expose you to chemicals including lead, which is known to the State of California to cause cancer and birth defects or other reproductive harm. For more information go to www.P65Warnings.ca.gov. |

# Economy Gauge, Lead Free Economy Gauge



## PEM Order Codes (products in bold are normally stock in North America)

| Dial Size | 1.5" (40mm) | | 2" (50mm) | | | | | 2.5" (63mm) | | 4" (100mm) |
|---|---|---|---|---|---|---|---|---|---|---|
| Connection | 1/8" Bottom | 1/8" Back (CB) | 1/8" Bottom | 1/8" Back (CB) | 1/4" Bottom | 1/4" Back (CB) | 1/4" psi only Bottom | 1/4" Bottom | 1/4" Back (CB) | 1/4" Bottom |
| Case Material | Steel | | | | | | Plastic | Steel | | |
| 30" Hg Vac/kPa | **PEM1297** | **PEM1397** | **PEM195** | **PEM1424** | **PEM135** | **PEM1428** | **PEM1398** | **PEM210** | **PEM1431** | **PEM220** |
| 30"/0/15 psi/kPa | - | - | - | - | - | - | - | **PEM152** | - | - |
| 30"/0/30 psi/kPa | - | - | - | - | - | - | - | **PEM153** | - | - |
| 30"/0/60 psi/kPa | - | - | - | - | - | - | - | **PEM154** | - | - |
| 30"/0/100 psi/kPa | - | - | - | - | - | - | - | PEM155 | - | - |
| 0/15 psi/kPa | **PEM1299** | **PEM1399** | **PEM196** | **PEM1425** | **PEM136** | **PEM1429** | - | **PEM211** | **PEM1436** | **PEM295** |
| 0/30 psi/kPa | **PEM1300** | **PEM1400** | **PEM206** | **PEM1402** | **PEM199** | **PEM1403** | PEM200 | **PEM212** | **PEM1437** | **PEM221** |
| 0/60 psi/kPa | **PEM1301** | **PEM1401** | **PEM207** | **PEM1404** | **PEM201** | **PEM1405** | PEM194 | **PEM213** | **PEM1438** | **PEM222** |
| 0/100 psi/kPa | **PEM1320** | **PEM1420** | **PEM208** | **PEM1406** | **PEM202** | **PEM1407** | - | **PEM214** | **PEM1439** | **PEM223** |
| 0/160 psi/kPa | **PEM1321** | **PEM1421** | PEM197 | **PEM1408** | **PEM203** | **PEM1409** | - | **PEM215** | **PEM1440** | **PEM224** |
| 0/200 psi/kPa | **PEM1322** | **PEM1422** | **PEM209** | **PEM1426** | **PEM204** | **PEM1410** | - | **PEM216** | **PEM1441** | **PEM225** |
| 0/300 psi/kPa | **PEM1323** | **PEM1423** | **PEM198** | PEM1427 | **PEM205** | **PEM1411** | - | **PEM217** | **PEM1442** | **PEM226** |
| 0/400 psi/kPa | - | - | - | - | - | PEM1414 | - | **PEM219** | PEM3412 | **PEM227** |
| 0/600 psi/kPa | - | - | - | - | - | PEM1412 | - | **PEM218** | PEM3413 | - |
| 0/1,000 psi/kPa | - | - | - | - | - | - | - | **PEM290** | - | - |
| 0/3,000 psi/kPa | - | - | - | - | - | - | - | **PEM291** | - | - |
| 0/5,000 psi/kPa | - | - | - | - | - | - | - | **PEM292** | - | - |

## PEM-LF Order Codes (products in bold are normally stock in North America)

| Dial Size | 1.5" (40mm) | | 2" (50mm) | | | | 2.5" (63mm) | | 4" (100mm) |
|---|---|---|---|---|---|---|---|---|---|
| Connection | 1/8" Bottom | 1/8" Back (CB) | 1/8" Bottom | 1/8" Back (CB) | 1/4" Bottom | 1/4" Back (CB) | 1/4" Bottom | 1/4" Back (CB) | 1/4" Bottom |
| Case Material | Steel | | | | | | Steel | | |
| 30" Hg Vac/kPa | PEM1297LF | PEM1397LF | PEM195LF | PEM1424LF | PEM135LF | PEM1428LF | **PEM210LF** | PEM1431LF | PEM220LF |
| 30"/0/15 psi/kPa | - | - | - | - | - | - | PEM152LF | - | - |
| 30"/0/30 psi/kPa | - | - | - | - | - | - | PEM153LF | - | - |
| 30"/0/60 psi/kPa | - | - | - | - | - | - | PEM154LF | - | - |
| 30"/0/100 psi/kPa | - | - | - | - | - | - | PEM155LF | - | - |
| 0/15 psi/kPa | PEM1299LF | PEM1399LF | PEM196LF | PEM1425LF | **PEM136LF** | **PEM1429LF** | **PEM211LF** | PEM1436LF | - |
| 0/30 psi/kPa | PEM1300LF | **PEM1400LF** | PEM206LF | PEM1402LF | **PEM199LF** | **PEM1403LF** | **PEM212LF** | PEM1437LF | PEM221LF |
| 0/60 psi/kPa | PEM1301LF | PEM1401LF | PEM207LF | PEM1404LF | **PEM201LF** | **PEM1405LF** | **PEM213LF** | PEM1438LF | **PEM222LF** |
| 0/100 psi/kPa | **PEM1320LF** | **PEM1420LF** | **PEM208LF** | PEM1406LF | **PEM202LF** | **PEM1407LF** | **PEM214LF** | **PEM1439LF** | **PEM223LF** |
| 0/160 psi/kPa | PEM1321LF | **PEM1421LF** | PEM197LF | PEM1408LF | **PEM203LF** | **PEM1409LF** | **PEM215LF** | **PEM1440LF** | **PEM224LF** |
| 0/200 psi/kPa | PEM1322LF | **PEM1422LF** | **PEM209LF** | PEM1426LF | **PEM204LF** | **PEM1410LF** | **PEM216LF** | **PEM1441LF** | PEM225LF |
| 0/300 psi/kPa | PEM1323LF | PEM1423LF | PEM198LF | PEM1427LF | **PEM205LF** | PEM1411LF | **PEM217LF** | PEM1442LF | PEM226LF |
| 0/400 psi/kPa | - | - | - | - | - | - | PEM219LF | - | PEM227LF |
| 0/600 psi/kPa | - | - | - | - | - | - | PEM218LF | PEM3413LF | - |
| 0/1,000 psi/kPa | - | - | - | - | - | - | PEM290LF | - | - |
| 0/3,000 psi/kPa | - | - | - | - | - | - | PEM291LF | - | - |
| 0/5,000 psi/kPa | - | - | - | - | - | - | PEM292LF | - | - |

Other ranges and connection sizes available upon request.

# Economy Gauge,
# Lead Free Economy Gauge



## 1.5” Bottom Connection

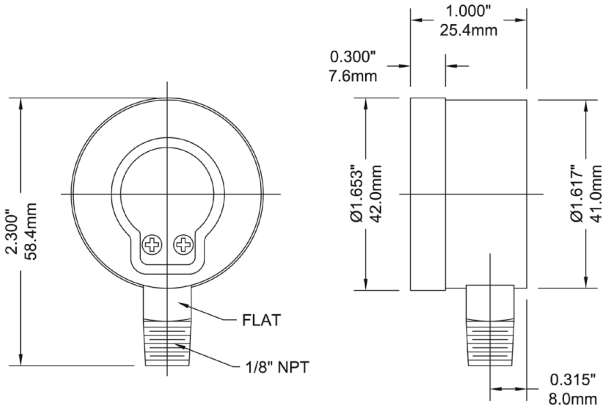


## 1.5” Back Connection

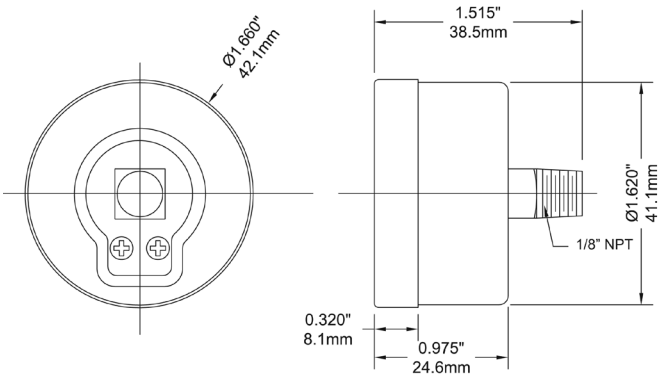


## 2” Bottom Connection

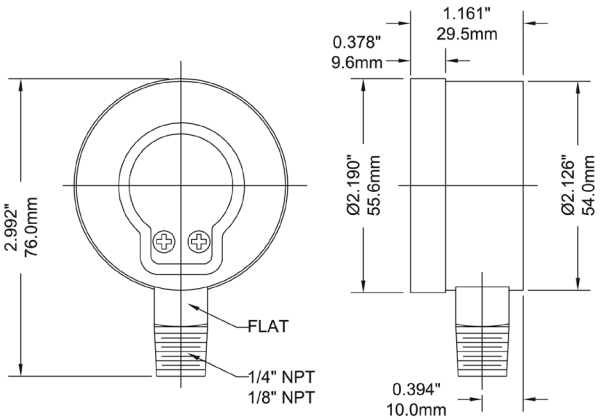


## 2” Back Connection

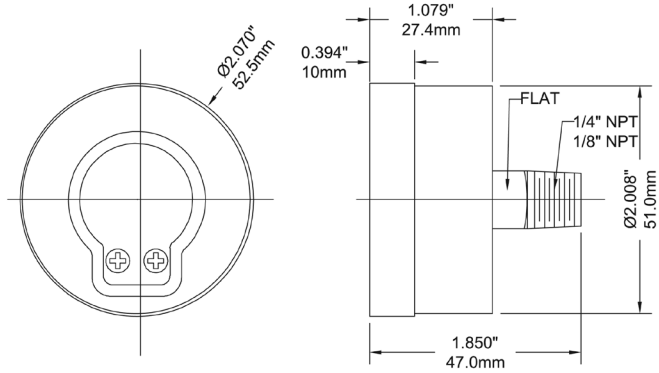


## 2.5” Bottom Connection

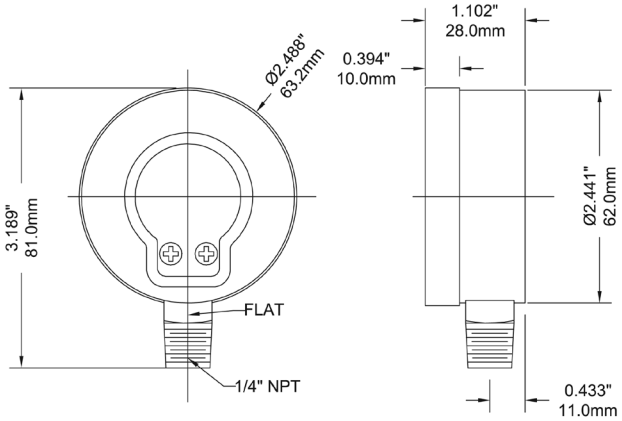


## 2.5” Back Connection

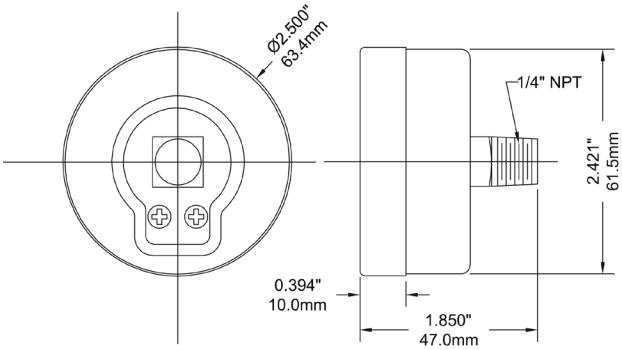


## 4” Bottom Connection

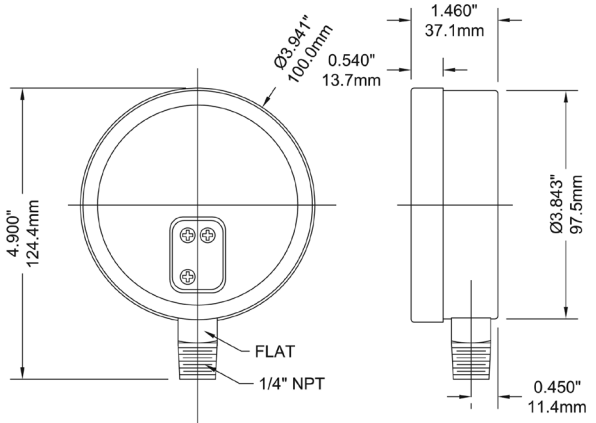

# Economy Gauge, Lead Free Economy Gauge



## Engineering Codes

| PEM ENGINEERED PART NUMBER | | P E M - □□ - □□□ - □□ - □□ - □□ - □□ - □ - □□□□ |
|---|---|---|
| **DIAL SIZE** | 1.5" (40MM) | 15 |
| | 2.0" (50MM) | 20 |
| | 2.5" (63mm) | 25 |
| | 4" (100mm) | 40 |
| **PRESSURE SCALE & RANGE** | SEE PRESSURE RANGES | ### |
| **CASE MATERIAL** | BLACK STEEL | BS |
| | 304SS | SS |
| | PLASTIC (ABS) | SP |
| **WETTED PARTS** | BRASS/BRONZE | BR |
| | 304SS | SS |
| **PROCESS CONNECTION SIZE** | 1/8" | N8 |
| | 1/4" | N4 |
| | 1/2" | N2 |
| **PROCESS CONNECTION TYPE** | NPT | N |
| | BSPP (G), PARALLEL | G |
| | BSPT (R), TAPERED | R |
| | BSPT (SPIGOT) | B |
| | M14*1.5 | M4 |
| | M20*1.5 | M2 |
| **PROCESS CONNECTION LOCATION** | BOTTOM, STEM | B |
| | CENTRE BACK | CB |
| | 12 O'CLOCK | 12 |
| | 3 O'CLOCK | 3 |
| | 6 O'CLOCK | 6 |
| | 9 O'CLOCK | 9 |
| **ACCURACY %** | 3-2-3 | C |
| | 2.5 | D |
| **OPTIONS, LIST IN ALPHA-NUMERIC ORDER** | GLASS LENS | GL |
| | SNAP-IN LENS | SI |
| | BLACK STEEL POLISHED RING | SR |
| | CHROME POLISHED RING | CR |
| | U-CLAMP | UC |
| | BLOW-OUT DISK | BD |
| | RESTRICTED ORIFICE | RO |
| | EN-837 ON-DIAL | EN |
| | ASME B40.100 ON-DIAL | AS |
| | NO OIL (HYDROCARBON FREE), ON DIAL | HF |
| | PROTECTIVE RUBBER BOOT | PB |
| | CUSTOM DIAL, SIMPLE | C1 |
| | CUSTOM DIAL, COMPLEX | C2 |
| | RED SET POINTER | RSP |
| | ROSH COMPLIANT | R |
| | LEAD FREE, NSF 61/372 COMPLIANT | LF |
| | UBA CERTIFIED | UBA1 |
| | STABILIZR® | ZR |
| | SPECIAL | Z### |

# PEU Economy Panel Mounted Gauge




## Description & Features:

- Most economical pressure gauge used for panels
- 1.5” (40mm) to 2.5” (63mm) dial sizes
- Black steel case
- Brass wetted parts
- Stainless steel crimp-on bezel
- Stud-style U-Clamp design for secure panel mounting
- ±3-2-3% accuracy
- Dual scale (psi/kPa)
- ASME B40.100 compliant
- CRN registered
- 5 year warranty

## Applications:

- For measuring gases, air, water and oils when equipment or processes require an economical panel mounted gauge
- Suitable for non-clogging, non-corrossive media

| Specifications | |
|---|---|
| **Dial** | 1.5” (40mm), 2” (50mm), 2.5” (63mm) white aluminum with black and red markings |
| **Case** | Steel, painted black |
| **Lens** | Acrylic |
| **Ring** | SS |
| **Socket** | Brass |
| **Connection** | 1/8” NPT or 1/4” NPT standard |
| **Bourdon Tube** | Phosphor bronze |
| **Movement** | Brass |
| **Pointer** | Aluminum, black |
| **Welding** | Silver alloy |
| **Over-pressure Limit** | 25% of full scale value |
| **Working Pressure** | Maximum 75% of full scale value |
| **Ambient/Process Temperature** | -40°F to 150°F (-40°C to 65°C) |
| **Accuracy** | ±3-2-3% ANSI/ASME Grade B |
| **Enclosure Rating** | IP52 |
| **Warning** | ⚠ **WARNING:** This product can expose you to chemicals including lead, which is known to the State of California to cause cancer and birth defects or other reproductive harm. For more information go to www.P65Warnings.ca.gov. |

## Order Codes (products in bold are normally stock in North America)

| Dial Size | 1.5” (40mm) | 2” (50mm) | 2” (50mm) | 2.5” (63mm) |
|---|---|---|---|---|
| **Connection** | **1/8”** | **1/8”** | **1/4”** | **1/4”** |
| 30” Hg Vac/kPa | **PEU1399UC** | PEU1396UC | PEU1428UC | PEU1431UC |
| 0/15 psi/kPa | **PEU1398UC** | **PEU1397UC** | PEU1429UC | PEU1436UC |
| 0/30 psi/kPa | **PEU1400UC** | **PEU1402UC** | **PEU1403UC** | PEU1437UC |
| 0/60 psi/kPa | **PEU1401UC** | PEU1404UC | **PEU1405UC** | PEU1438UC |
| 0/100 psi/kPa | **PEU1420UC** | **PEU1406UC** | **PEU1407UC** | **PEU1439UC** |
| 0/160 psi/kPa | **PEU1421UC** | **PEU1408UC** | **PEU1409UC** | **PEU1440UC** |
| 0/200 psi/kPa | PEU1422UC | **PEU1412UC** | PEU1410UC | PEU1441UC |
| 0/300 psi/kPa | PEU1423UC | PEU1413UC | PEU1411UC | PEU1442UC |

Other ranges and connection sizes available upon request.

## 1.5” Panel Mounted

**Panel cut-out**

1.63”(42mm)

**Outer diameter**

1.84”(47mm)

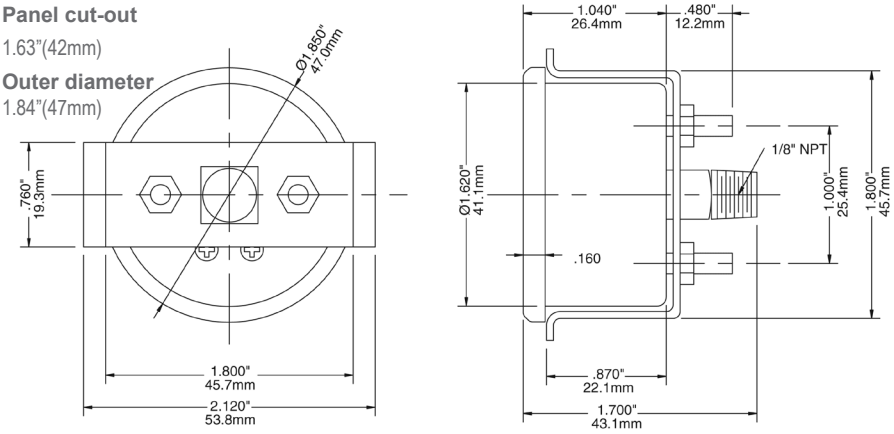


## 2” Panel Mounted

**Panel cut-out**

2.12”(54mm)

**Outer diameter**

2.29”(58mm)

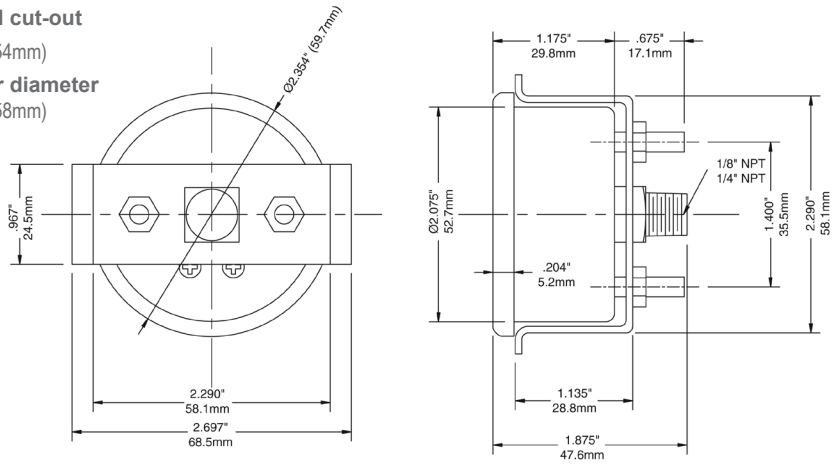


## 2.5” Panel Mounted

**Panel cut-out**

2.44”(62mm)

**Outer diameter**

2.65”(67mm)

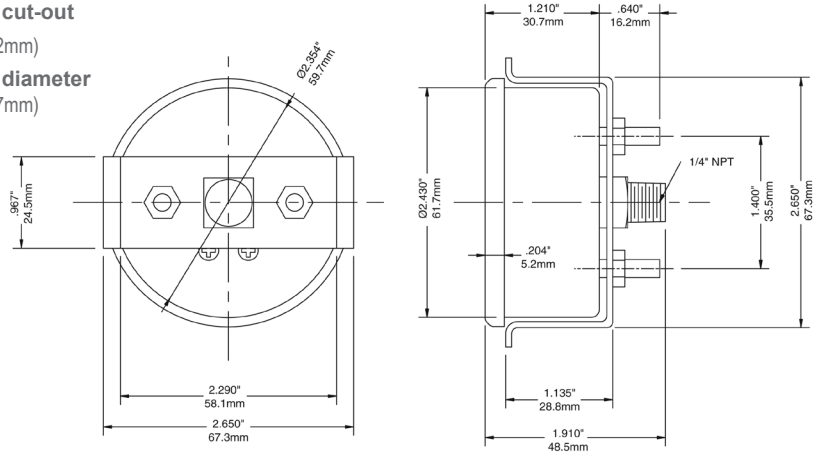

# PEU Economy Panel Mounted Gauge

## Engineering Codes

| PEU ENGINEERED PART NUMBER | | P E U - □□ - □□□ - □□ - □□ - □□ - □□ - □□ - □ - □□□□ |
|---|---|---|
| **DIAL SIZE** | 1.5" (40MM) | 1 5 |
| | 2.0" (50MM) | 2 0 |
| | 2.5" (63mm) | 2 5 |
| **PRESSURE SCALE & RANGE** | SEE PRESSURE RANGES | # # # |
| **CASE MATERIAL** | BLACK STEEL | B S |
| | 304SS | S |
| | PLASTIC (ABS) | P |
| **WETTED PARTS** | BRASS/BRONZE | B R |
| | 304SS | S |
| **PROCESS CONNECTION SIZE** | 1/8" | N 8 |
| | 1/4" | N 4 |
| **PROCESS CONNECTION TYPE** | NPT | N |
| | BSPP (G), PARALLEL | G |
| | BSPT (R), TAPERED | R |
| | BSPT (SPIGOT) | B |
| | M14*1.5 | M 4 |
| | M20*1.5 | M 2 |
| **PROCESS CONNECTION LOCATION** | CENTRE BACK | C B |
| **ACCURACY %** | 3-2-3 | C |
| **OPTIONS, LIST IN ALPHA-NUMERIC ORDER** | GLASS LENS | G L |
| | SNAP-IN LENS | S I |
| | BLACK STEEL POLISHED RING | S R |
| | CHROME POLISHED RING | C R |
| | BLOW-OUT DISK | B D |
| | RESTRICTED ORIFICE | R O |
| | EN-837 ON-DIAL | E N |
| | ASME B40.100 ON-DIAL | A S |
| | NO OIL (HYDROCARBON FREE), ON DIAL | H F |
| | PROTECTIVE RUBBER BOOT | P B |
| | CUSTOM DIAL, SIMPLE | C 1 |
| | CUSTOM DIAL, COMPLEX | C 2 |
| | RED SET POINTER | R S P |
| | ROSH COMPLIANT | R |
| | LEAD FREE, NSF 61/372 COMPLIANT | L F |
| | STABILIZR® | Z R |
| | SPECIAL | Z # # # |

# PDT | Differential Gauge




## Description & Features:

- Brass or stainless steel wetted parts
- Both conventional and balanced scale available
- ASME B40.100 compliant
- CRN registered
- 5 year warranty

## Applications:

- Single pointer to show difference from two pressure sources
- Typically used to measure pressure drops across a filter, pump or other equipment

| Specifications | |
|---|---|
| **Dial** | 4.5” (115mm), 6” (150mm) white aluminum with black markings |
| **Case** | Aluminum, painted black |
| **Front Flange** | SS |
| **Back Flange** | Black steel |
| **Lens** | Glass |
| **Ring** | 4.5” (115mm): SS<br>6“ (150mm): Aluminum |
| **Socket** | Brass or 316 SS |
| **Connections** | 1/4” NPT standard |
| **Scale** | PSID only |
| **Bourdon Tubes** | Phosphor bronze or AISI 316 SS, independent, matched |
| **Movement** | Brass |
| **Pointer** | Aluminum (micrometer) |
| **Welding** | Tin/copper alloy for brass internals, TIG argonarc for SS internals |
| **Over-pressure Limit** | 30% of full scale value |
| **Working Pressure** | Maximum 75% of full scale value |
| **Ambient/Process Temperature** | -40°F to 150°F (-40°C to 65°C) |
| **Accuracy** | ±1% ANSI/ASME Grade 1A |
| **Warning (brass internals only)** | ⚠ **WARNING:** This product can expose you to chemicals including lead, which is known to the State of California to cause cancer and birth defects or other reproductive harm. For more information go to www.P65Warnings.ca.gov. |

# PDT Differential Gauge

## Order Codes

| Dial Size | Max. Static Pressure | 4.5" (115mm) | | | | 6" (150mm) | | | |
|---|---|---|---|---|---|---|---|---|---|
| Connection | | 1/4" Bottom | 1/4" Back (LB) | 1/4" Bottom | 1/4" Back (LB) | 1/4" Bottom | 1/4" Back (LB) | 1/4" Bottom | 1/4" Back (LB) |
| Socket, Tube | | Brass | | SS | | Brass | | SS | |
| 0/15 psi | 22 psi | PDT8051 | PDT8051B | PDT8061 | PDT8061B | PDT8071 | PDT8071B | PDT8081 | PDT8081B |
| 0/30 psi | 45 psi | PDT8052 | PDT8052B | PDT8062 | PDT8062B | PDT8072 | PDT8072B | PDT8082 | PDT8082B |
| 0/60 psi | 90 psi | PDT8053 | PDT8053B | PDT8063 | PDT8063B | PDT8073 | PDT8073B | PDT8083 | PDT8083B |
| 0/100 psi | 150 psi | PDT8054 | PDT8054B | PDT8064 | PDT8064B | PDT8074 | PDT8074B | PDT8084 | PDT8084B |
| 0/160 psi | 240 psi | PDT8055 | PDT8055B | PDT8065 | PDT8065B | PDT8075 | PDT8075B | PDT8085 | PDT8085B |
| 0/200 psi | 300 psi | PDT8056 | PDT8056B | PDT8066 | PDT8066B | PDT8076 | PDT8076B | PDT8086 | PDT8086B |
| 0/300 psi | 450 psi | PDT8057 | PDT8057B | PDT8067 | PDT8067B | PDT8077 | PDT8077B | PDT8087 | PDT8087B |
| 0/600 psi | 900 psi | PDT8058 | PDT8058B | PDT8068 | PDT8068B | PDT8078 | PDT8078B | PDT8088 | PDT8088B |

Other ranges and connection sizes available upon request. For scale change, refer to How to Order Guide for scale codes. Bi-directional or zero positioned at 12 o'clock on dial is available. Low Differential Pressure/High Static Pressure gauges are also available (PPD, PRD, PSD and PVD Series').

### 4.5" Bottom Connection

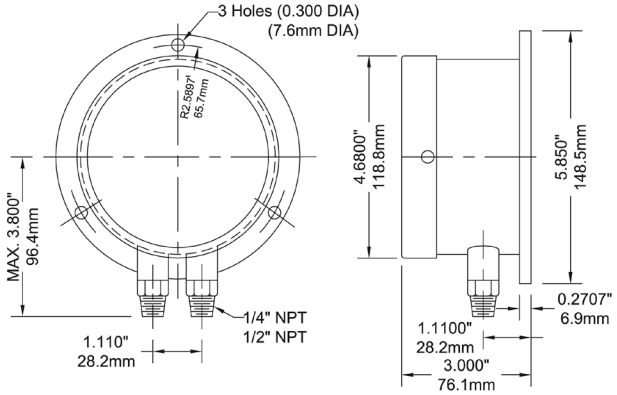


### 4.5" Back Connection

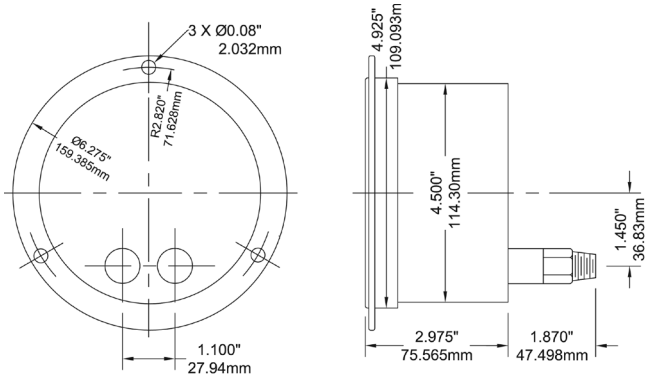


### 6" Bottom Connection

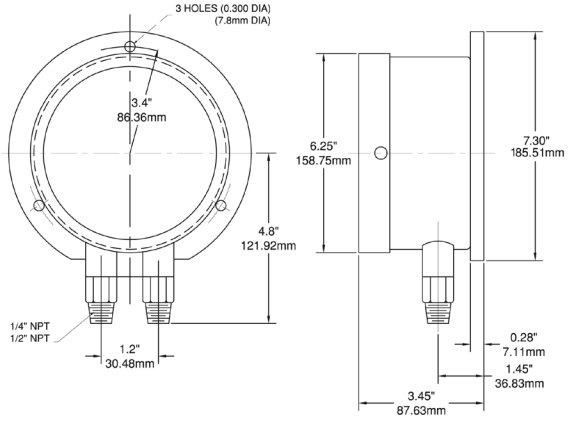


### 6" Back Connection

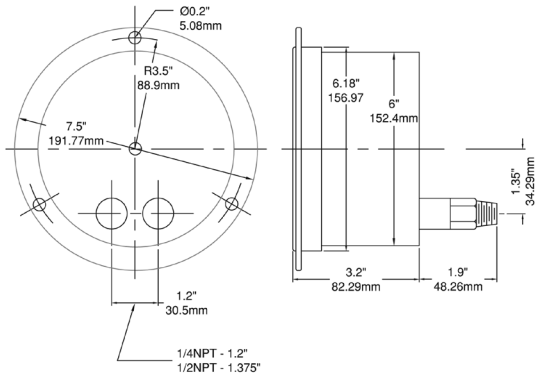

# PDX Duplex Gauge




## Description & Features:

- Heavy duty, highly accurate, aluminum case
- Brass and stainless steel wetted parts available
- Two separate bourdon tubes and pointers
- One red and one black pointer
- ASME B40.100 compliant
- CRN registered
- 5 year warranty

## Applications:

- Comparing two separate process pressures on the same gauge
- Utilized on pump and filter installations

| Specifications | Stainless Steel | Brass |
|---|---|---|
| **Dial** | 4.5” (115mm), 6” (150mm) white aluminum with black markings | 4.5” (115mm), 6” (150mm) white aluminum with black markings |
| **Case** | Aluminum, painted black | Aluminum, painted black |
| **Front Flange** | SS | SS |
| **Back Flange** | Black steel | Black steel |
| **Lens** | Glass | Glass |
| **Ring** | 4.5” (115mm): SS<br>6” (150mm): Aluminum | 4.5” (115mm): SS<br>6” (150mm): Aluminum |
| **Socket** | 316 SS | Brass |
| **Connections** | 1/4” NPT standard | 1/4” NPT standard |
| **Scale** | PSI only | PSI only |
| **Bourdon Tubes** | AISI 316 SS, independent, matched | Phosphor bronze, independent, matched |
| **Movement** | Brass | Brass |
| **Pointer** | Aluminum, micrometer | Aluminum, micrometer |
| **Welding** | TIG argonarc | Tin/copper alloy |
| **Over-pressure Limit** | 30% of full scale value | 30% of full scale value |
| **Working Pressure** | Maximum 75% of full scale value | Maximum 75% of full scale value |
| **Ambient/Process Temperature** | -40°F to 150°F (-40°C to 65°C) | -40°F to 150°F (-40°C to 65°C) |
| **Accuracy** | ±1% ANSI/ASME Grade 1A | ±1% ANSI/ASME Grade 1A |
| **Warning (brass internals only)** | N/A | ⚠ **WARNING:** This product can expose you to chemicals including lead, which is known to the State of California to cause cancer and birth defects or other reproductive harm. For more information go to www.P65Warnings.ca.gov. |

# PDX Duplex Gauge

## Order Codes

| Dial Size | 4.5” (115mm) | | | | 6” (150mm) | | | |
|---|---|---|---|---|---|---|---|---|
| Connection | 1/4” Bottom | 1/4” Back (LB) | 1/4” Bottom | 1/4” Back (LB) | 1/4” Bottom | 1/4” Back (LB) | 1/4” Bottom | 1/4” Back (LB) |
| Socket, Tube | Brass | | SS | | Brass | | SS | |
| 0/15 psi | PDX8011 | PDX8011B | PDX8021 | PDX8021B | PDX8091 | PDX8091B | PDX8101 | PDX8101B |
| 0/30 psi | PDX8012 | PDX8012B | PDX8022 | PDX8022B | PDX8092 | PDX8092B | PDX8102 | PDX8102B |
| 0/60 psi | PDX8013 | PDX8013B | PDX8023 | PDX8023B | PDX8093 | PDX8093B | PDX8103 | PDX8103B |
| 0/100 psi | PDX8014 | PDX8014B | PDX8024 | PDX8024B | PDX8094 | PDX8094B | PDX8104 | PDX8104B |
| 0/160 psi | PDX8015 | PDX8015B | PDX8025 | PDX8025B | PDX8095 | PDX8095B | PDX8105 | PDX8105B |
| 0/200 psi | PDX8016 | PDX8016B | PDX8026 | PDX8026B | PDX8096 | PDX8096B | PDX8106 | PDX8106B |
| 0/300 psi | PDX8017 | PDX8017B | PDX8027 | PDX8027B | PDX8097 | PDX8097B | PDX8107 | PDX8107B |
| 0/600 psi | PDX8018 | PDX8018B | PDX8028 | PDX8028B | PDX8098 | PDX8098B | PDX8109 | PDX8109B |

Other ranges and connection sizes available upon request. For scale change, refer to How to Order Guide for scale codes.

### 4.5” Bottom Connection

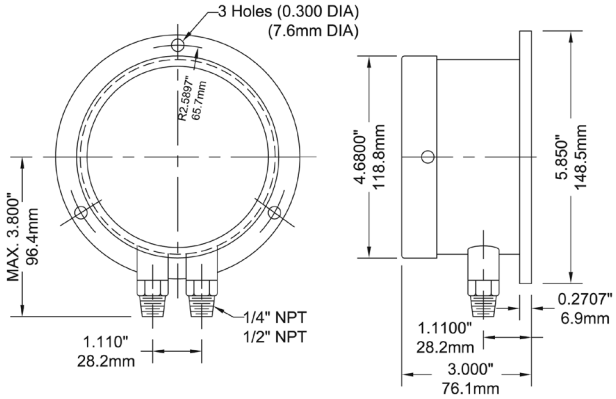


### 4.5” Back Connection

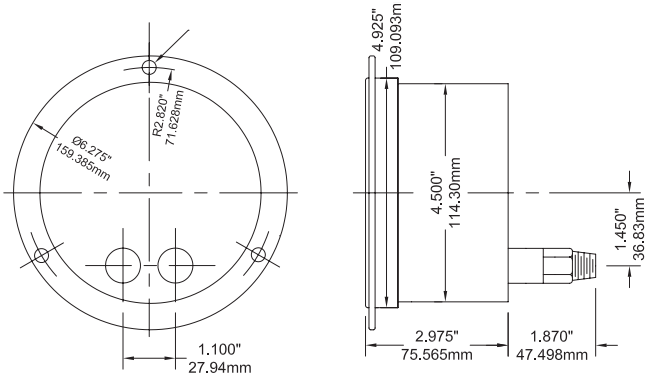

# PFD WinAIR Differential Gauge




## Description & Features:

- Resistance-free differential gauge for all air and non-corrosive gas installations
- Industrial grade die-cast aluminum case
- Extreme temperature tolerance with o-ring seal
- Easily accessible re-zero adjustment screw
- 2% full scale accuracy*
- 3 mounting adapters with screws included, other mounting accessories also available
- 5 year warranty

## Applications:

- Low pressure and differential monitoring for air and non-combustible gases including filters, blowers, vacuums, air handlers and clean rooms

| Specifications | |
|---|---|
| **Dial** | 4” (100mm), white aluminum with black markings |
| **Case** | Die-cast black aluminum |
| **Lens** | Polycarbonate lens with UV protection |
| **Ring** | Threaded die-cast black aluminum |
| **Connection** | 1/8” NPTF high & low pressure taps, side & back |
| **Movement** | Resistance-free and magnetic |
| **Pointer** | Aluminum, anodized black |
| **Over-pressure Limit** | Maximum pressure of 14.5 psi / 100 kPa |
| **Ambient/Process Temperature** | -40°F to 140°F (-40°C to 60°C)<br>14°F to 140°F (-10°C to 60°C) |
| **Accuracy** | ±2% of full scale value* |
| **Enclosure Rating** | IP67 |
| **Warning** | ⚠ **WARNING:** This product can expose you to chemicals including lead, which is known to the State of California to cause cancer and birth defects or other reproductive harm. For more information go to www.P65Warnings.ca.gov. |

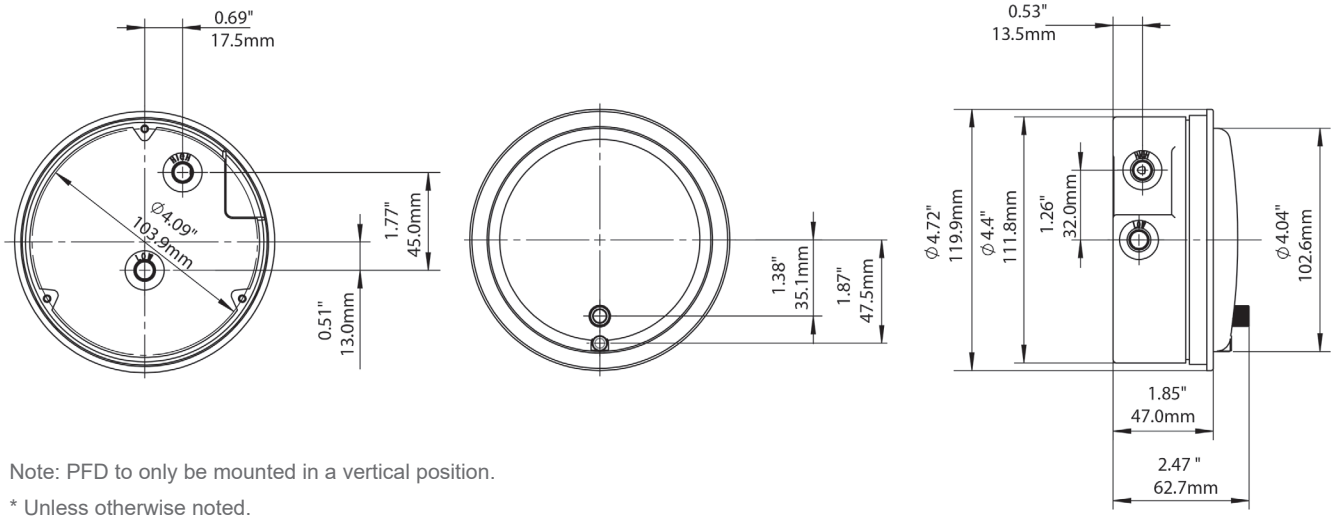


Note: PFD to only be mounted in a vertical position.

* Unless otherwise noted.

# PFD WinAIR Differential Gauge

## "H2O Order Codes (products in bold are normally stock in North America)

| Dial Size | 4" (100mm) |
|---|---|
| Connection | 1/8" Side & Back |
| Case Material | Aluminum |
| -0.25/0/0.25 "H2O | PFD40100▪ |
| -0.5/0/0.5 "H2O | PFD40101 |
| -1/0/1 "H2O | PFD40102 |
| -2/0/2 "H2O | PFD40103 |
| -5/0/5 "H2O | PFD40104 |
| -10/0/10 "H2O | PFD40105 |
| -15/0/15 "H2O | PFD40106 |
| 0/0.25 "H2O | PFD40010▲ |
| 0/0.5 "H2O | PFD40011▪ |
| 0/1 "H2O | **PFD40012** |
| 0/2 "H2O | PFD40013 |
| 0/3 "H2O | **PFD40014** |
| 0/4 "H2O | PFD40015 |
| 0/5 "H2O | PFD40016 |
| 0/6 "H2O | PFD40017 |
| 0/8 "H2O | PFD40018 |
| 0/10 "H2O | PFD40019 |
| 0/12 "H2O | PFD40020 |
| 0/15 "H2O | PFD40021 |
| 0/20 "H2O | PFD40022 |
| 0/25 "H2O | PFD40023 |
| 0/30 "H2O | **PFD40024** |
| 0/40 "H2O | PFD40025 |
| 0/50 "H2O | PFD40026 |
| 0/60 "H2O | PFD40027 |
| 0/80 "H2O | PFD40028 |
| 0/100 "H2O | PFD40029 |
| 0/120 "H2O | PFD40030 |
| 0/150 "H2O | PFD40031 |

Note: Max. pressure rating is 14.5 psi

## mmH2O Order Codes

| Dial Size | 4" (100mm) |
|---|---|
| Connection | 1/8" Side & Back |
| Case Material | Aluminum |
| -3/0/3 mmH2O | PFD40350▲ |
| -5/0/5 mmH2O | PFD40351▪ |
| -10/0/10 mmH2O | PFD40352 |
| 0/6 mmH2O | PFD40300▲ |
| 0/10 mmH2O | PFD40301▪ |
| 0/15 mmH2O | PFD40302 |
| 0/20 mmH2O | PFD40303 |
| 0/25 mmH2O | PFD40304 |
| 0/30 mmH2O | PFD40305 |
| 0/50 mmH2O | PFD40306 |
| 0/80 mmH2O | PFD40307 |
| 0/100 mmH2O | PFD40308 |
| 0/125 mmH2O | PFD40309 |
| 0/150 mmH2O | PFD40310 |
| 0/200 mmH2O | PFD40311 |
| 0/250 mmH2O | PFD40312 |
| 0/300 mmH2O | PFD40313 |



RSP - Setpoint indicator

## kPa Order Codes

| Dial Size | 4" (100mm) |
|---|---|
| Connection | 1/8" Side & Back |
| Case Material | Aluminum |
| 0/0.5 kPa | PFD40500 |
| 0/1 kPa | PFD40501 |
| 0/1.5 kPa | PFD40502 |
| 0/2 kPa | PFD40503 |
| 0/2.5 kPa | PFD40504 |
| 0/3 kPa | PFD40505 |
| 0/4 kPa | PFD40506 |
| 0/5 kPa | PFD40507 |
| 0/6 kPa | PFD40508 |
| 0/8 kPa | PFD40509 |
| 0/10 kPa | PFD40510 |
| 0/15 kPa | PFD40511 |
| 0/20 kPa | PFD40512 |
| 0/25 kPa | PFD40513 |
| 0/30 kPa | PFD40514 |

## PSI Order Codes (products in bold are normally stock in North America)

| Dial Size | 4" (100mm) |
|---|---|
| Connection | 1/8" Side & Back |
| Case Material | Aluminum |
| 0/1 psi | PFD40150 |
| 0/2 psi | **PFD40151** |
| 0/3 psi | PFD40152 |
| 0/4 psi | PFD40153 |
| 0/5 psi | PFD40154 |

## PA Order Codes (products in bold are normally stock in North America)

| Dial Size | 4" (100mm) |
|---|---|
| Connection | 1/8" Side & Back |
| Case Material | Aluminum |
| -50/0/50 PA | PFD40200▲ |
| -60/0/60 PA | PFD40201▲ |
| -100/0/100 PA | PFD40202▪ |
| -125/0/125 PA | PFD40403▪ |
| -150/0/150 PA | PFD40404 |
| -200/0/200 PA | PFD40405 |
| -250/0/250 PA | PFD40406 |
| -300/0/300 PA | PFD40407 |
| -500/0/500 PA | PFD40408 |
| 0/50 PA | PFD40210▲ |
| 0/60 PA | PFD40211▲ |
| 0/100 PA | PFD40212▪ |
| 0/125 PA | PFD40213▪ |
| 0/150 PA | PFD40214▪ |
| 0/200 PA | PFD40215 |
| 0/250 PA | PFD40216 |
| 0/300 PA | PFD40217 |
| 0/500 PA | PFD40218 |
| 0/750 PA | PFD40219 |
| 0/1,000 PA | PFD40220 |

Other ranges and connection sizes available upon request. For scale change, refer to How to Order Guide for scale codes.

**For options, attach suffix to end of order code: i.e. PFD40031-RSP for SETPOINT INDICATOR. Contact Winters for additional options**

**Option suffix:**

RSP = Setpoint indicator (IP54 rated)

▪ ±3% of full scale value accuracy
▲ ±4% of full scale value accuracy

## Options Order Codes

| Description | Code |
|---|---|
| Hanging Bracket | PFD1001 |
| Surface Mounting Bracket | PFD1002 |
| 3-Way Valve | PFD1003 |
| Flush Mounting Bracket | PFD1004 |
| Air Filter Kit | PFD1005 |
| 2" Pipe Mounting Kit | PFD1006 |
| Flange for Panel Mounting | PFD1007 |
| Square Flush Mount Kit | PFD1008 |

| Description | Code |
|---|---|
| Static Tip | PFD1009 |
| Plastic Tubing 25M | PFD1010 |
| Plastic Tubing 50M | PFD1011 |
| Plastic Tubing 100M | PFD1012 |
| Plastic Tubing 200M | PFD1013 |
| Surface Mounting Bracket (Plastic) | PFD1016 |

# PFD WinAIR Compact Differential Gauge




## Description & Features:

- Resistance-free differential gauge for all air and non-corrosive gas installations
- Compact size and easy to read dial
- Industrial grade nylon case
- Easily accessible re-zero adjustment screw
- 5% full scale accuracy
- Mounting bracket with screws included
- 5 year warranty

## Applications:

- Low pressure and differential monitoring for air and non-combustible gases including filters, blowers, vacuums, air handlers and clean rooms

| Specifications | |
|---|---|
| **Dial** | 2 1/16” (52.4mm), white aluminum with black markings |
| **Case** | Glass filled nylon, black |
| **Lens** | Polycarbonate |
| **Ring** | Threaded die-cast black aluminum |
| **Process Connections** | 3/16" barbed for ID tubing |
| **Movement** | Resistance-free and magnetic |
| **Pointer** | Aluminum, anodized black |
| **Over-pressure Limit** | Maximum pressure of 30 psi / 207 kPa |
| **Ambient/Process Temperatures** | 20°F to 120°F (-7°C to 49°C) |
| **Accuracy** | ± 5% of full scale |
| **Approvals** | CE |
| **Accessories** | Panel mounting bracket, allen key, two nuts & bolts |
| **Installation Attention** | Only in vertical position |
| **Warning** | This product can expose you to chemicals including lead, which is known to the State of California to cause cancer and birth defects or other reproductive harm. For more information go to www.P65Warnings.ca.gov |

# PFD WinAIR Compact Differential Gauge

## Order Codes

| Pressure Range | | | |
|---|---|---|---|
| Pa | | $inH_2O$ | |
| 0- 125 | PFD20213 | 0 - 0.5 | PFD20011 |
| 0 - 250 | PFD20216 | 0 - 1.0 | PFD20012 |
| 0 - 300 | PFD20217 | 0 - 2.0 | PFD20013 |
| 0 - 500 | PFD20218 | 0 - 3.0 | PFD20014 |
| 0 - 750 | PFD20219 | 0 - 5.0 | PFD20016 |
| | | 0 - 10.0 | PFD20019 |

## Optional Order Codes

| Static Pressure tip with Flange | PVC Tubing, 20m (65') |
|---|---|
| WPS1010 | WPS1020 |





## Dimensions (mm)

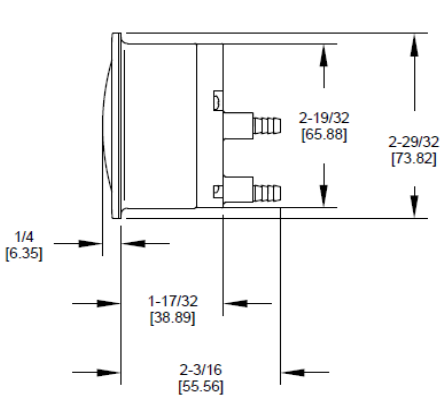


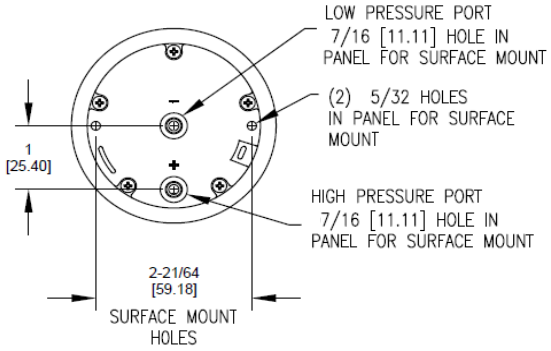


Note: PFD to only be mounted in a vertical position.

* Unless otherwise noted.

# PPD, PRD PSD, PVD High Static Pressure Differential Gauges




## Description & Features:

- Versatile high static low differential pressure gauges
- Four types of sensing elements for a large variety of ranges
- Switches available for actuation
- ASME B40.100 compliant
- IP65 enclosure rating
- 5 year warranty

## Applications:

- Filtration systems, low pressure gas installations, leak detection in low pressure, high static systems

| Specifications | Piston Gauge (PPD) | Rolling Diaphragm Gauge (PRD) | Small Convoluted Diaphragm Gauge (PSD) | Convoluted Diaphragm Gauge (PVD) |
|---|---|---|---|---|
| Product Application | Open system - NO diagphragms | Open system - NO diaphragms | Closed system - YES may be installed with diaphragm seals | Open system - NO diaphragms |
| Dial | 3.5” (90mm), | 2.5” (63mm) | 2.5” (63mm), 3.5” (90mm), 4.5” (115mm) | 3.5” (90mm), 4.5” (115mm) |
| Case | 4.5” (115mm) | Engineered plastic | Aluminum or engineered plastic | Aluminum or engineered plastic |
| Lens | Shatter resistant acrylic (standard), safety glass (optional) | Shatter resistant acrylic (standard), safety glass (optional) | Shatter resistant acrylic (standard), safety glass (optional) | Shatter resistant acrylic (standard), safety glass (optional) |
| Line Connection Locations | In-line, back or bottom | In-line (only) | In-line, back, dual top & bottom or bottom | Dual top & bottom |
| Connections | 1/4” NPTF (standard), 1/2” NPTF, 7/16”-20 SAE | 1/4” NPTF (only) | 1/4” NPTF (standard), 1/2” NPTF, 7/16”-20 SAE | Dual 1/4” NPTF |
| Wetted Parts Materials | SS piston with ceramic magnet (standard), Aluminum, Bronze or Monel® piston (optional) | SS parts with Buna N seals | SS parts with Buna N seals | SS parts with Buna N seals (standard), Hastelloy® C parts with Buna N seals (optional) |
| Body Material | SS, aluminum, bronze or Monel® | SS, aluminum or acetal | SS, aluminum or brass | SS, aluminum, brass, engineered plastic or Hastelloy® C |
| Internals/Movement | Magnetic coupling using piston & spring | Magnetic coupling with rolling diaphragm sensor | Magnetic coupling with convoluted diaphragm sensor | Magnetic coupling with convoluted diaphragm sensor |
| Migration of Media | Marginal | Zero | Zero | Zero |
| Seal | Buna N (standard), PTFE, FKM, neoprene | Buna N (standard), FKM | Buna N (standard), FKM, silicone, neoprene | Buna N (standard), FKM, silicone, neoprene |
| Standard Differential Ranges | 0-5 thru 110 psid (0.4-8 bar) | 0-5 thru 50 psid (0.4-3 bar) | 0-25 thru 100 psid (1.5-7 bar) | 0-5 thru 400” $H_2O$ (12.4 mbar-1 bar) |
| Maximum System Pressure | Aluminum: 3,000 psi (200 bar) Bronze, Monel®: 5,000 psi (350 bar) SS: 6,000 psi (400 bar)* *CRN not available | Aluminum, SS: 1,000 psi (70 bar) Acetal: 500 psi (35 bar) | Aluminum, SS: 3,000 psi (200 bar) Brass: 1,500 psi (100 bar) | Aluminum, brass, SS: 500 psi (35 bar) Engineered plastic: 300 psi (20 bar) Hastelloy® C: 500 psi (35 bar) |
| Ambient Temperature | -40°F to 200°F (-40°C to 93°C) | -40°F to 200°F (-40°C to 93°C) | -40°F to 200°F (-40°C to 93°C) | -40°F to 200°F (-40°C to 93°C) |
| Accuracy | +/-3-2-3% (ASME B40.100 Grade B) | ±5% of full scale value | ±2% of full scale value | 0-5 thru 9.9” $H_2O$: ±5% of full scale 0-10 thru 400” $H_2O$: ±2% of full scale |
| Warning (brass internals only) | N/A | N/A | ⚠ **WARNING:** This product can expose you to chemicals including lead, which is known to the State of California to cause cancer and birth defects or other reproductive harm. For more information go to www.P65Warnings.ca.gov. | |



Hastelloy® is a registered trademark of Haynes International, Inc.
Monel® is a registered trademark of Inco Alloys International

# High Static Pressure Differential Gauges



## Piston Type (PPD)

- Most suitable for general purpose applications including filters, pumps and chillers. Uses a piston as a sensor to separate high & low pressure in response to pressure differentiation.
- Standard Differential Range: 0/5 thru 110 psid (0.4/8 bar)
- Maximum System Pressure Aluminum: 3,000 psi (200 bar)
- Maximum System Pressure Bronze, Monel®: 3,000 psi (200 bar)
- Maximum System Pressure SS: 6,000 psi (400 bar)
- Accuracy: +/-3-2-3% (ASME B40.100 Grade B)

## Rolling Diaphragm Gauge (PRD)

- Operates on rolling diaphragm as a sensor, which assures complete separation of the high and low pressure ports. Suitable for use on dissimilar fluids, wet gas and process fluids with particulates present. Used in high line pressure and differential pressure ranges up to 50 psid.
- Standard Differential Range: 0/5 thru 50 psid (0.4/3 bar)
- Maximum System Pressure Aluminum, SS: 1,000 psi (70 bar)
- Maximum System Pressure Acetal: 500 psi (35 bar)
- Accuracy ±5% full scale ascending

## Small Convoluted Diaphragm Gauge (PSD)

- Operates on a convoluted diaphragm as a sensor which separates high and low pressure ports. Ideally suited for use on dissimilar fluids and wet gas or fluids with high concentration of particles.
- Suitable for closed loop system applications, such as diaphragm with capillaries. Closed loop system refers to a differential pressure gauge with both process ports connected to diaphragms via capillaries
- For diaphragm seal assembly applications, request Winters PSD series with special application code Z10
- Standard Differential Range: 0/25 thru 100 psid (1.5/7 bar)
- Maximum System Pressure Aluminum, SS: 3,000 psi (200 bar)
- Maximum System Pressure Brass: 1,500 psi (100 bar)
- Accuracy ±2% full scale ascending

## Convoluted Diaphragm Gauge (PVD)

- Operates on a convoluted diaphragm sensor for low range flow, liquid and vacuum applications. Used in tank level, horizontal or vertical flow applications, filtering of very low pressure gases.
- Standard Differential Range: 0/5 thru 400" $H_2O$ (12.4 mbar/1 bar)
- Maximum System Pressure Aluminum, brass, SS: 500 psi (35 bar)
- Maximum System Pressure Engineered plastic: 300 psi (20 bar)
- Maximum System Pressure Hastelloy® C: 500 psi (35 bar)
- Accuracy 0/5 thru 9.9" $H_2O$ ±5%, 0/10 thru 400" $H_2O$ ±2%

Note: Technical drawings are available upon request

# PPD Piston Gauge (High Static Pressure Differential)

## Series Number (for custom, non-standard product)

P P D - [ ] - [ ] - [ ] - [ ] - [ ] - [ ] - [ ] - [ ] [ ] [ ]

| | | |
|---|---|---|
| **SERIES TYPE** | Aluminum body / Stainless Steel piston (Max system pressure 3,000 psi) | A |
| | 316 Stainless Steel body / Stainless Steel piston (Max system pressure 6,000 psi) | S |
| | Monel body / Monel piston, 5% accuracy (Max system pressure 5,000 psi) | M |
| | -> available differential ranges 0/10,15,20,25,30 only) | |
| | Aluminum Bronze body / Aluminum Bronze piston, 5% accuracy (Max system pressure 5,000 psi) | N |
| | -> available differential ranges 0/10,15,20,25,30 only) | |
| | Special | Z |
| **DIAL SIZE** | 2.5" Round Uni-directional dial, plastic case (standard) | A |
| | 4.5" Round Uni-directional dial, plastic case | C |
| | 4.5" Round Bi-directional dial, plastic case | D |
| | 3.5" Round Uni-directional dial, aluminum case | E |
| | 4.5" Round Uni-directional dial, aluminum case | G |
| | 4.5" Round Bi-directional dial, aluminum case | H |
| | Special | Z |
| **SEAL** | Buna-N (standard) | 0 |
| | Viton | 1 |
| | Neoprene | 2 |
| | PTFE | 4 |
| | Ethylene Propylene | 5 |
| | Special | Z |
| **CONNECTION** | 1/4" NPTF Back (standard), not available with Gauge Options M & N | 0 |
| | 1/4" NPTF End / In-line | 2 |
| | 1/4" NPTF Bottom, not available with Gauge Options M & N | 3 |
| | 1/2" NPTF End | 4 |
| | 7/16"-20 SAE with "O" ring Back, with Gauge Options A & S | 6 |
| | Special | Z |
| **OPTIONS** | No additional options required (standard) | O |
| | Reversed High / Low process connections | A |
| | Mounting Holes in gauge body for field mounting (switch options A & B only) | C |
| | Mounting Holes in gauge body for field mounting (switch options L & M only) | D |
| | Two (2) 1/4 - 20 mounting holes (not available for C & D switch options) | E |
| | Carbon steel 2" pipe mounting kit (not available for C & D switch options) | F |
| | Stainless steel 2" pipe mounting kit (not available for C & D switch options) | G |
| | 1/2" NPTF stainless steel adapters | K |
| | Glycerin filled 2.5" case (not available with Safety glass or Maxi-pointer) | L |
| | Glycerin filled 4.5" case (not available with Safety glass or Maxi-pointer) | L |
| | Maxi-pointer 2.5" case (not available with Safety glass) | M |
| | Maxi-pointer 4.5" case (not available with Safety glass) | M |
| | NACE (for sour gas applications, not available in Bronze case) | N |
| | CRN (Canadian Registration Number, aluminum or SS body only) | Q |
| | Safety glass (4.5" aluminum case only) | S |
| | Oxygen cleaning | T |
| | Stainless steel tag with SS wire | U |
| | Stainless steel tag with SS screw | V |
| | Wall mount kit (not available with Back Connections or C & D electrical options) | W |
| | Special | Z |
| **SWITCH** | No electrical options required (standard) | O |
| | 1 switch in standard enclosure with grommet wire seal | A |
| | 2 switches in standard enclosure with grommet wire seal | B |
| | 1 switch in standard enclosure with 1/4" NPTF electrical connection & NEMA 4X | C |
| | 2 switches in standard enclosure with 1/4" NPTF electrical connection & NEMA 4X | D |
| | 1 switch and Differential pressure gauge in NEMA 4X plastic enclosure (not available with End connections) | G |
| | 2 switch and Differential pressure gauge in NEMA 4X plastic enclosure (not available with End connections) | H |
| | 1 switch in standard enclosure with DIN plug connector (DIN43650 IP65) | L |
| | 2 switches in standard enclosure with DIN plug connector (DIN43650 IP65) | M |
| | Special | Z |
| **ELECTRICAL** | No electrical options required (standard) | O |
| | SPDT 3W, 0.25A 125VAC / VDC, adjustable range 10-90% | A |
| | SPDT 60W, 3.0A 240VAC / VDC, Normally open, adjustable range 25-95% | E |
| | SPDT 60W, 3.0A 240VAC / VDC, Normally closed, adjustable range 25-95% | F |
| | SPDT 60W, 3.0A 240VAC / VDC, 1 x Normally open 1 x Normally closed, adjustable range 25-95% | G |
| | SPDT 60W, 1.0A 240VAC / VDC, adjustable range 25-100 (price per switch) | H |
| | Special | Z |
| **DIFF. RANGE** | Minimum differential range 0/5psid (example) - Maximum differential range 0/110psid - Maximum system pressure of 3,000 or 5,000 or 6,000psi (based on above) | 0 0 5 psid |

# PRD Rolling Diaphragm Gauge (High Static Pressure Differential)

## Series Number (for custom, non-standard product)




| | | |
|---|---|---|
| **SERIES** | | |
| **TYPE** | Aluminum body / Stainless steel, Ceramic & Acetal moving components (Max system pressure 1,000 psi) | A |
| | Acetal (plastic) body / Stainless steel, Ceramic & Acetal moving components (Max system pressure 500 psi) | P |
| | Stainless steel body / Stainless steel, Ceramic & Acetal moving components (Max system pressure 1,000 psi) | S |
| | Special | Z |
| **DIAL SIZE** | 2.5" Round Uni-directional dial, plastic case (standard) | A |
| | Special | Z |
| **SEAL** | Buna-N (standard) | 0 |
| | FKM | 1 |
| | Special | Z |
| **CONNECTION** | 1/4" NPTF End / In-line (standard) | 2 |
| | Special | Z |
| **OPTIONS** | Two (2) 10-32 mounting holes, spaced 1.75" apart x 0.330" deep | E |
| | Special | Z |
| **SWITCH** | No electrical options required (standard) | O |
| | 1 switch in standard enclosure with DIN plug connector (DIN43650 IP65), NENA 4X | L |
| | Special | Z |
| **ELECTRICAL** | No electrical options required (standard) | O |
| | SPDT 60W, 3.0A 240VAC / VDC, Normally open, adjustable range 40-95% | E |
| | Special | Z |

Minimum differential range 0/5psid (example) - Maximum differential range 0/50psid - Maximum system pressure of 500psi or 1,000psi (based on above)

0 0 5 psid

# PSD Small Convoluted Diaphragm Gauge (High Static Pressure Differential)

## Series Number (for custom, non-standard product)

P S D - ☐ - ☐ - ☐ - ☐ - ☐ - ☐ - ☐ - ☐ ☐ ☐ - ☐ ☐

| | | |
|---|---|---|
| **SERIES TYPE** | Aluminum body / Stainless Steel internal parts, Buna-N diaphragm & seals, PTFE guide bushings, 1/4" NPTF back connections & engineered plastic gauge case (Max system pressure 3,000 psi) | A |
| | Brass body / Stainless Steel internal parts, Buna-N diaphragm & seals, PTFE guide bushings, 1/4" NPTF back connections & engineered plastic gauge case (Max system pressure 1,500 psi) | B |
| | Stainless steel body / Stainless steel internal parts, Buna-N diaphragm & seals, PTFE guide bushings, 1/4" NPTF back connections & engineered plastic gauge case (Max system pressure 3,000 psi) | S |
| | Special | Z |
| **DIAL SIZE** | 2.5" Round (standard) | A |
| | 4.5" Round | C |
| | 3.5" Round anodized aluminum case | E |
| | 4.5" Round anodized aluminum case | G |
| | Special | Z |
| **SEAL** | Buna-N (standard) | 0 |
| | Viton | 1 |
| | Silicone | 2 |
| | Ethylene Propylene | 5 |
| | Special | Z |
| **CONNECTION** | 1/4" NPTF Back connections (standard) | 0 |
| | 1/4" NPTF top & bottom connections (non-electrical option units only) | 2 |
| | 1/4" NPTF Bottom connections | 3 |
| | 7/16"-20 SAE straight thread O-ring (back connections) | 4 |
| | 1/2" NPTF End / In-line connections (Max system pressure 2,000 psi) | 7 |
| | 1/2" NPTF End / In-line connections (Max system pressure 2,000 psi) | 8 |
| | Special | Z |
| **OPTIONS** | No additional options required (standard) | O |
| | Reversed High / Low process connections, not available with switch options T & W | A |
| | Two (2) 1/4 - 20 mounting holes | E |
| | Carbon steel 2" pipe mounting kit (not available for reversed port switch option) | F |
| | Stainless steel 2" pipe mounting kit (not available for reversed port switch option) | G |
| | 1/2" NPTF stainless steel adapters (not available with End / In-line connections) | K |
| | Glycerin filled 2.5" case (not available with Safety glass or Maxi-pointer) | L |
| | Glycerin filled 4.5" case (not available with Safety glass or Maxi-pointer) | L |
| | Maxi-pointer 2.5" case (not available with Safety glass) | M |
| | Maxi-pointer 4.5" case (not available with Safety glass) | M |
| | NACE (for sour gas applications, available in Aluminum or SS body only) | N |
| | CRN (Canadian Registration Number, available in Aluminum or SS body only) | Q |
| | Safety glass (4.5" aluminum case only) | S |
| | Oxygen cleaning | T |
| | Stainless steel tag with SS wire | U |
| | Stainless steel tag with SS screw | V |
| | Wall mount kit | W |
| | Diaphragm seal assembly | X |
| | Special | Z |
| **SWITCH** | No electrical options required (standard) | O |
| | 1 Reed switch in NEMA 4X / IP66 enclosure | A |
| | 2 Reed switches in NEMA 4X / IP66 enclosure | B |
| | 4/20mA transmitter in NEMA 4X / IP66 enclosure | T |
| | Special | Z |
| **ELECTRICAL** | No electrical options required (standard) | O |
| | SPDT 3W, 0.25A 125VAC / VDC | A |
| | SPDT 25W, 0.5A 230VAC / VDC, Normally open | B |
| | 4/20mA transmitter, 8/28 VDC loop power, 2% accuracy ascending from 20-100% of scale | T |
| | Special | Z |
| | Minimum differential range 0/25psid (example) - Maximum differential range 0/100psid - Maximum system pressure of 3,000 or 1,500psi (based on above) | 0 2 5 psid |
| **SPECIAL APPLICATIONS** | PSD assembled with capallaries and diaphragm seals | Z X |
| | Other | 1 X |
| | | 0 X |

# PVD Convoluted Diaphragm Gauge (High Static Pressure Differential)

## Series Number (for custom, non-standard product)

P V D - [ ][ ] - [ ] - [ ] - [ ] - [ ] - [ ] - [ ] - [ ] - [ ][ ][ ]

| | | |
|---|---|---|
| **SERIES TYPE** | Stainless Steel internal metal parts (Max system pressure 300 psi)<br>glass reinforced engineered plastic body, two x 1/4" carbon steel compression fittings | P C |
| | Aluminum body, stainless Steel internal metal parts (Max system pressure 500 psi)<br>dual 1/4" NPTF connections top & bottom | A C |
| | Brass body, stainless Steel internal metal parts (Max system pressure 500 psi)<br>dual 1/4" NPTF connections top & bottom | B C |
| | Stainless steel body, stainless Steel internal metal parts (Max system pressure 500 psi)<br>dual 1/4" NPTF connections top & bottom | S C |
| | Hastelloy-C body, Hastelloy-C internal metal parts (Max system pressure 500 psi)<br>dual 1/4" NPTF connections top & bottom (+/- 5% ascending accuracy) | H C |
| **DIAL SIZE** | 4.5" Round dial, plastic case | C |
| | 3.5" Round dial, anodized aluminum case | E |
| | 4.5" Round dial, anodized aluminum case | G |
| | Special | Z |
| **SEAL** | Buna-N (standard) | 0 |
| | FKM 0/20"H2O to 0/400"H2O | 1 |
| | Silicone 0/5"H2O to 0/100"H2O | 2 |
| | Neoprene 0/5"H2O to 0/100"H2O | 3 |
| | Ethylene Propylene 0/20"H2O to 0/400"H2O | 5 |
| | Special | Z |
| **CONNECTION** | 1/4" carbon steel compression tube fittings (2) for above model P or<br>1/4" NPTF (4) for above models A, B or S | 0 |
| | 1/4" stainless steel compression tube fittings (2) | 1 |
| | 1/4" NPTF brass adapters (2) for above model P only | 2 |
| | 1/4" NPTF stainless steel adapters (2) for above model P only | 3 |
| | Special | Z |
| **OPTIONS** | No additional options required (standard) | O |
| | Drain & bleed plugs, stainless steel (2), above model P only | B |
| | Drain & bleed in NEMA 4X enclosure | D |
| | Pipe mounting kit, carbon steel | F |
| | Pipe mounting kit, stainless steel | G |
| | Hastelloy-C internal wetted metal parts and fittings, poly body only | H |
| | 1/2" NPTF stainless steel adapters (2), available on above models A, B & S only | K |
| | Maxi-pointer | M |
| | NACE (for sour gas applications, not available in Bronze case) | N |
| | CRN (Canadian Registration Number, aluminum or SS body only) | Q |
| | Safety glass (4.5" aluminum case only) | S |
| | Oxygen cleaning | T |
| | Stainless steel tag with SS wire | U |
| | Stainless steel tag with SS screw | V |
| | Wall mount kit (not available with Switches) | W |
| | Special | Z |
| **SWITCH** | No electrical options required (standard) | O |
| | 1 Reed switch with condulet enclosure | H |
| | 2 Reed switches with condulet enclosure | I |
| | 1 Reed switch with condulet enclosure and plug-in connector (DIN 43650) | J |
| | 2 Reed switches with condulet enclosure and plug-in connector (DIN 43650) | K |
| | 1 switch in NEMA 4X plastic enclosure | L |
| | 2 switches in NEMA 4X plastic enclosure | M |
| | Special | Z |
| **ELECTRICAL** | No electrical options required (standard) | O |
| | SPDT 3W, 0.25A 125VAC / VDC, adjustable range 10-90% | A |
| | Special | Z |

Minimum differential range 0/5"H2O (example) - Maximum differential range 0/400"H2O - Maximum system pressure 300psi or 500psi — 0 0 5 "H2O

# PAG 3A Premium Pharmaceutical & Sanitary Gauge




## Description & Features:

- Designed for food, beverage & dairy and pharmaceutical applications
- ±0.75% full scale value accuracy
- Food grade glycerin filling standard
- Re-zero feature standard
- Crack/breakage-resistant polycarbonate lens standard
- Clean-In-Place design
- Steam-In-Place design
- Autoclavable
- ASME B40.100 compliant
- CRN registered
- 5 year warranty

## Applications:

- Designed for all sanitary applications including food & beverage, dairy, pharmaceutical and biotechnical
- Built to withstand the harshest of sanitary applications and where 3A approval is required
- For gas, air, liquid, pasty or powdery media

| Specifications | |
|---|---|
| Dial | 2.5” (63mm), 4” (100mm) aluminum |
| Case | 304 SS, polished |
| Repeatability | 0.25% of full scale value |
| Linearity | 0.25% of full scale value |
| Lens | 3/16” thick polycarbonate |
| Over-range Capability | 50% of full scale |
| Hysteresis | 0.25% of full scale |
| CIP Temperature Limit | 250°F (121°C) continuous |
| SIP Temperature Limit | 300°F (149°C) 1 hour, dry |
| Bourdon Tube | 316L SS, welded |
| Socket | 316L SS, welded |
| Storage Temperature | -22°F to 195°F (-30°C to 91°C) |
| Temperature Effect | Less than 0.16% per 10°F (5.5°C) change in process or ambient temperature |
| Actuating Fill | Food grade glycerin standard (Mineral oil, silicone and Neobee-20 optional) |
| Case Fluid | Food grade glycerin standard (Dry, mineral oil, silicone and Neobee-20 optional) |
| Pulsation Dampening | Standard |
| Re-zero Feature | Externally adjustable micrometer pointer |
| Wetted Parts | 316L SS, Ra = 8 microinches |
| Bezel | 304 SS, polished |
| Ambient Temperature | 40°F to 140°F (4°C to 60°C) |
| Process Temperature | 0°F to 250°F (-18°C to 121°C) |
| Accuracy | ±0.75% of full scale value |

## Order Codes

| Dial Size | 2.5" (63mm) | | | | 4" (100mm) | | | |
|---|---|---|---|---|---|---|---|---|
| Tri-Clamp® Connection | 1.5" (40mm) Bottom | 1.5" (40mm) Back | 2" (50mm) Bottom | 2" (50mm) Back | 1.5" (40mm) Bottom | 1.5" (40mm) Back | 2" (50mm) Bottom | 2" (50mm) Back |
| 30"/0/30 psi/bar | PAG15798 | PAG15798B | PAG20798 | PAG20798B | PAG151021 | PAG151021B | PAG201021 | PAG201021B |
| 30"/0/60 psi/bar | PAG15799 | PAG15799B | PAG20799 | PAG20799B | PAG151022 | PAG151022B | PAG201022 | PAG201022B |
| 30"/0/100 psi/bar | PAG15791 | PAG15791B | PAG20791 | PAG20791B | PAG151023 | PAG151023B | PAG201023 | PAG201023B |
| 30"/0/150 psi/bar | PAG15793 | PAG15793B | PAG20793 | PAG20793B | PAG151025 | PAG151025B | PAG201025 | PAG201025B |
| 30"/0/200 psi/bar | PAG15794 | PAG15794B | PAG20794 | PAG20794B | PAG151026 | PAG151026B | PAG201026 | PAG201026B |
| 30"/0/300 psi/bar | PAG15795 | PAG15795B | PAG20795 | PAG20795B | PAG151027 | PAG151027B | PAG201027 | PAG201027B |
| 0/30 psi/bar | PAG15802 | PAG15802B | PAG20802 | PAG20802B | PAG15602 | PAG15602B | PAG20602 | PAG20602B |
| 0/60 psi/bar | PAG15803 | PAG15803B | PAG20803 | PAG20803B | PAG15603 | PAG15603B | PAG20603 | PAG20603B |
| 0/100 psi/bar | PAG15804 | PAG15804B | PAG20804 | PAG20804B | PAG15604 | PAG15604B | PAG20604 | PAG20604B |
| 0/160 psi/bar | PAG15805 | PAG15805B | PAG20805 | PAG20805B | PAG15605 | PAG15605B | PAG20605 | PAG20605B |
| 0/200 psi/bar | PAG15806 | PAG15806B | PAG20806 | PAG20806B | PAG15606 | PAG15606B | PAG20606 | PAG20606B |
| 0/300 psi/bar | PAG15807 | PAG15807B | PAG20807 | PAG20807B | PAG15607 | PAG15607B | PAG20607 | PAG20607B |
| 0/600 psi/bar | PAG15808 | PAG15808B | PAG20808 | PAG20808B | PAG15608 | PAG15608B | PAG20608 | PAG20608B |

Other ranges and connection sizes available upon request. For scale change, refer to How to Order Guide for scale codes.
Autoclavable option available on 4" (100mm) dry only.

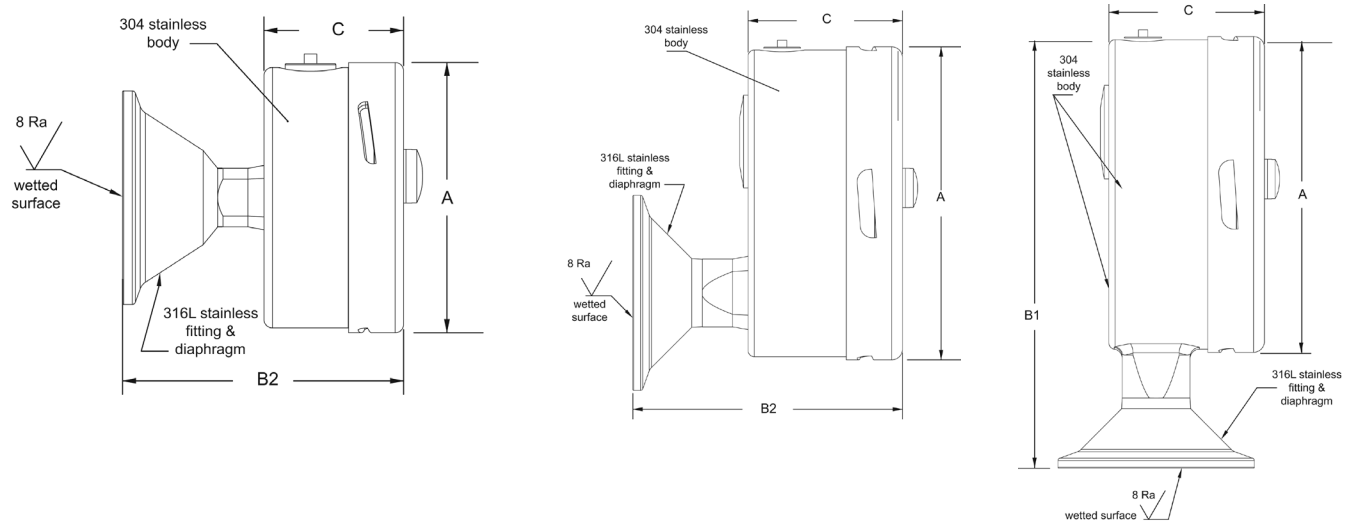


| Dial | A | B1 Tri-Clamp® Bottom | B2 Tri-Clamp® Back | C |
|---|---|---|---|---|
| 2.5" | 2.5" (63mm) | 3 13/16" (96.8mm) | 2 5/8" (66.8mm) | 1 5/16" (33.3mm) |
| 4" | 4" (100mm) | 5 7/16" (138.2mm) | 3 7/16" (87.4mm) | 1 15/16" (49.3mm) |

Tri-Clamp® is a registered trade mark of Tri-Clover

# PSQ 3A All-Purpose Quality Sanitary Gauge



## Description & Features:

- Quality series for all sanitary gauge systems
- Food grade glycerin filling standard
- Electro-polish finish
- Industrial grade polycarbonate lens standard
- Clean-In-Place and steam-in-place design
- 0.75”, 1.5” and 2” Tri-Clamp® connection bottom and back
- ASME B40.100 compliant
- CRN registered
- 5 year warranty

## Applications:

- Designed for all sanitary applications including food & beverage, dairy, pharmaceutical and biotechnical
- Built to withstand the harshest of sanitary applications and where 3A approval is required
- For gas, air, liquid, pasty or powdery media

| Specifications | |
|---|---|
| **Dial** | 2.5” (63mm), 4” (100mm) aluminum |
| **Case** | 304 SS, polished |
| **Bezel** | 304 SS, polished |
| **Lens** | Polycarbonate |
| **Over Pressure Limit** | 25% up to 600 psi (41 bar)<br>15% over 600 psi (41 bar) |
| **CIP Temperature Limit** | 250°F (121°C) continuous |
| **SIP Temperature Limit** | 266°F (130°C) 1 hour, dry |
| **Bourdon Tube** | 316 SS |
| **Socket** | 316 SS |
| **Movement** | 304 SS |
| **Enclosure Rating** | IP65/NEMA 4X |
| **System Fill** | Food grade glycerin standard (Mineral oil, silicone and Neobee-20 optional) |
| **Case Fill** | Food grade glycerin standard (Dry, mineral oil, silicone and Neobee-20 optional) |
| **Re-zero Feature** | Adjustable micrometer pointer (4” (100mm) dial only) |
| **Wetted Parts** | 316L SS, Ra = 8 microinches |
| **Ambient Temperature** | Glycerin filled: 40°F to 150°F (4°C to 65°C) |
| **Process Temperature** | 0°F to 250°F (-18°C to 121°C) |
| **Accuracy** | 2.5” (63mm): ±1.5% of full scale<br>4” (100mm): ±1.0% of full scale |
| **Agency Compliance** | 3A standard 74-06 |

# PSQ 3A All-Purpose Quality Sanitary Gauge

## Order Codes (products in bold are normally stock in North America)

| Dial Size | 2.5" (63mm) | | | | | | 4" (100mm) | | | |
|---|---|---|---|---|---|---|---|---|---|---|
| Tri-Clamp® Connection | 0.75" (20mm) Bottom | 0.75" (20mm) Back | 1.5" (40mm) Bottom | 1.5" (40mm) Back | 2" (50mm) Bottom | 2" (50mm) Back | 1.5" (40mm) Bottom | 1.5" (40mm) Back | 2" (50mm) Bottom | 2" (50mm) Back |
| 30" Hg Vac/bar | PSQ34797 | PSQ34797B | PSQ15797 | PSQ15797B | PSQ20797 | PSQ20797B | PSQ15202 | PSQ15202B | PSQ20120 | PSQ20120B |
| 30"/0/30 psi/bar | PSQ34798 | PSQ34798B | PSQ15798 | PSQ15798B | PSQ20798 | PSQ20798B | PSQ151021 | PSQ151021B | PSQ201021 | PSQ201021B |
| 30"/0/60 psi/bar | PSQ34799 | PSQ34799B | PSQ15799 | PSQ15799B | PSQ20799 | PSQ20799B | PSQ151022 | PSQ151022B | PSQ201022 | PSQ201022B |
| 30"/0/100 psi/bar | PSQ34791 | PSQ34791B | PSQ15791 | PSQ15791B | PSQ20791 | PSQ20791B | PSQ151023 | PSQ151023B | PSQ201023 | PSQ201023B |
| 30"/0/150 psi/bar | PSQ34793 | PSQ34793B | PSQ15793 | PSQ15793B | PSQ20793 | PSQ20793B | PSQ151025 | PSQ151025B | PSQ201025 | PSQ201025B |
| 30"/0/200 psi/bar | PSQ34794 | PSQ34794B | PSQ15794 | PSQ15794B | PSQ20794 | PSQ20794B | PSQ151026 | PSQ151026B | PSQ201026 | PSQ201026B |
| 30"/0/300 psi/bar | PSQ34795 | PSQ34795B | PSQ15795 | PSQ15795B | PSQ20795 | PSQ20795B | PSQ151027 | PSQ151027B | PSQ201027 | PSQ201027B |
| 0/30 psi/bar | PSQ34802 | PSQ34802B | **PSQ15802** | PSQ15802B | PSQ20802 | PSQ20802B | PSQ15602 | PSQ15602B | PSQ20602 | PSQ20602B |
| 0/60 psi/bar | PSQ34803 | PSQ34803B | **PSQ15803** | PSQ15803B | PSQ20803 | PSQ20803B | PSQ15603 | PSQ15603B | PSQ20603 | PSQ20603B |
| 0/100 psi/bar | PSQ34804 | PSQ34804B | **PSQ15804** | PSQ15804B | PSQ20804 | PSQ20804B | PSQ15604 | PSQ15604B | PSQ20604 | PSQ20604B |
| 0/160 psi/bar | PSQ34805 | PSQ34805B | **PSQ15805** | PSQ15805B | PSQ20805 | PSQ20805B | PSQ15605 | PSQ15605B | PSQ20605 | PSQ20605B |
| 0/200 psi/bar | PSQ34806 | PSQ34806B | **PSQ15806** | PSQ15806B | PSQ20806 | PSQ20806B | PSQ15606 | PSQ15606B | PSQ20606 | PSQ20606B |
| 0/300 psi/bar | PSQ34807 | PSQ34807B | PSQ15807 | PSQ15807B | PSQ20807 | PSQ20807B | PSQ15607 | PSQ15607B | PSQ20607 | PSQ20607B |
| 0/600 psi/bar | PSQ34808 | PSQ34808B | PSQ15808 | PSQ15808B | PSQ20808 | PSQ20808B | PSQ15608 | PSQ15608B | PSQ20608 | PSQ20608B |
| 0/1,000 psi/bar | PSQ34809 | PSQ34809B | PSQ15809 | PSQ15809B | PSQ20809 | PSQ20809B | PSQ15609 | PSQ15609B | PSQ20609 | PSQ20609B |

Other ranges and connection sizes available upon request. For scale change, refer to How to Order Guide for scale codes.

### 2.5" Bottom Connection 0.75" Tri-Clamp®

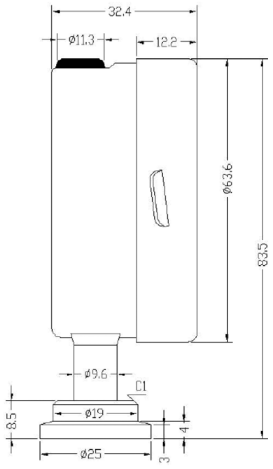


### 2.5" Bottom Connection 1.5" Tri-Clamp®

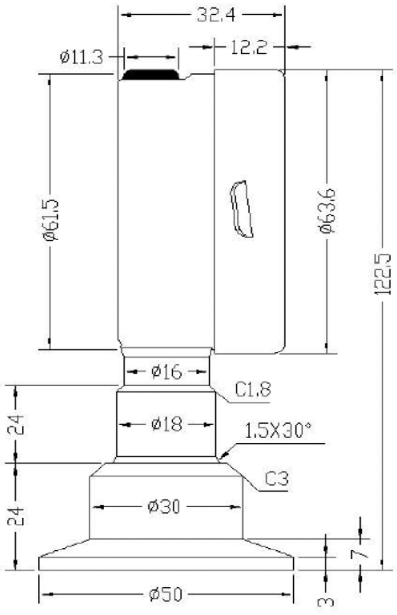


### 2.5" Bottom Connection 2" Tri-Clamp®

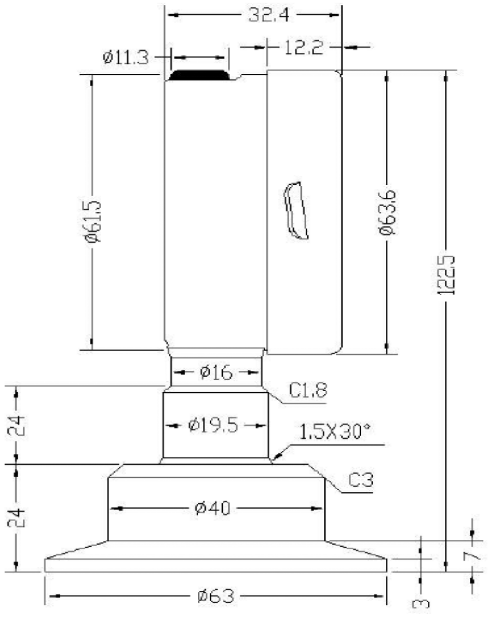


Tri-Clamp® is a registered trade mark of Tri-Clover

### 2.5” Back Connection 0.75” Tri-Clamp®

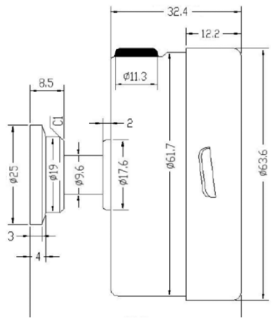


### 2.5” Back Connection 1.5” Tri-Clamp®

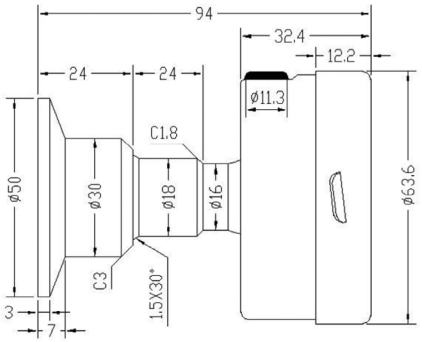


### 2.5” Back Connection 2” Tri-Clamp®

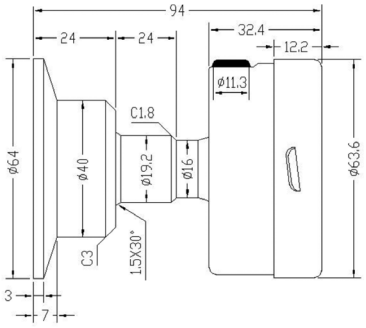


### 4” Bottom Connection 1.5” Tri-Clamp®

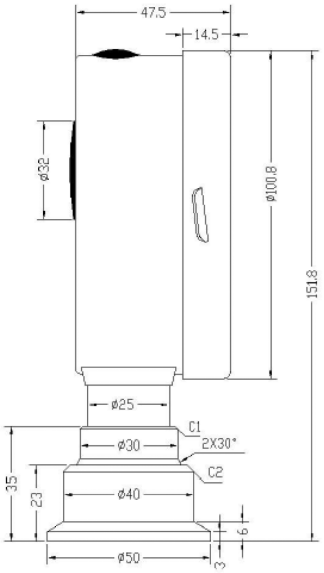


### 4” Bottom Connection 2” Tri-Clamp®

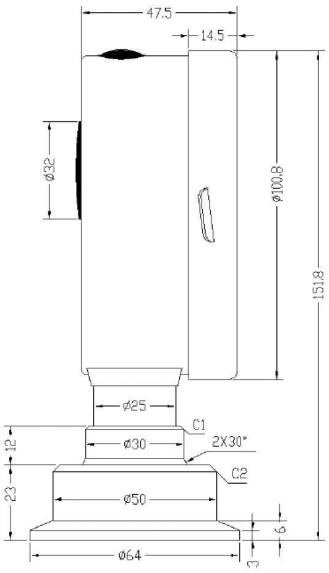


### 4” Back Connection 1.5” Tri-Clamp®

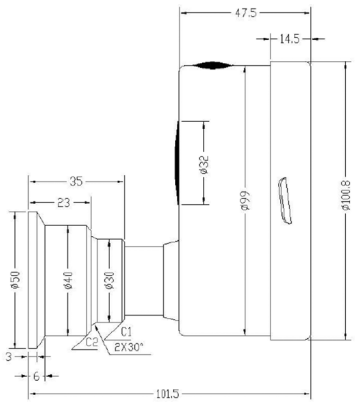


### 4” Back Connection 2” Tri-Clamp®

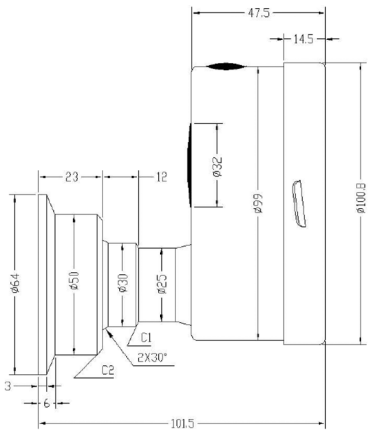

# PCG | Compressed Gas Gauge




## Description & Features:

- Economical 2” (50mm) gauge with built-in safety features
- Safety blowout back steel case
- ASME B40.100 compliant
- CRN registered
- 5 year warranty

## Applications:

- Beverage dispensing, regulators and tanks.
- Low pressures are used on the down stream side of a regulator. High pressures are used for measuring cylinder gas or tank pressures

| Specifications | |
|---|---|
| **Dial** | 1.5” (40mm), 2” (50mm) |
| **Case** | Steel with blowout back, painted black |
| **Lens** | Acrylic |
| **Ring** | Steel, painted black |
| **Socket** | Brass |
| **Connection** | 1/8” NPT or 1/4” NPT, bottom or back |
| **Bourdon Tube** | Brass |
| **Movement** | Brass |
| **Pointer** | Aluminum, painted black |
| **Over-pressure Limit** | 25% of full scale value |
| **Working Pressure** | Maximum 75% of full scale value |
| **Ambient/Process Temperature** | -40°F to 150°F (-40°C to 65°C) |
| **Accuracy** | ±3-2-3% ANSI/ASME Grade B |
| **Enclosure Rating** | IP52 |
| **Warning** | ⚠ **WARNING:** This product can expose you to chemicals including lead, which is known to the State of California to cause cancer and birth defects or other reproductive harm. For more information go to www.P65Warnings.ca.gov. |

## Order Codes

| Dial Size | 1.5” (40mm) | 2” (50mm) | |
|---|---|---|---|
| Connection | 1/8” Back | 1/8” Back | 1/4” Bottom |
| 0/30 psi | PCG9014 | - | PCG9020 |
| 0/60 psi | PCG9015 | - | PCG9021 |
| 0/100 psi | - | PCG9017 | PCG9022 |
| 0/160 psi | PCG9016 | PCG9018 | PCG9023 |
| 0/300 psi | - | PCG9019 | PCG9024 |
| 0/2,000 psi | - | - | PCG9025 |
| 0/3,000 psi | - | - | PCG9026 |

Other ranges and connection sizes available upon request. For scale change, refer to How to Order Guide for scale codes.

### 1.5” Back Connection

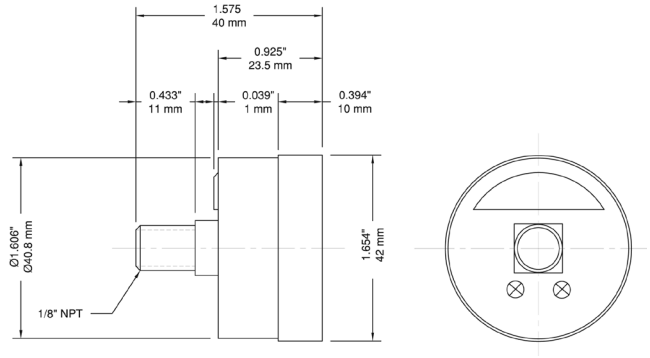


### 2” Back Connection

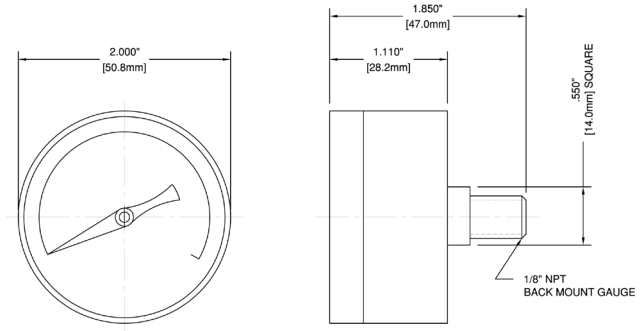

# PRL Regulator Gauge

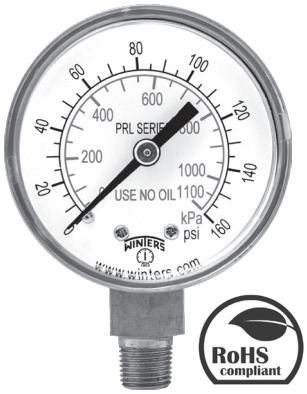


## Description & Features:

- Small diameter, all stainless steel gauge
- 1.5” (40mm) and 2” (50mm) dials
- Full view snap-in lens
- Back and bottom connection
- ASME B40.100 compliant
- CRN registered
- 5 year warranty

## Applications:

- Regulators, valve positioners and actuators that require a reliable and corrosion-resistant pressure gauge

| Specifications | |
|---|---|
| **Dial** | 1.5” (40mm), 2” (50mm) white aluminum with black and red markings |
| **Case** | 304 SS |
| **Lens** | Acrylic, snap-in type |
| **Socket** | 316 SS |
| **Connection** | 1/8” NPT or 1/4” NPT standard |
| **Bourdon Tube** | 316 SS |
| **Movement** | 304 SS |
| **Pointer** | Aluminum, painted black |
| **Welding** | Silver alloy |
| **Over-pressure Limit** | 25% of full scale value |
| **Working Pressure** | Maximum 75% of full scale value |
| **Ambient/Process Temperature** | -40°F to 150°F (-40°C to 65°C) |
| **Accuracy** | ±2.5% of full scale value |
| **Enclosure Rating** | IP52 |

## Order Codes (products in bold are normally stock in North America)

| Dial Size | 1.5” (40mm) | | 2” (50mm) | | | |
|---|---|---|---|---|---|---|
| Connection | 1/8” Bottom | 1/8” Back (CB) | 1/8” Bottom | 1/8” Back (CB) | 1/4” Bottom | 1/4” Back (CB) |
| 30”/0/15 psi/kPa | - | - | - | - | PRL017 | PRL026 |
| 30”/0/60 psi/kPa | - | - | - | PRL040 | PRL018 | PRL027 |
| 30”/0/100 psi/kPa | - | - | - | - | PRL019 | PRL028 |
| 30”/0/160 psi/kPa | - | - | - | - | PRL020 | PRL029 |
| 0/30 psi/kPa | PRL001 | **PRL005** | PRL009 | PRL013 | PRL021 | PRL030 |
| 0/60 psi/kPa | PRL002 | PRL006 | PRL010 | PRL014 | PRL022 | PRL031 |
| 0/100 psi/kPa | PRL003 | PRL007 | PRL011 | PRL015 | PRL023 | PRL032 |
| 0/160 psi/kPa | PRL004 | PRL008 | PRL012 | PRL016 | PRL024 | PRL033 |
| 0/200 psi/kPa | - | - | - | - | PRL042 | - |
| 0/400 psi/kPa | - | - | - | - | PRL036 | - |
| 0/600 psi/kPa | - | - | - | - | - | PRL034 |
| 0/3,000 psi/kPa | PRL038 | PRL041 | - | - | PRL025 | PRL035 |
| 0/5,000 psi/kPa | - | PRL039 | - | - | - | - |

Other ranges and connection sizes available upon request. For scale change, refer to How to Order Guide for scale codes.

### 1.5” Bottom Connection

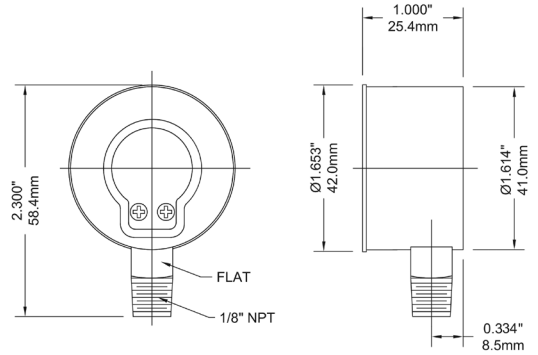


### 1.5” Back Connection

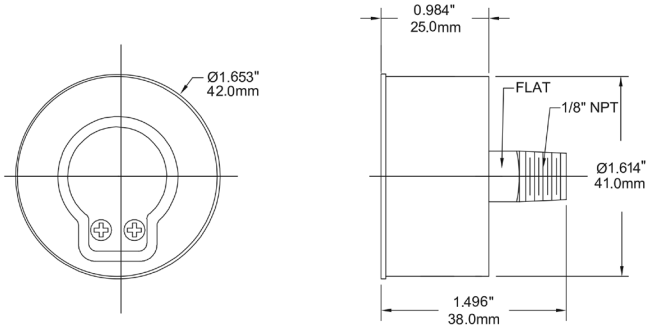


### 2” Bottom Connection

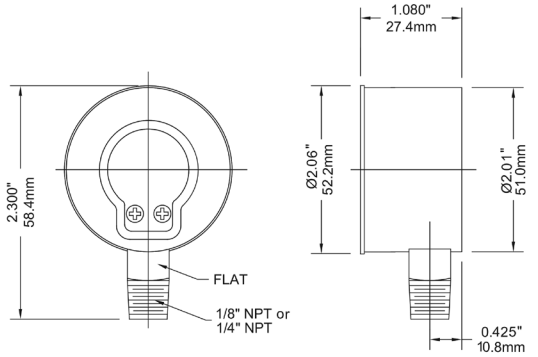


### 2” Back Connection

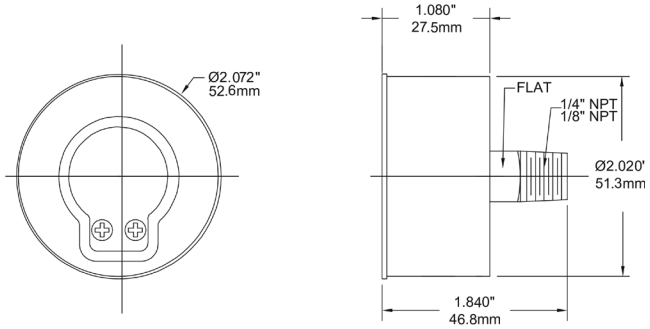

# PSP Spiral Tube Gauge




## Description & Features:

- Reliable, small diameter, low profile gauge
- 1” (25mm) to 1.5” (40mm) sizes
- 1/8” NPT socket
- Direct drive (no linkages or hairsprings) eliminating premature failure from the gear and movement
- Safety over-pressure port on the lens
- “Use No Oil” for use in oxygen service
- ASME B40.100 compliant
- CRN registered
- 5 year warranty

## Applications:

- Commonly used on portable pneumatic equipment such as compressors, hand-held sprayers, pressurized recreational guns, oxygen tanks and regulators, pumps and fire extinguishers

| Specifications | |
|---|---|
| **Dial** | 1” (25mm), 1.125” (30mm), 1.25” (32mm) or 1.5” (40mm) white aluminum with black markings |
| **Case** | 1” (25mm): Nickel plated brass<br>Others: 304 SS |
| **Lens** | Plexiglass |
| **Spiral/Socket** | 60 to 2,000 psi: Brass<br>3,000 psi and above: 304 SS |
| **Connection** | 1/8” NPT standard, back |
| **Pointer** | 2,000 psi and below: Brass<br>3,000 psi and above: 304 SS |
| **Over-pressure Limit** | 10% of full scale value<br>25% of full scale value |
| **Working Pressure** | Maximum 75% of full scale value |
| **Ambient/Process Temperature** | -40°F to 150°F (-40°C to 65°C) |
| **Accuracy** | ±3-2-3% ANSI/ASME Grade B |
| **Enclosure Rating** | IP65 |
| **Warning (brass internals only)** | ⚠ **WARNING:** This product can expose you to chemicals including lead, which is known to the State of California to cause cancer and birth defects or other reproductive harm. For more information go to www.P65Warnings.ca.gov. |

## Order Codes*

| Dial Size | 1" (25mm) | 1.125" (30mm) | 1.25" (32mm) | 1.5" (40mm) |
|---|---|---|---|---|
| 0/60 psi | - | PSP115060 | PSP125060 | PSP150060 |
| 0/100 psi | PSP10100 | PSP1150100 | PSP1250100 | PSP1500100 |
| 0/160 psi | PSP10160 | PSP1150160 | PSP1250160 | PSP1500160 |
| 0/200 psi | PSP10200 | PSP1150200 | PSP1250200 | PSP1500200 |
| 0/300 psi | PSP10300 | PSP1150300 | PSP1250300 | PSP1500300 |
| 0/600 psi | PSP10600 | PSP1150600 | PSP1250600 | PSP1500600 |
| 0/1,000 psi | PSP101000 | PSP11501000 | PSP12501000 | PSP15001000 |
| 0/1,500 psi | PSP101500 | PSP11501500 | PSP12501500 | PSP15001500 |
| 0/2,000 psi | PSP102000 | PSP11502000 | PSP12502000 | PSP15002000 |
| 0/3,000 psi | PSP103000 | PSP11503000 | PSP12503000 | PSP15003000 |
| 0/4,000 psi | PSP104000 | PSP11504000 | PSP12504000 | PSP15004000 |
| 0/5,000 psi | PSP105000 | PSP11505000 | PSP12505000 | PSP15005000 |

Other ranges and connection sizes available upon request. For scale change, refer to How to Order Guide for scale codes.
**For options, attach suffix to end of order code: i.e. PSP15001500-1.5BOOT for 1.5" PROTECTIVE BOOT**

**Option suffix:**
1.25BOOT = 1.25" (32mm) Protective rubber boot
1.5BOOT = 1.5" (40mm) Protective rubber boot
*Minimum order quantity required

### 1" Spiral Hex Tube Gauge

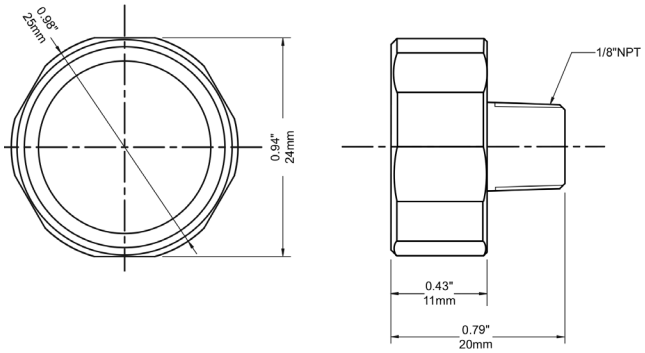


### 1.125" Spiral Tube Gauge

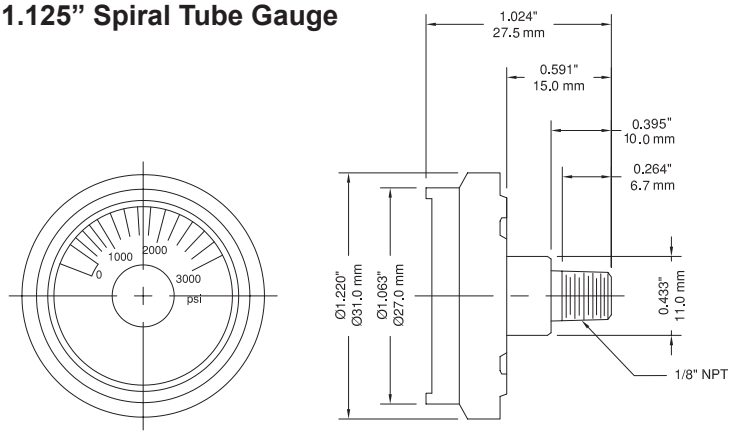


### 1.25" Spiral Tube Gauge

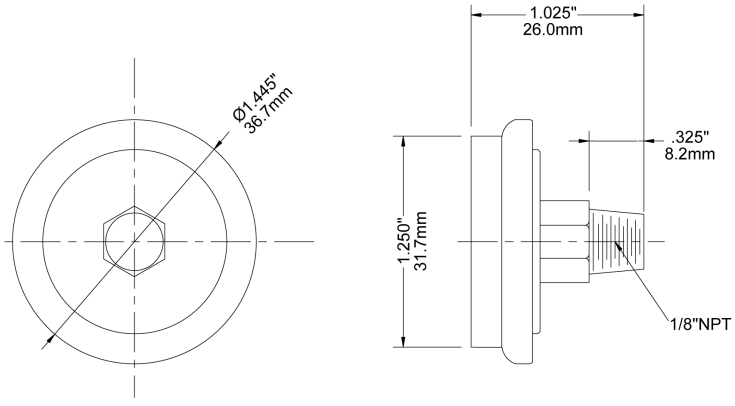


### 1.5" Spiral Tube Gauge

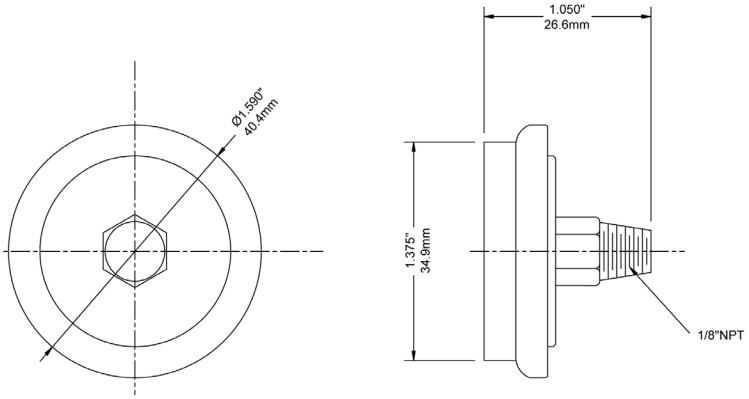

# PWL Welding Gauge




## Description & Features:

- Economical, non-sparking brass case gauge
- 1.5” (40mm), 2” (50mm) and 2.5” (63mm) brass case
- “USE NO OIL” on dial
- Brass socket
- Threaded-on polycarbonate lens
- ASME B40.100 compliant
- CRN registered
- 5 year warranty

## Applications:

- Welding tank regulators or manifolds, beverage dispensing regulators and other pressurized tanks
- Used on the down stream side of a regulator and high pressure of cylinder gases

| Specifications | |
|---|---|
| **Dial** | 1.5” (40mm), 2” (50mm), 2.5” (63mm) white aluminum with black and red markings |
| **Case** | Brass, polished |
| **Lens** | Polycarbonate, threaded |
| **Socket** | Brass |
| **Connection** | 1.5” (40mm) dial: 1/8” NPT bottom, 2” (50mm), 2.5” (63mm): 1/4” NPT bottom |
| **Bourdon Tube** | Phosphor bronze |
| **Movement** | Brass |
| **Pointer** | Aluminum, painted black |
| **Welding** | Silver alloy |
| **Over-pressure Limit** | 25% of full scale value |
| **Working Pressure** | Maximum 75% of full scale value |
| **Ambient/Process Temperature** | -40°F to 150°F (-40°C to 65°C) |
| **Accuracy** | ±3-2-3% ANSI/ASME Grade B |
| **Enclosure Rating** | IP52 |
| **Warning** | ⚠ **WARNING:** This product can expose you to chemicals including lead, which is known to the State of California to cause cancer and birth defects or other reproductive harm. For more information go to www.P65Warnings.ca.gov. |

Note: Also see PCG Compressed Gas Gauge for more choices

## Order Codes (products in bold are normally stock in North America)

| Dial Size | 1.5” (40mm) | 2” (50mm) | 2.5” (63mm) |
|---|---|---|---|
| **Connection** | **1/8” Bottom** | **1/4” Bottom** | **1/4” Bottom** |
| 0/30 psi/kPa | PWL2620 | **PWL2720** | PWL2820 |
| 0/60 psi/kPa | PWL2621 | PWL2721 | PWL2821 |
| 0/100 psi/kPa | PWL2622 | **PWL2722** | PWL2822 |
| 0/160 psi/kPa | - | PWL2723 | - |
| 0/200 psi/kPa | PWL2624 | **PWL2724** | PWL2824 |
| 0/400 psi/kPa | PWL2626 | **PWL2726** | PWL2826 |
| 0/600 psi/kPa | PWL2627 | PWL2727 | - |
| 0/3,000 psi/kPa | - | PWL2731 | - |
| 0/4,000 psi/kPa | PWL2632 | **PWL2732** | **PWL2832** |

Other ranges and connection sizes available upon request. For scale change, refer to How to Order Guide for scale codes.

## 2” Bottom Connection

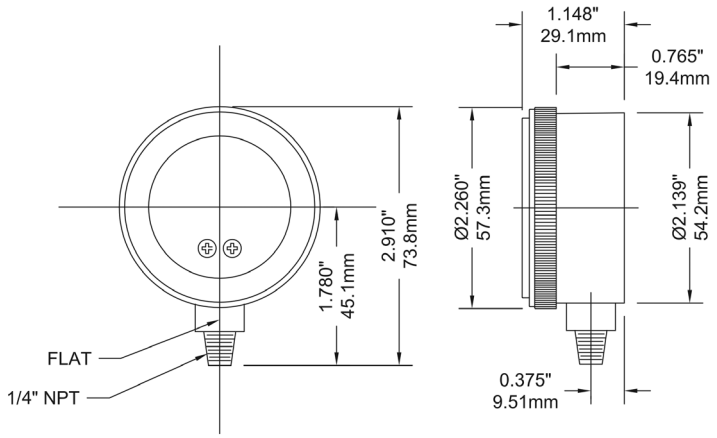


## 2.5” Bottom Connection

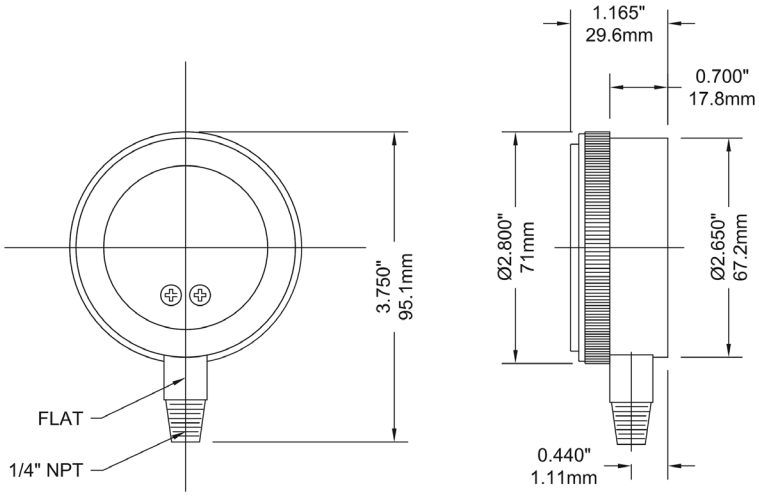

# PAM Ammonia Gauge




## Description & Features:

- To measure pressure and temperature of most ammonia systems
- ±0.5% to ±3-2-3% accuracy available
- 2.5” (63mm) to 10” (250mm) dial sizes
- ASME B40.100 compliant
- CRN registered
- 5 year warranty

## Applications:

- Used to display pressure and temperature on refrigeration systems

RoHS compliant

Note: RoHS applies to SS internals only

| Specifications | Accuracy: ±0.5% to ±1% | Accuracy: ±1.5% | Accuracy: ±3-2-3% |
|---|---|---|---|
| Dial | 4” (100mm), 6” (150mm), 8.5” (215mm), 10” (250mm): White aluminum with black and red markings | 2.5” (63mm), 3.5” (90mm), 4” (100mm): White aluminum with black and red markings | 2.5” (63mm), 4” (100mm): White aluminum with black and red markings |
| Case | 4” (100mm), 6” (150mm): AISI 304 SS<br>8.5” (215mm), 10” (250mm): Aluminum case | 2.5” (63mm), 4” (100mm): AISI 304 SS<br>3.5” (90mm): Steel, painted black | 2.5” (63mm), 4” (100mm): Steel, painted black |
| Lens | Polycarbonate | Polycarbonate | Polycarbonate |
| Ring | 4” (100mm), 6” (150mm): 304 SS<br>8.5” (215mm), 10” (250mm): Aluminum | 2.5” (63mm), 4” (100mm): 304 SS<br>3.5” (90mm): Steel painted black | 2.5” (63mm), 4” (100mm): Steel painted black |
| Socket | 316L SS | 316L SS | 2.5” (63mm): Steel<br>4” (100mm): Nickel plated steel |
| Connection | 1/4” NPT | 1/4” NPT | 1/4” NPT |
| Bourdon Tube | 316L SS, drawn seamless | 316L SS, drawn seamless | 316 SS |
| Movement | 304 SS | 304 SS | 304 SS |
| Pointer | Aluminum, anodized black, micrometer adjustable | Aluminum, anodized black | Aluminum, anodized black |
| Welding | TIG | TIG | TIG |
| Over-pressure Limit | 30% of full scale value | 30% of full scale value | 30% of full scale value |
| Working Pressure | Maximum 75% of full scale value | Maximum 75% of full scale value | Maximum 75% of full scale value |
| Ambient/Process Temperature | Dry: -40°F to 150°F (-40°C to 65°C)<br>Glycerin filled: -4°F to 150°F (-20°C to 65°C) | Dry: -40°F to 150°F (-40°C to 65°C)<br>Glycerin filled: -4°F to 150°F (-20°C to 65°C) | Dry: -40°F to 150°F (-40°C to 65°C) |
| Accuracy | 4” (100mm), 6” (150mm): ±1% ANSI/ASME Grade 1A<br>8.5” (215mm), 10” (250mm): ±0.5% ANSI/ASME Grade 2A | ±1.5% of full scale value | ±3-2-3% ANSI/ASME Grade B |
| Enclosure Rating | 2.5” (63mm), 4” (100mm), 6” (150mm): IP65<br>8.5” (215mm), 10” (250mm): IP52 | IP65 | IP52 |

# PAM Ammonia Gauge

## Order Codes (products in bold are normally stock in North America)

| | Accuracy: ±0.5% to ±1% | | Accuracy: ±1.5% | | Accuracy: ±3-2-3% | |
|---|---|---|---|---|---|---|
| **Dial Size** | **30/0/150 psi/°F** | **30/0/300 psi/°F** | **30/0/150 psi/°F** | **30/0/300 psi/°F** | **30/0/150 psi°/F** | **30/0/300 psi/°F** |
| 2.5” (63mm) Bottom | - | - | **PAM1750** | **PAM1751** | **PAM1699** | PAM1700 |
| 2.5” (63mm) Back (CB) | - | - | PAM1752 | PAM1753 | - | - |
| 3.5” (90mm) Bottom | - | - | PAM1717 | **PAM1818** | - | - |
| 4” (100mm) Bottom | PAM1705 | PAM1706 | **PAM1701** | **PAM1702** | PAM1695 | PAM1696 |
| 4” (100mm) Back (LB) | PAM1708 | PAM1709 | - | - | - | - |
| 4” (100mm) Back (CB) | - | - | PAM1703 | PAM1704 | PAM1697 | PAM1698 |
| 6” (150mm) Bottom | PAM1710 | PAM1711 | - | - | - | - |
| 8.5” (215mm) Bottom | PAM1712 | PAM1713 | - | - | - | - |
| 10” (250mm) Bottom | PAM1714 | PAM1715 | - | - | - | - |

Other ranges and connection sizes available upon request.

### 2.5” Bottom Connection

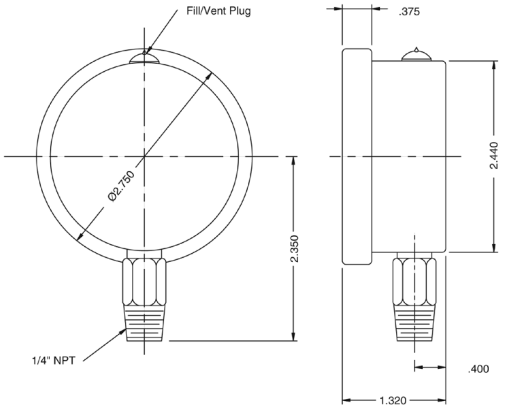


### 2.5” Back Connection

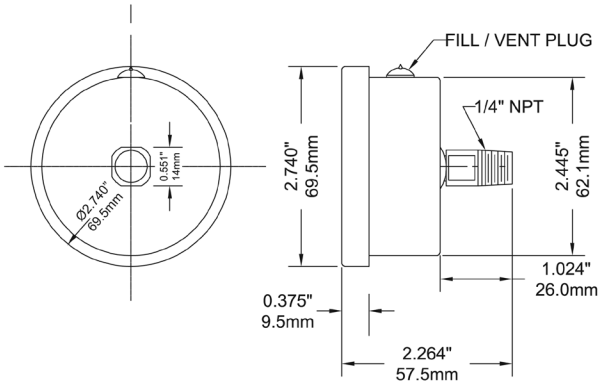


### 4” Bottom Connection

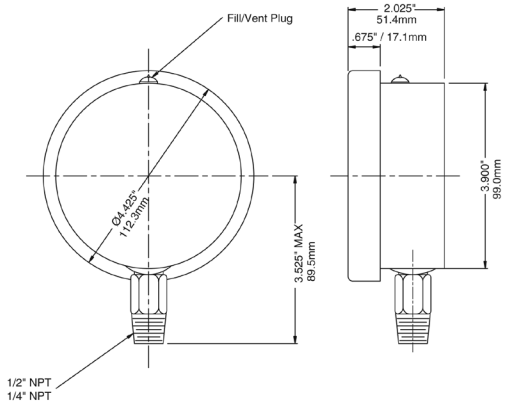


### 4” Back Connection

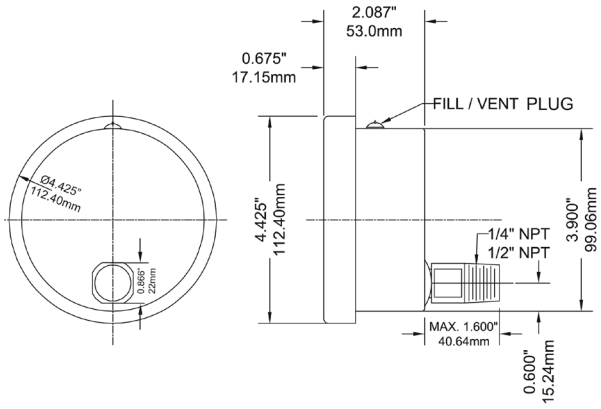


### 6” Bottom Connection

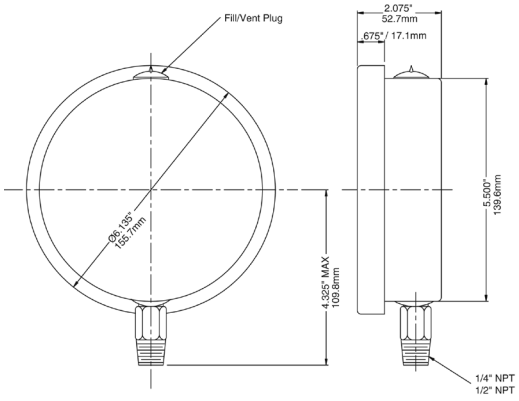


### 8.5” Bottom Connection with Back Flange

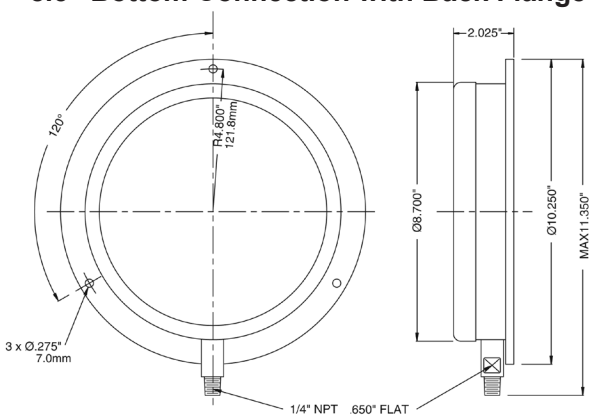

## PAM with Accuracy ±1.5%
### 3.5” Bottom Connection

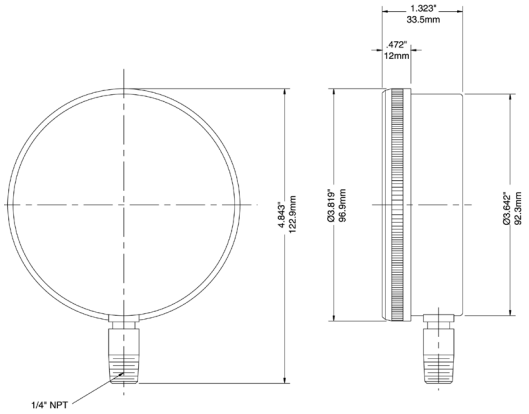


## PAM with Accuracy ±3-2-3%
### 2.5” Bottom Connection

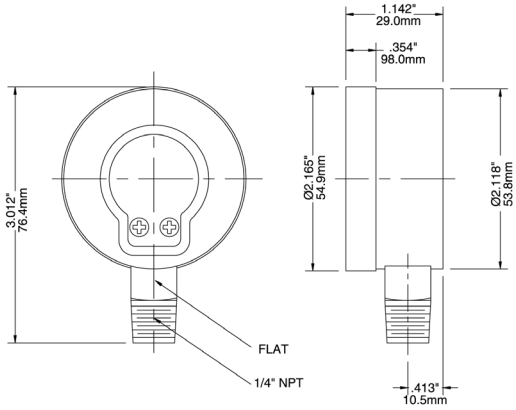


## 4” Bottom Connection

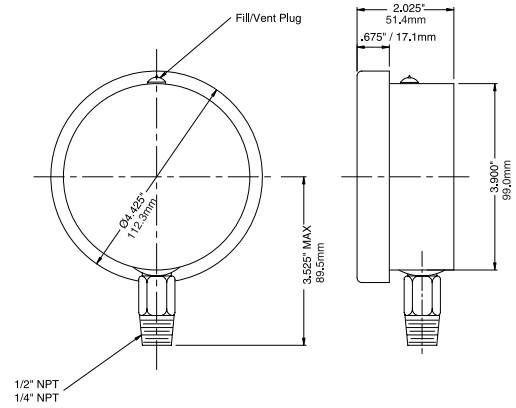


## 4” Bottom Connection

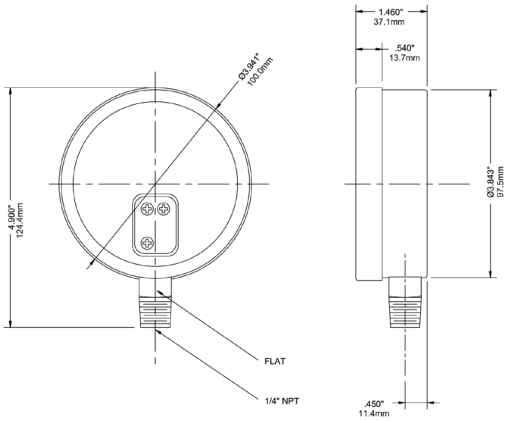


## 4” Back Connection

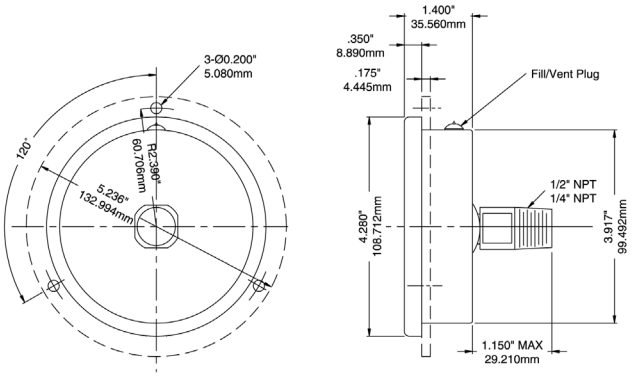


## 4” Back Connection

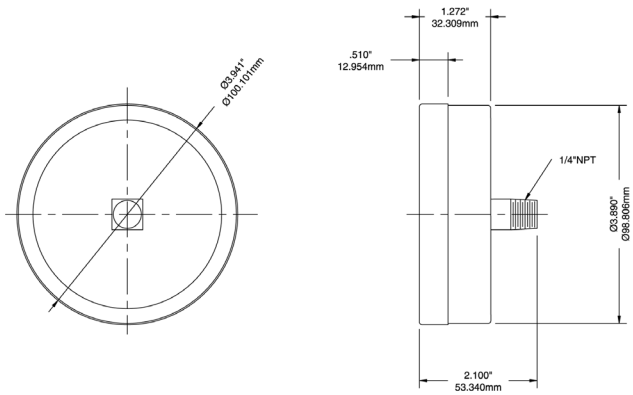

## Engineering Codes

| PAM | | P A M - | 2 5 | - # # # | B S A S S S | B R S S S L | N 4 | N G R | B L C B B | C H I K | G F G W S F D R Y A L P L G L S G F F B F U C B G A R S R 6 R L R R S R O N R M S M L O U S E N A S H F P B C 1 C 2 C T F T M A X M I N R S P Z R Z # # # |
|---|---|---|---|---|---|---|---|---|---|---|---|
| **DIAL SIZE** | 2.5" (63mm) | | 2 5 | | | | | | | | |
| | 3.5" (63mm) | | 3 5 | | | | | | | | |
| | 4" (100mm) | | 4 0 | | | | | | | | |
| | 6" (160mm) | | 6 0 | | | | | | | | |
| | 8.5" (215mm) | | 8 5 | | | | | | | | |
| | 10" (260mm) | | 1 0 | | | | | | | | |
| **PRESSURE SCALE & RANGE** | SEE PRESSURE RANGES | | | # # # | | | | | | | |
| **CASE MATERIAL** | BLACK STEEL | | | | B S | | | | | | |
| | ALUMINUM | | | | A | | | | | | |
| | 304SS | | | | S | | | | | | |
| | 316SS | | | | S S | | | | | | |
| **WETTED PARTS** | BRASS/BRONZE | | | | | B R | | | | | |
| | 316SS | | | | | S S | | | | | |
| | 316L | | | | | S L | | | | | |
| **PROCESS CONNECTION SIZE** | 1/4" | | | | | | N 4 | | | | |
| **PROCESS CONNECTION TYPE** | NPT | | | | | | | N | | | |
| | BSPP (G), PARALLEL | | | | | | | G | | | |
| | BSPT (R), TAPERED | | | | | | | R | | | |
| **PROCESS CONNECTION LOCATION** | BOTTOM, STEM | | | | | | | | B | | |
| | LOWER BACK | | | | | | | | L B | | |
| | CENTRE BACK | | | | | | | | C B | | |
| **ACCURACY %** | 3-2-3 | | | | | | | | | C | |
| | 1.5 | | | | | | | | | H | |
| | 1.0 | | | | | | | | | I | |
| | 0.5 | | | | | | | | | K | |
| **OPTIONS, LIST IN ALPHA-NUMERIC ORDER** | GLYCERIN FILL (FOOD GRADE) | | | | | | | | | | G F |
| | GLYCERIN WATER FILL | | | | | | | | | | G W |
| | SILICONE FILL | | | | | | | | | | S F |
| | DRY CASE | | | | | | | | | | D R Y |
| | ACRYLIC | | | | | | | | | | A L |
| | POLYCARBONATE LENS | | | | | | | | | | P L |
| | GLASS LENS | | | | | | | | | | G L |
| | SAFETY GLASS, LAMINATED | | | | | | | | | | S G |
| | FRONT FLANGE | | | | | | | | | | F F |
| | BACK FLANGE | | | | | | | | | | B F |
| | U-CLAMP | | | | | | | | | | U C |
| | BLACK STEEL POLISHED RING | | | | | | | | | | B G |
| | ALUMINUM POLISHED RING | | | | | | | | | | A R |
| | STAINLESS STEEL POLISHED RING | | | | | | | | | | S R |
| | 316SS POLISHED RING | | | | | | | | | | 6 R |
| | 316L POLISHED RING | | | | | | | | | | L R |
| | RESTRICTOR SCREW | | | | | | | | | | R S |
| | RESTRICTED ORIFICE | | | | | | | | | | R O |
| | NO RESTRICTOR SCREW / ORIFICE | | | | | | | | | | N R |
| | MOVEMENT 316SS | | | | | | | | | | M S |
| | MOVEMENT 316L | | | | | | | | | | M L |
| | OVER & UNDER PRESSURE STOP | | | | | | | | | | O U S |
| | EN-837 ON-DIAL | | | | | | | | | | E N |
| | ASME B40.100 ON-DIAL | | | | | | | | | | A S |
| | NO OIL (HYDROCARBON FREE) ON DIAL | | | | | | | | | | H F |
| | PROTECTIVE RUBBER BOOT | | | | | | | | | | P B |
| | CUSTOM DIAL, SIMPLE | | | | | | | | | | C 1 |
| | CUSTOM DIAL, COMPLEX | | | | | | | | | | C 2 |
| | INCLUDE CELCIUS TEMPERATURE SCALE | | | | | | | | | | C T |
| | INCLUDE FAHRENHEIT TEMPERATURE SCALE | | | | | | | | | | F T |
| | MAXIMUM ADJUSTABLE POINTER | | | | | | | | | | M A X |
| | MINIMUM ADJUSTABLE POINTER | | | | | | | | | | M I N |
| | RED SET POINTER | | | | | | | | | | R S P |
| | STABILIZR® | | | | | | | | | | Z R |
| | SPECIAL | | | | | | | | | | Z # # # |

# PAL Altitude Gauge




## Description & Features:

- Premium aluminum case gauge designed to read head pressure
- Stainless steel or brass wetted parts
- PSI and Feet of Water scales
- ASME B40.100 compliant
- CRN registered
- 5 year warranty

## Applications:

- Used to indicate liquid level in tank or stand pipe, etc.
- Economical alternative for level measurement

| Specifications | Stainless Steel Internals | Brass Internals |
|---|---|---|
| Dial | 4.5” (115mm) | 4.5” (115mm) |
| Case | Aluminum, painted black | Aluminum, painted black |
| Front Flange | SS, polished | SS, polished |
| Back Flange | Steel, painted black | Steel, painted black |
| Lens | Glass | Glass |
| Ring | SS, polished | SS, polished |
| Socket | 316L SS | Brass |
| Connection | 1/4” NPT or 1/2” NPT standard | 1/4” NPT or 1/2” NPT standard |
| Bourdon Tube | 316L SS | Phosphor bronze |
| Movement | SS | Brass |
| Pointer | Aluminum, anodized black, micrometer adjustable | Aluminum, anodized black, micrometer adjustable |
| Welding | 316L SS TIG Argonarc | Tin/copper alloy |
| Over-pressure Limit | 30% of full scale value | 30% of full scale value |
| Working Pressure | Maximum 75% of full scale value | Maximum 75% of full scale value |
| Ambient/Process Temperature | -40°F to 150°F (-40°C to 65°C) | -40°F to 150°F (-40°C to 65°C) |
| Accuracy | ±0.5% ANSI/ASME Grade 2A | ±0.5% ANSI/ASME Grade 2A |
| Enclosure Rating | IP52 | IP52 |
| Warning (brass internals only) | N/A | ⚠ **WARNING:** This product can expose you to chemicals including lead, which is known to the State of California to cause cancer and birth defects or other reproductive harm. For more information go to www.P65Warnings.ca.gov. |

## Order Codes

| Dial Size | 4.5” (115mm) | |
|---|---|---|
| Movement, Socket, Tube | Brass | SS |
| 0/35 ft/water | PAL6008ALT | PAL6033ALT |
| 0/70 ft/water | PAL6009ALT | PAL6034ALT |
| 0/140 ft/water | PAL6010ALT | PAL6035ALT |
| 0/230 ft/water | PAL6011ALT | PAL6036ALT |
| 0/370 ft/water | PAL6012ALT | PAL6037ALT |
| 0/460 ft/water | PAL6013ALT | PAL6038ALT |
| 0/690 ft/water | PAL6014ALT | PAL6039ALT |

Other ranges and connection sizes available upon request. For scale change, refer to How to Order Guide for scale codes. **For options, attach suffix to end of order code: i.e. PAL6036ALT-B for BACK CONNECTION**

**Option suffix:**
300BF = Back flange
B = Back connection
MAXI45 = Maximum adjustable pointer available
MS = Monel® socket and tube
OST = Over stop protection
SFC = Solid front safety case
SG-45 = 4.5” (115mm) Safety glass lens
UST = Under stop protection

## 4.5” Bottom Connection with Standard Back Flange

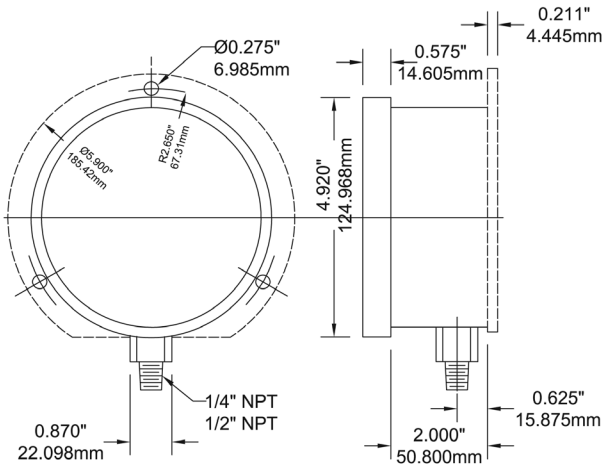


Monel® is a registered trademark of Inco Alloys International

# PFE Sprinkler Gauge




## Description & Features:

- Specially designed for fire sprinkler systems
- Suitable for air and water media
- Corrosion resistant case
- Dual scales (psi/kpa, psi/bar, psi/kg/cm$^2$) and single scale (psi) pressure ratings
- Approved by Factory Mutual (FM) and listed by Underwriter Laboratory (UL-393), USA and Canada
- Internal pointer over-travel stop
- ASME B40.100 compliant
- CRN registered
- 5 year warranty

## Applications:

- Ideally suited for fire sprinkler systems and fire fighting equipment
- Suitable for non-clogging and non-corrosive media

| Specifications | |
|---|---|
| **Dial** | 3.5” (90mm), white aluminum with black and red markings |
| **Case** | Black plastic |
| **Lens** | Polycarbonate, threaded |
| **Socket** | Brass |
| **Connection** | 1/4” NPT standard, bottom (1/4” bspt bottom option) |
| **Bourdon Tube** | Phosphor bronze |
| **Movement** | Brass |
| **Pointer** | Aluminum, black |
| **Welding** | Silver Alloy |
| **Working Pressure** | Maximum 75% of full scale value |
| **Ambient/Process Temperature** | -40°F to 150°F (-40°C to 65°C) |
| **Accuracy** | ±3-2-3% ASME Grade B |
| **Enclosure Rating** | IP52 |
| **Warning** | ⚠ **WARNING:** This product can expose you to chemicals including lead, which is known to the State of California to cause cancer and birth defects or other reproductive harm. For more information go to www.P65Warnings.ca.gov. |

## Order Codes (products in bold are normally stock in North America)

| Product | Air | Water | Air/Water |
|---|---|---|---|
| 0/80/retard/250 psi | **PFE3932R1** | - | - |
| 0/300 psi | - | **PFE3933R1** | **PFE3935R1** |
| 0/80/retard/250 psi/kPa | **PFE3932** | - | - |
| 0/300 psi/kPa | - | **PFE3933** | **PFE3935** |
| 0/80/retard/250 psi/bar | PFE3932R1R11 | - | - |
| 0/300 psi/bar | - | PFE3933R1R11 | PFE3935R1R11 |
| 0/80/retard/250 psi/kg/cm$^2$ | PFE3932R1R3 | - | - |
| 0/300 psi/kg/cm$^2$ | - | PFE3933R1R3 | PFE3935R1R3 |

Option suffix: BSPT - 1/4” BSPT process connection

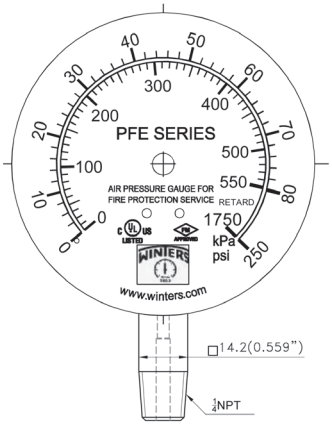


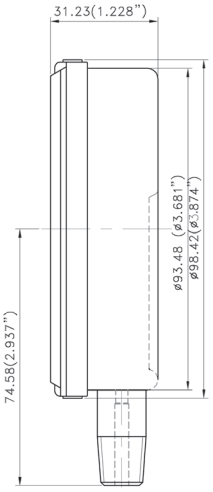

# PFG Refrigeration Gauge



## Description & Features:

- 2.5” (63mm) to 6” (150mm) durable gauges
- 2.5” (63mm) dial has a blue or red coloured case for easy identification
- Dual scale (psi/°F)
- Flutterless movement on the 2.5” (63mm)
- Chlorofluorocarbon (CFC) temperature scales (R-12, R-22 & R-502)
- Brass internals
- 1/4” NPT standard
- ASME B40.100 compliant
- CRN registered
- 5 year warranty

## Applications:

- Refrigeration equipment and refrigeration recovery equipment
- Suitable for non-clogging and non-corrossive media

| Specifications | |
|---|---|
| **Dial** | 2.5” (63mm), 4” (100mm), 6” (150mm): White aluminum |
| **Case** | 2.5” (63mm): Plastic, colour coded, blue for low pressure and red for high pressure<br>4” (100mm), 6” (150mm): Steel, painted black |
| **Lens** | 2,5” (63mm): Plexiglass, threaded<br>4” (100mm), 6” (150mm): Glass |
| **Ring** | 2.5” (63mm): SS, crimped<br>4” (100mm): Brass, polished<br>6” (150mm): Steel, painted black |
| **Connection** | 1/8” NPT or 1/4” NPT standard |
| **Restrictor Screw** | Standard |
| **Recalibrator Screw** | Standard |
| **Bourdon Tube** | 2.5” (63mm): Phosphor bronze, vibration free (flutterless movement)<br>4” (100mm), 6” (150mm): Phosphor bronze |
| **Pointer** | Aluminum, anodized black |
| **Welding** | #50 tin solder |
| **Over-pressure Limit** | 25% of full scale value |
| **Scale** | psi/ºF (R-12/R-22/R-502) |
| **Working Pressure** | Maximum 75% of full scale value |
| **Ambient/Process Temperature** | -40°F to 158°F (-40°C to 70°C) |
| **Accuracy** | 2.5” (63mm): ±2% of full scale value<br>4” (100mm), 6” (150mm): ±1% ANSI/ASME Grade 1A |
| **Enclosure Rating** | IP52 |
| **Warning (brass internals only)** | ⚠ **WARNING:** This product can expose you to chemicals including lead, which is known to the State of California to cause cancer and birth defects or other reproductive harm. For more information go to www.P65Warnings.ca.gov. |

## Order Codes

| Dial Size | 2.5” (63mm) | 4” (100mm) | 6” (150mm) |
|---|---|---|---|
| Case Material | Plastic | Steel | |
| Connection | 1/8” Bottom | 1/4” Bottom | 1/4” Bottom |
| 30”/0/120 psi (retard 250) | **PFG1730** | PFG1734 | PFG1738 |
| 30”/0/300 psi | PFG1731 | PFG1735 | PFG1739 |
| 0/500 psi | PFG1732 | PFG1736 | PFG1740 |

Other ranges and connection sizes available upon request. For scale change, refer to How to Order Guide for scale codes.
Blister packaging available.

### 2.5” Bottom Connection

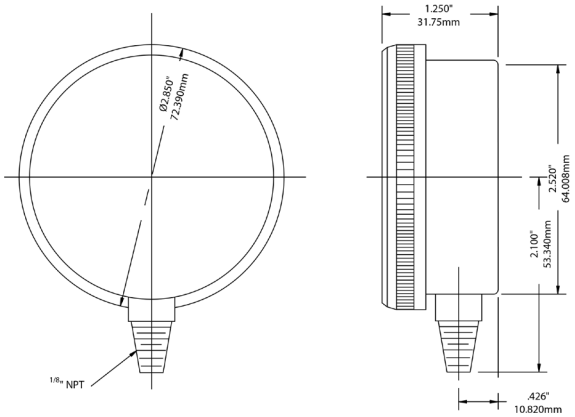


### 4” Bottom Connection

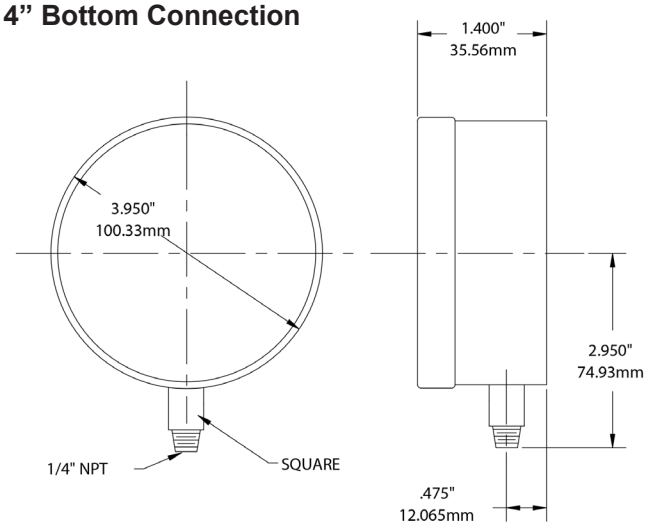


### 6” Bottom Connection

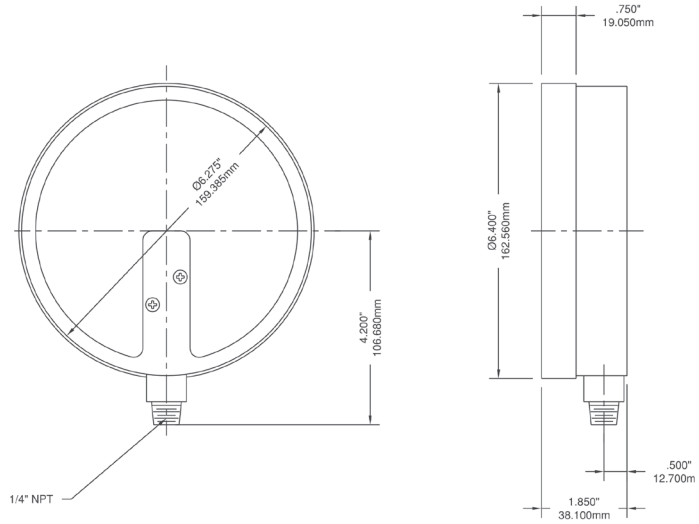

# PLP Low Pressure Gauge




1

2

1. Bottom Connection
2. Back Connection

## Description & Features:

- Highly accurate reading of low pressures
- Brass or stainless steel wetted parts
- Ranges from 15" $H_2O$/oz to 10 psi
- Over-pressure protection on some models (OP)
- ASME B40.100 compliant
- CRN registered
- 5 year warranty

## Applications:

- Suitable for measuring gaseous media both corrosive and non-corrosive
- Used to measure natural gas pressure as well as air flow indication and leak detection
- Vacuum pumps, air compressors, air filters, gas burners, vacuum ovens, suction regulators and respirators

| Specifications | Stainless Steel Internals | Brass Internals |
|---|---|---|
| **Dial** | 2.5" (63mm), 4" (100mm), 4.5" (115mm) and 6" (150mm), white aluminum with black and red markings | 2.5" (63mm), 4" (100mm), 4.5" (115mm) and 6" (150mm), white aluminum with black and red markings |
| **Case** | 2.5" (63mm), 4" (100mm): AISI 304 SS<br>4.5" (115mm), 6" (150mm): Aluminum, painted black | 2.5" (63mm), 4" (100mm): Steel, painted black<br>4.5" (115mm), 6" (150mm): Cast aluminum, painted black |
| **Lens** | 2.5" (63mm): Polycarbonate<br>4" (100mm): Styrene-acrylonitrile resin<br>4.5" (115mm), 6" (150mm): Glass | 2.5" (63mm), 4" (100mm): Polycarbonate<br>4.5" (115mm), 6" (150mm): Glass |
| **Ring** | 2.5" (63mm), 4" (100mm): No ring<br>4.5" (115mm), 6" (150mm): Aluminum | 2.5" (63mm): No ring<br>4" (100mm): Steel<br>4.5" (115mm), 6" (150mm): Aluminum |
| **Socket** | AISI 316 SS | Brass; 2.5' dial with restrictive orifice |
| **Connection** | 1/4" NPT standard | 1/4" NPT standard |
| **Diaphragm Element** | AISI 316 SS | Phosphor bronze |
| **Movement** | AISI 316 SS | 2.5" (63mm): Engineering plastic upper and lower plate with brass pinion and sector; 4" (100mm), 4.5" (115mm), 6" (150mm): Brass |
| **Pointer** | Aluminum, anodized black | Aluminum, anodized black; 2.5' dial with pointer adjustment screw |
| **Welding** | TIG | Solder/brazed |
| **Working Pressure** | 75% of full scale value | 60% of full scale value (fluctuating)<br>75% of full scale value (static) |
| **Over-pressure Limit** | 30% of full scale value | 30% of full scale value, up to 200% with over-pressure protection (OP) option |
| **Ambient/Process Temperature** | -40°F to 150°F (-40°C to 65°C) | -40°F to 150°F (-40°C to 65°C) |
| **Accuracy** | ±1.6% of full scale | ±3-2-3% ANSI/ASME Grade B |
| **Enclosure Rating** | IP52 | IP52 |
| **Warning (brass internals only)** | N/A | ⚠ **WARNING:** This product can expose you to chemicals including lead, which is known to the State of California to cause cancer and birth defects or other reproductive harm. For more information go to www.P65Warnings.ca.gov. |

# PLP Low Pressure Gauge

## Order Codes (products in bold are normally stock in North America)

| Dial Size | 2.5" (63mm) | | | 4" (100mm) | | | | 4.5" (115mm) | | | |
|---|---|---|---|---|---|---|---|---|---|---|---|
| Case Material | Steel | | SS | Steel | | | SS | Aluminum | | | |
| Connection | 1/4" Bottom | 1/4" Back (CB) | 1/4" Bottom | 1/4" Bottom | 1/4" Back (CB) | 1/4" Back (CB) | 1/4" Bottom | 1/4" Bottom | 1/4" Back (CB) | 1/4" Bottom | 1/4" Back (CB) |
| Capsule, Movement, Socket | Brass | | SS | Brass | | SS | | Brass | | SS | |
| 0/15" water (vac) | PLP300V | PLP340V | PLP350V | PLP310V | PLP4230V | PLP4240V | PLP4200V | PLP4250V | PLP4290V | PLP4260V | PLP4300V |
| 0/32" water (vac) | PLP301V | PLP341V | PLP351V | PLP311V | PLP4231V | PLP4241V | PLP4201V | PLP4251V | PLP4291V | PLP4261V | PLP4301V |
| 0/55" water (vac) | PLP302V | PLP342V | PLP352V | PLP312V | PLP4232V | PLP4242V | PLP4202V | PLP4252V | PLP4292V | PLP4262V | PLP4302V |
| 0/100" water (vac) | **PLP304V** | PLP343V | PLP353V | PLP313V | PLP4233V | PLP4243V | PLP4203V | PLP4253V | PLP4293V | PLP4263V | PLP4303V |
| 0/200" water (vac) | **PLP303V** | - | PLP356V | - | - | - | - | - | - | - | - |
| 0/15" water/oz | **PLP300** | **PLP340** | PLP350 | PLP310 | PLP4230 | PLP4240 | PLP4200 | PLP4250 | PLP4290 | PLP4260 | PLP4300 |
| 0/32" water/oz | **PLP301** | **PLP341** | PLP351 | **PLP311** | PLP4231 | PLP4241 | PLP4201 | PLP4251 | PLP4291 | PLP4261 | PLP4301 |
| 0/55" water/oz | **PLP302** | **PLP342** | PLP352 | PLP312 | PLP4232 | PLP4242 | PLP4202 | PLP4252 | PLP4292 | PLP4262 | PLP4302 |
| 0/100" water/oz | **PLP304** | **PLP343** | PLP353 | PLP313 | PLP4233 | PLP4243 | PLP4203 | PLP4253 | PLP4293 | PLP4263 | PLP4303 |
| 0/200" water/oz | **PLP303** | PLP346 | PLP356 | PLP316 | PLP4236 | PLP4246 | PLP4206 | PLP4256 | PLP4296 | PLP4266 | PLP4306 |
| 0/5 psi/kPa | **PLP305** | **PLP344** | PLP354 | PLP314 | PLP4234 | PLP4244 | PLP4204 | PLP4254 | PLP4294 | PLP4264 | PLP4304 |
| 0/10 psi/kPa | **PLP306** | PLP345 | PLP355 | PLP315 | PLP4235 | PLP4245 | PLP4205 | PLP4255 | PLP4295 | PLP4265 | PLP4305 |

| Dial Size | 6" (150mm) | | | |
|---|---|---|---|---|
| Case Material | Aluminum | | | |
| Connection | 1/4" Bottom | 1/4" Back (CB) | 1/4" Bottom | 1/4" Back (CB) |
| Capsule, Movement, Socket | Brass | | SS | |
| 0/15" water (vac) | PLP4310V | - | PLP4320V | - |
| 0/32" water (vac) | PLP4311V | - | PLP4321V | - |
| 0/55" water (vac) | PLP4312V | - | PLP4322V | - |
| 0/100" water (vac) | PLP4313V | - | PLP4323V | - |
| 0/15" water/oz | PLP4310 | - | PLP4320 | PLP4360 |
| 0/32" water/oz | PLP4311 | PLP4351 | PLP4321 | PLP4361 |
| 0/55" water/oz | PLP4312 | - | PLP4322 | - |
| 0/100" water/oz | PLP4313 | PLP4353 | PLP4323 | PLP4363 |
| 0/200" water/oz | PLP4316 | - | PLP4326 | - |
| 0/5 psi/kPa | PLP4314 | PLP4354 | PLP4324 | PLP4364 |
| 0/10 psi/kPa | PLP4315 | PLP4355 | PLP4325 | PLP4365 |

| Dial Size | 2.5" (63mm) |
|---|---|
| Case Material | Steel |
| Connection | 1/4" Bottom |
| Capsule, Movement, Socket | Brass w/Over-pressure protection |
| 0/5 psi/kPa | PLP305OP |
| 0/8 psi/kPa | **PLP307OP** |
| 0/10 psi/kPa | PLP306OP |

| Description | Code |
|---|---|
| Test Block Only | EGT |

Other ranges and connection sizes available upon request.

### 2.5" Bottom Connection Brass

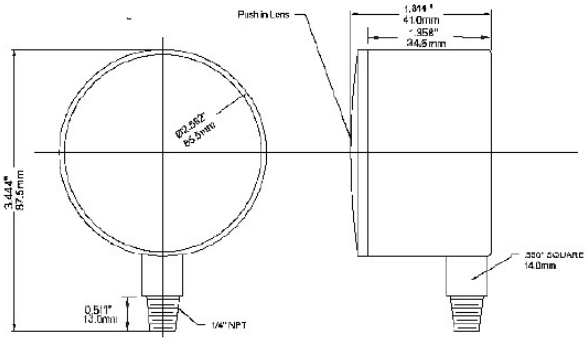


### 2.5" Back Connection Brass

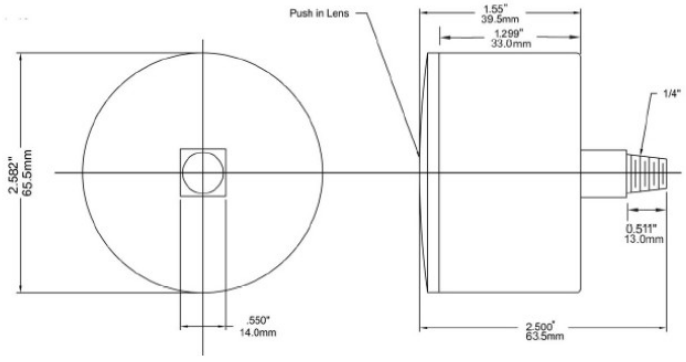

## 4” Bottom Connection Brass

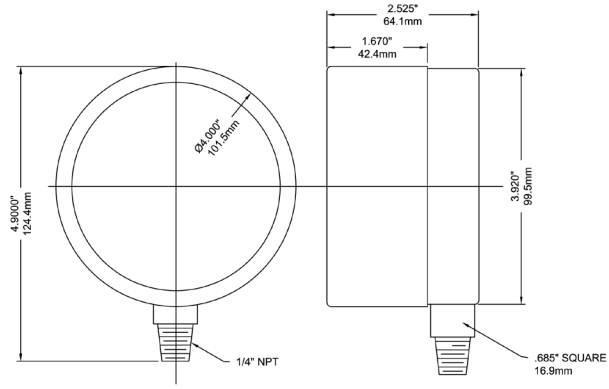


## 4” Back Connection Brass

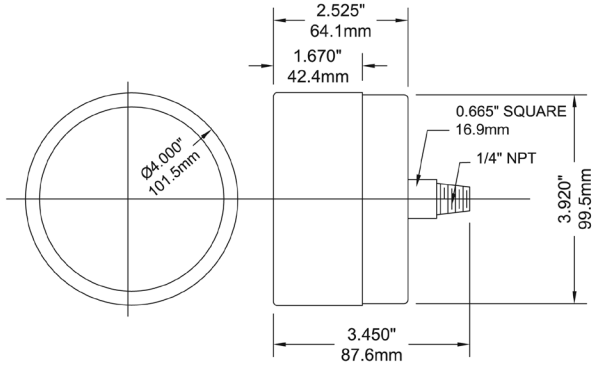


## 4.5” Bottom Connection Stainless Steel

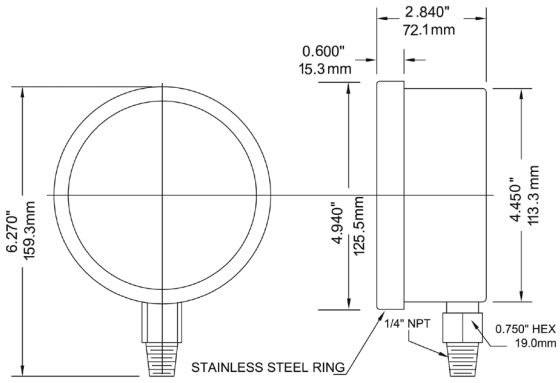


## 4.5” Back Connection Stainless Steel with Front Flange

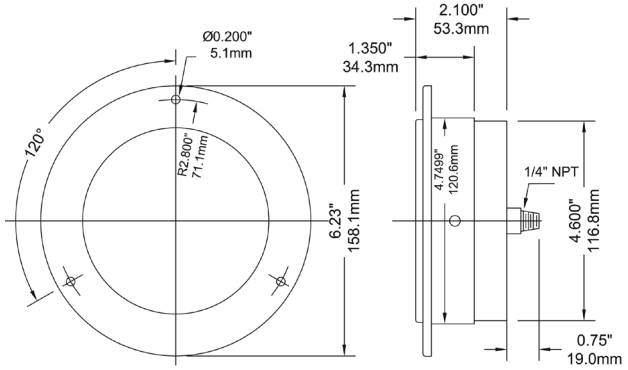


## 6” Bottom Connection Stainless Steel

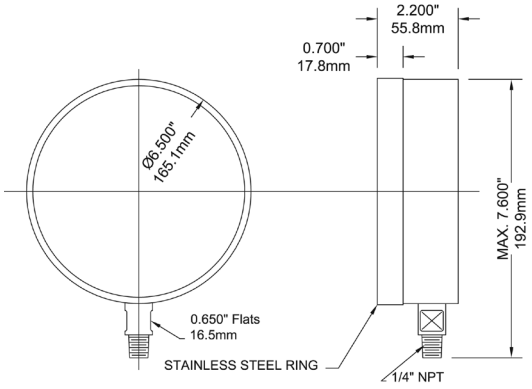


## 6” Back Connection Stainless Steel with Front Flange

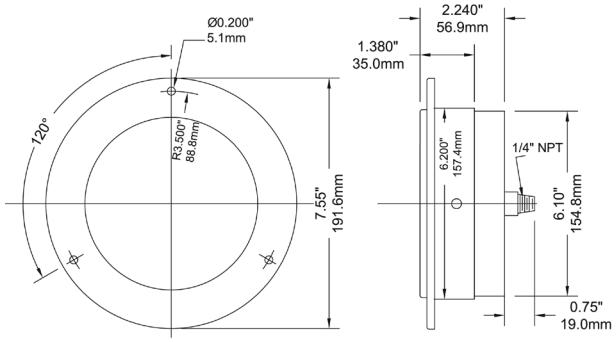


## Test Block

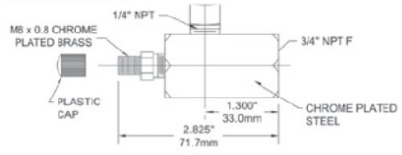

# PLP Low Pressure Gauge

## Engineering Codes

| PLP ENGINEERED PART NUMBER | | P L P - | | - | | - | | - | | - | | - | | - | | - | |
|---|---|---|---|---|---|---|---|---|---|---|---|---|---|---|---|---|---|
| **DIAL SIZE** | 2.5" (63mm) | | 2 5 | | | | | | | | | | | | | | |
| | 4" (100mm) | | 4 0 | | | | | | | | | | | | | | |
| | 4.5" (115mm) | | 4 5 | | | | | | | | | | | | | | |
| | 6" (160mm) | | 6 0 | | | | | | | | | | | | | | |
| **PRESSURE SCALE & RANGE** | SEE PRESSURE RANGES | | | | # # # | | | | | | | | | | | | |
| **CASE MATERIAL** | PLASTIC (ABS) | | | | | | P | | | | | | | | | | |
| | BLACK STEEL | | | | | | B S | | | | | | | | | | |
| | ALUMINUM | | | | | | A | | | | | | | | | | |
| | 304SS | | | | | | S | | | | | | | | | | |
| **WETTED PARTS** | BRASS/BRONZE | | | | | | | | B R | | | | | | | | |
| | 316SS | | | | | | | | S S | | | | | | | | |
| **PROCESS CONNECTION SIZE** | 1/4" | | | | | | | | | | N 4 | | | | | | |
| | 1/2" | | | | | | | | | | N 2 | | | | | | |
| | 3/8" | | | | | | | | | | N 3 | | | | | | |
| **PROCESS CONNECTION TYPE** | NPT | | | | | | | | | | | N | | | | | |
| | BSPP (G), PARALLEL | | | | | | | | | | | G | | | | | |
| | BSPT (R), TAPERED | | | | | | | | | | | R | | | | | |
| **PROCESS CONNECTION LOCATION** | BOTTOM, STEM | | | | | | | | | | | | B | | | | |
| | LOWER BACK | | | | | | | | | | | | L B | | | | |
| | CENTRE BACK | | | | | | | | | | | | C B | | | | |
| **ACCURACY %** | 3-2-3 | | | | | | | | | | | | | C | | | |
| | 1.6 | | | | | | | | | | | | | G | | | |
| **OPTIONS, LIST IN ALPHA-NUMERIC ORDER** | STYRENE-ACRYLONITRILE RESIN LENS | | | | | | | | | | | | | | R L | | |
| | POLYCARBONATE LENS | | | | | | | | | | | | | | P L | | |
| | GLASS LENS | | | | | | | | | | | | | | G L | | |
| | FRONT FLANGE | | | | | | | | | | | | | | F F | | |
| | BACK FLANGE | | | | | | | | | | | | | | B F | | |
| | U-CLAMP | | | | | | | | | | | | | | U C | | |
| | BLACK STEEL POLISHED RING | | | | | | | | | | | | | | B G | | |
| | ALUMINUM POLISHED RING | | | | | | | | | | | | | | A R | | |
| | RESTRICTOR SCREW | | | | | | | | | | | | | | R S | | |
| | RESTRICTED ORIFICE | | | | | | | | | | | | | | R O | | |
| | NO RESTRICTOR SCREW / ORIFICE | | | | | | | | | | | | | | N R | | |
| | OVER PRESSURE PROTECTION (PLP SERIES) | | | | | | | | | | | | | | O P | | |
| | EN-837 ON-DIAL | | | | | | | | | | | | | | E N | | |
| | ASME B40.100 ON-DIAL | | | | | | | | | | | | | | A S | | |
| | CUSTOM DIAL, SIMPLE | | | | | | | | | | | | | | C 1 | | |
| | CUSTOM DIAL, COMPLEX | | | | | | | | | | | | | | C 2 | | |
| | RED SET POINTER | | | | | | | | | | | | | | R S P | | |
| | SPECIAL | | | | | | | | | | | | | | Z # # # | | |

# Economy Test Gauge, Lead Free Economy Test Gauge — PET, PET-LF

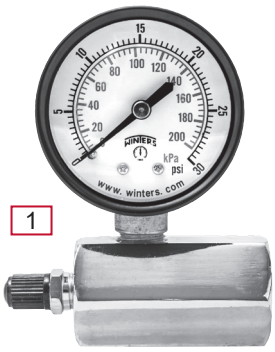





1. Gas Test Gauge
2. Water Test Gauge

## Description & Features:

- Economical pressure gauge and valve body assembly used for pressure testing
- Bleed port and plated housing on the gas test assembly
- Swivel hose adaptor on the Water Test Gauge
- Black steel case
- Brass or lead free brass wetted parts
- Dual scale (PSI/kPa)
- ±3-2-3% accuracy
- ASME B40.100 compliant
- CRN registered
- Lead free version NSF-61-372 certified
- 5 year warranty

## Applications:

- Residential & commercial pressure testing of natural gas, air and water lines
- Lead free version for potable water systems
- Suitable for non-clogging and non-corroding media

| Specifications | |
|---|---|
| **Dial** | 2” (50mm), 2.5” (63mm) white aluminum with black and red markings |
| **Case** | Steel painted black |
| **Lens** | PETG: Polycarbonate<br>PETM, PETM-LF, PETW, PETW-LF: Acrylic |
| **Ring** | Steel, painted black |
| **Bourdon Tube** | PET: Phosphor bronze<br>PET-LF: Lead free phosphor bronze, NSF-61-372 certified |
| **Movement** | PET: Brass,<br>PET-LF: SS |
| **Pointer** | Aluminum, black |
| **Connection** | PETG: 3/4” NPTF<br>PETM, PETM-LF, PETW, PETW-LF: 3/4” female swivel hose connection |
| **Maximum Pointer** | Available on Water Test Gauge only |
| **Welding** | #50 tin solder |
| **Gas Test Ambient/Process Temperature** | -40°F to 150°F (-40°C to 65°C) |
| **Water Test Ambient/Process Temperature** | 32°F to 150°F (0°C to 65°C) |
| **Working Pressure** | Maximum 75% of full scale value |
| **Accuracy** | ±3-2-3% ANSI/ASME Grade B |
| **Enclosure Rating** | IP52 |
| **Warning** | **WARNING:** This product can expose you to chemicals including lead, which is known to the State of California to cause cancer and birth defects or other reproductive harm. For more information go to www.P65Warnings.ca.gov. |

# PET, PET-LF | Economy Test Gauge, Lead Free Economy Test Gauge

## PET Order Codes (products in bold are normally stock in North America)

| Product | Gas Test Gauge | Water Test Gauge | Maximum Pointer Water Test Gauge |
|---|---|---|---|
| Dial Size | 2” (50mm) | 2.5” (63mm) | 2.5” (63mm) |
| Connection | Adapts to 3/4” NPTF | 3/4” Female Swivel Hose Connection | 3/4” Female Swivel Hose Connection |
| 0/15 psi | **PETG201** | - | - |
| 0/30 psi/kPa | **PETG202** | - | - |
| 0/60 psi/kPa | **PETG203** | - | - |
| 0/100 psi/kPa | **PETG204** | - | - |
| 0/160 psi/kPa | **PETG205** | **PETW213** | **PETM213** |
| 0/300 psi/kPa | - | **PETW217** | **PETM217** |

## PET-LF Order Codes (products in bold are normally stock in North America)

| Product | Water Test Gauge | Maximum Pointer Water Test Gauge |
|---|---|---|
| Dial Size | 2.5” (63mm) | 2.5” (63mm) |
| Connection | 3/4” Female Swivel Hose Connection | 3/4” Female Swivel Hose Connection |
| 0/160 psi/kPa | PETW213LF | **PETM213LF** |
| 0/300 psi/kPa | PETW217LF | **PETM217LF** |

Other ranges and connection sizes available upon request. For scale change, refer to How to Order Guide for scale codes.

### 2” Gas Test Gauge

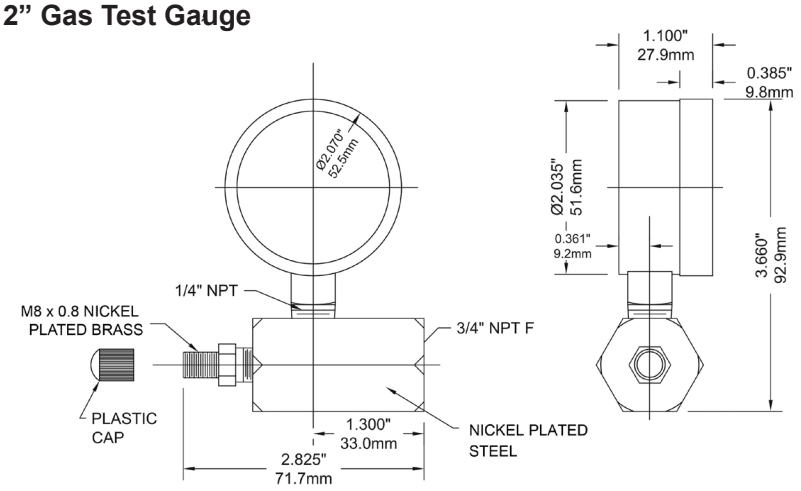


### 2.5” Water Test Gauge

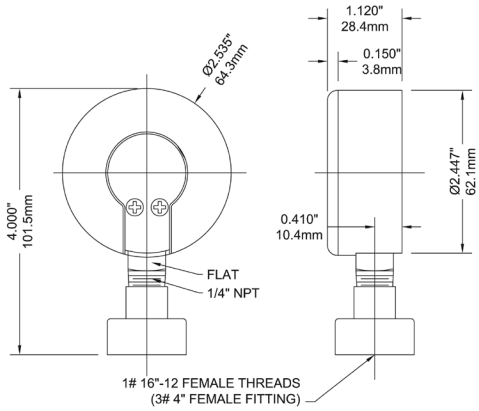

# PGTK | Gas Line Test Kit




## Description & Features:

- Highly accurate reading of low pressures
- Brass wetted parts
- Adjustable red set pointer
- Built in over pressure protection
- Restricted orifice
- ASME B40.100 compliant
- CRN registered
- 5 year warranty

## Applications:

- Suitable for measuring low pressure gas media
- Used to measure natural gas pressure as well as air flow indication and leak detection
- Low pressure pumps, air compressors, air filters, gas burners, ovens, regulators and respirators

| Specifications | |
|---|---|
| **Dial** | Dial 4” (100mm), white aluminum dial with black, blue and red markings |
| **Case** | Steel, painted black |
| **Lens** | Lens Polycarbonate with adjustable red set pointer |
| **Ring** | Steel |
| **Socket** | Brass |
| **Connection** | 1/4” NPTM gauge with 3/4” NPTF x M8x0.8 chrome plated test block |
| **Diaphragm Element** | Phosphor bronze |
| **Movement** | Brass |
| **Pointer** | Aluminum, anodized black |
| **Welding** | Solder/brazed |
| **Working Pressure** | 60% of full scale value (fluctuating)<br>75% of full scale value (static) |
| **Overload Protection** | 2X full scale value |
| **Ambient/Process Temperature** | -40°F to 150°F (-40°C to 65°C) |
| **Accuracy** | ±1% Grade 1A |
| **Enclosure Rating** | IP52 |
| **Warning** | **WARNING:** This product can expose you to chemicals including lead, which is known to the State of California to cause cancer and birth defects or other reproductive harm. For more information go to www.P65Warnings.ca.gov. |

**Order Codes (products in bold are normally stock in North America**

| Pressure Range | Code |
|---|---|
| 0/6 psi/Hg | **PGTK314CM.** |
| 0/15 psi/Hg | **PGTK315CM.** |

**Gauge**

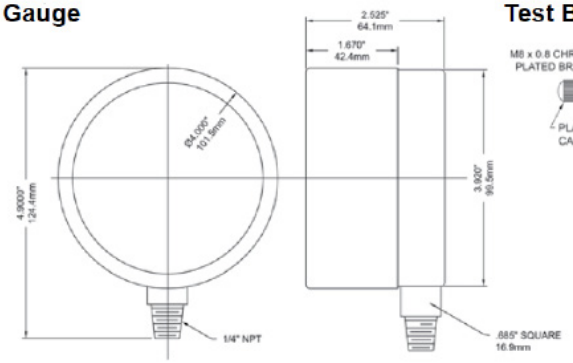


**Test Block**

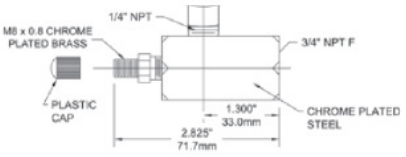

# PGWT | Low Pressure Gas and Water Test Kit



## Description & Features:

- Low and high pressure gauge kit in a protective plastic blow molded case
- Re-zero with external recalibration screw
- Plastic blow molded case for added durability
- Sleek design featuring secure latch
- Pump and fitting for simplified and quick connections
- ASME B40.100 compliant
- CRN registered
- 5 year warranty

## Applications:

- Portable leak and loss of pressure detection unit for gas and water lines

| Specifications | Gas Test Gauge (1) | Water Test Gauge (2) |
|---|---|---|
| Dial | 2.5” (63mm) white aluminum with black markings | 2” (50mm) white aluminum with black marking |
| Case/Ring | Steel, painted black with steel ring | Steel, painted black |
| Lens | Polycarbonate snap in | Polycarbonate |
| Connection | Rubber hand pump with hose and mini ball valve with handle and 1/2” NPTF x 1/4” NPTF test block and1/2” NPTM x 1/2” NPTM nipple | 3/4” NPTF x M8x0.8 test block with cap |
| Pressure Range | 0/5 psi | 0/160 psi |
| Movement | Engineered plastic upper and lower plate with brass pinion and secto | Brass |
| Pointer | Aluminum, anodized black | Aluminum, black |
| Ambient Temperature | -40ºF to 150ºF (-40ºC to 65ºC) | -40ºF to 150ºF (-40ºC to 65ºC) |
| Accuracy | ±3-2-3% ANSI/ASME Grade B | ±3-2-3% ANSI/ASME Grade B |
| Enclosure Rating | IP52 | IP52 |
| Case | Plastic blow molded (11.875” x 18”) | |
| Warning | ⚠ **WARNING:** This product can expose you to chemicals including lead, which is known to the State of California to cause cancer and birth defects or other reproductive harm. For more information go to www.P65Warnings.ca.gov. | |

**Order Codes (products in bold are normally stock in North America**

| Kit | Additional Hand Pump |
|---|---|
| **Case PGWT0100** | **PHPT0100** |

# PLPT | Low Pressure Gas Test Kit



## Description & Features:

- Low presseure gauge kit in a protective plastic blow molded case
- Re-zero with external recalibration screw
- Plastic blow molded case for added durability
- Sleek design featuring secure latch
- Pump and fittings for simplified and quick connections
- ASME B40.100 compliant
- CRN registered
- 5 year warranty

## Applications:

- Portable leak and loss of pressure detection unit for gas lines

| Gauge Specifications | |
|---|---|
| **Dial** | 2.5” (63mm) white aluminum with black markings |
| **Case/Ring** | Steel, painted black with steel ring |
| **Lens** | Polycarbonate snap in |
| **Connection** | Rubber hand pump with hose and mini ball valve with handle and 1/2” NPTF x 1/4” NPTF test block and 1/2” NPTM x 1/2” NPTM nipple, 1/2” NPTF x 3/4” NPTM adapter and 3/4” NPTF x 1” NPTM adapter |
| **Movement** | Engineered plastic upper and lower plate with brass pinion and sector |
| **Pointer** | Aluminum, anodized black |
| **Ambient Temperature** | -40ºF to 150ºF (-40ºC to 65ºC) |
| **Accuracy** | ±3-2-3% ANSI/ASME Grade B |
| **Enclosure Rating** | IP52 |
| **Case** | Plastic blow molded (11.875” x 18”) |
| **Warning** | ⚠ **WARNING:** This product can expose you to chemicals including lead, which is known to the State of California to cause cancer and birth defects or other reproductive harm. For more information go to www.P65Warnings.ca.gov |

| Case and Accessory Specifications | |
|---|---|
| **Hand Pump and Hose** | 10” rubber hose with hand pump |
| **Hose** | SMV series valve with forged brass body 1/4” NPTF x 1/4” NPTM |
| **Test Block** | Chrome plated steel |
| **Accessories** | Pressure fitting with easy to install clamp |
| **Nipple** | Carbon steel 1/2” NPTM |
| **Fittings** | Carbon steel 1/2” NPTF x 3/4” NPTM and 3/4” NPTF x 1” NPTM |
| **Warning** | ⚠ **WARNING:** This product can expose you to chemicals including lead, which is known to the State of California to cause cancer and birth defects or other reproductive harm. For more information go to www.P65Warnings.ca.gov |

## Order Codes (products shown in bold are typically stocked in the North America)

| Pressure Range | Code |
|---|---|
| 0/5 psi | **PLPT0005** |

# PLT Low Pressure Test Kit



## Description & Features:

- Low pressure gauge built into protective case for ease in use and durability
- Sensitive diaphragm gauge available in 3 pressure ranges
- Re-zero with external recalibration screw (PLT35 only)
- Easier to use than a manometer
- Plastic blow molded case for added durability
- Sleek design featuring secure latch
- Facilitates safe handling
- ASME B40.100 compliant
- CRN registered
- 5 year warranty

## Applications:

- Test kit for low pressure gas installations
- Suitable for non-clogging and non-corroding media

| Gauge Specifications | |
|---|---|
| **Dial** | 2.5" (63mm), white aluminum with red and black markings |
| **Case/Ring** | Steel, painted black |
| **Lens** | Polycarbonate |
| **Connection** | Brass hose barb (1/4") (gear clamp included) |
| **Diaphragm Element** | Phosphor bronze |
| **Movement** | Engineering plastic upper and lower plate with brass pinion and sector, with zero adjustment* |
| **Ambient Temperature** | -40°F to 150°F (-40°C to 65°C) |
| **Accuracy** | ±3-2-3% ANSI/ASME Grade B |
| **Enclosure Rating** | IP52 |
| **Warning** | ⚠ **WARNING:** This product can expose you to chemicals including lead, which is known to the State of California to cause cancer and birth defects or other reproductive harm. For more information go to www.P65Warnings.ca.gov. |

| Case and Accessory Specifications | |
|---|---|
| **Tube Nipple** | Rubber: 0.256" (6.5mm) ID x 0.472" (12mm) OD x 1.339" (34mm) 1/4" NPTM x 1/4" hose barb |
| **Case Material** | Plastic blow molded: 5.75" x 8.25" (146mm x 210mm) |
| **Hose Tube** | Rubber: 3' (91cm) in length; 0.197" (5mm) ID x 0.315" (8mm) OD |
| **Accessory** | Easy to install clamp |

## Order Codes (products in bold are normally stock in North America)

| Pressure Range | Code |
|---|---|
| 0/15" water / 0/8 oz/in$^2$ | PLT15 |
| 0/35" water / 0/20 oz/in$^2$ | **PLT35** |
| 0/100" water / 0/58 oz/in$^2$ | PLT100 |

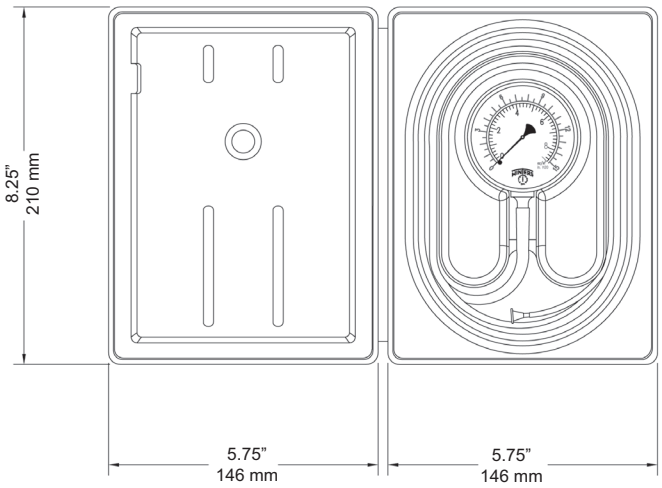

# PTK Pressure and Temperature Kit

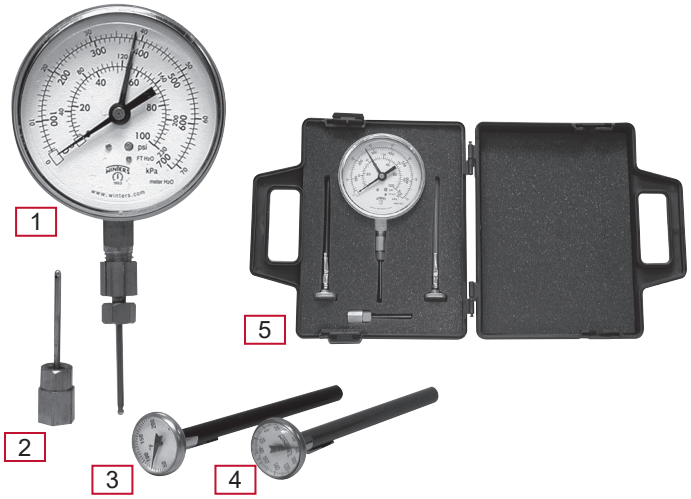


**Kit Contents**

1. Gauge
2. Gauge Adaptor
3. Bimetal Pocket Thermometer 0°F to 250°F (-17°C to 121°C)
4. Bimetal Pocket Thermometer -40°F to 160°F (-40°C to 71°C)
5. Carrying Case

## Description & Features:

- A portable kit with durable carrying case to protect the test instruments between uses and test locations
- Includes two thermometers for high or low temperature tests
- Pressure gauge includes secondary adjustable set pointer to assist the operator in pressure test evaluations
- Hardened stainless steel gauge adaptor probe for test plug insertion
- Eliminates the need for costly, permanently installed pressure gauges or recording devices
- Multi-scale (psi/ft $H_2O$/kPa/meters $H_2O$) pressure gauge dial face for acceptance in a variety of applications
- CRN registered
- 5 year warranty

## Applications:

- To determine pressure or temperature levels where test plugs are installed in the process
- Used at start-up or periodic testing of pipelines or pressure vessels
- Chilled and hot water systems, refrigeration and hydronics, pneumatics, prototype equipment, new building construction, building maintenance

| Specifications | |
|---|---|
| **Case** | Black plastic with custom cut foam inserts for parts |
| **Pressure Gauge** | 3.5” (90mm) dial, brass wetted, 0-100 psi/Ft $H_2O$/kPa/meters $H_2O$, 1/4” NPT bottom with attached gauge adaptor<br>±2-1-2% ANSI/ASME Grade A, red stationary pointer |
| **Gauge Adaptor (picture #2)** | 1.75” (45mm) x 0.125” (3mm) SS probe with 1/4” NPTF swivel gauge fitting |
| **Thermometer (picture #3)** | 1” (25mm) dial, 5” (127mm) x 0.142” (4mm) stem, includes plastic sheath<br>±1% accuracy<br>Range: 0°F to 250°F (-17°C to 121°C) |
| **Thermometer (picture #4)** | 1” (25mm) dial, 5” (127mm) x 0.142” (4mm) stem, includes plastic sheath<br>±1% accuracy<br>Range: -40°F to 160°F (-40°C to 71°C) |
| **Warning** | ⚠ **WARNING:** This product can expose you to chemicals including lead, which is known to the State of California to cause cancer and birth defects or other reproductive harm. For more information go to www.P65Warnings.ca.gov. |

## Order Codes

| Kit Code |
|---|
| PTK1500 |

| Code | Specifications Pressure Gauge |
|---|---|
| P9S90223R99STAT | 3.5”, 1/4 NPT bottom, 0/100 psi |

Note: Contact Winters for gauges under 500 psi

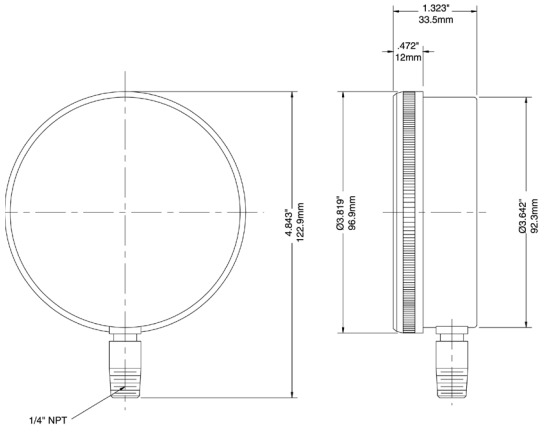


| Code | Specifications Gauge Adaptor |
|---|---|
| STP003 | 2.75” x 1.75” x 0.125” probe |

Optional Adaptor: STP004 = 2.25” x 1.75” x 0.125” probe

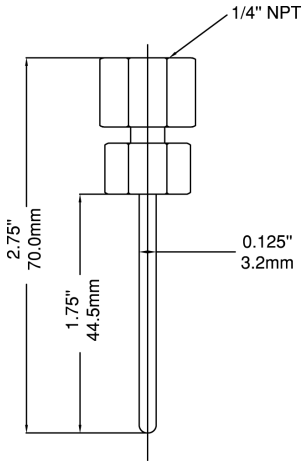


| Bimetal Pocket Thermometer | | |
|---|---|---|
| **Product Code** | **Temperature Range** | **Specifications** |
| TBM10050B15 | -40°F to 160°F only | 1” dial, 5” stem |
| TBM10050B19 | 0°F to 250°F only | 1” dial, 5” stem |

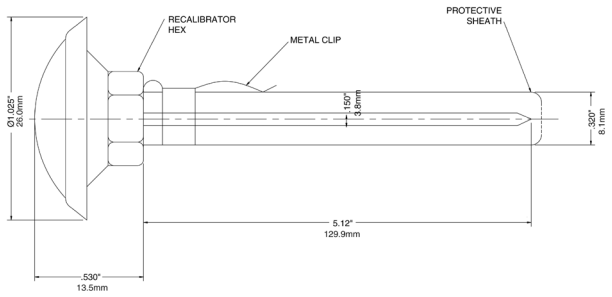


**Optional Pocket Thermometers:**

TBM10050B14 = -40° to 120°F (F only)
TBM10050B17 = 0° to 200°F (F only)
TBM10050B22 = 50° to 550°F (F only)
TBM10050B4 = -40° to 160°F (Dual scale)
TBM10050B8 = 0° to 250°F (Dual scale)
TBM10050B11 = 50° to 550°F (Dual scale)
TBM10050B12 = 150 to 750°F (Dual scale)
TBM10050B31 = -20° to 120°C (C only)
TBM10050B33 = 0° to 200°C (C only)

# Thermometer Selection Guide

| Catalogue Page | Series | Dial Size | | | | | | | | Scale Size | | | | | Case Material | | | | | Wetted Parts | | Connection Size | | | Accuracy | | | | | | |
|---|---|---|---|---|---|---|---|---|---|---|---|---|---|---|---|---|---|---|---|---|---|---|---|---|---|---|---|---|---|---|
| | | ≤2" | 2.5" | 3" | 3.5" | 4" | 4.5" | 5" | ≥6" | 4.5" | 5" | 6" | 8" | 9" | Steel | SS | Aluminum | Valox®* | Plastic | Brass | SS | 1/4" NPT | 1/2" NPT | 3/4" NPT | 1% (Grade A) | 2% (Grade B) | 2.5% (Grade B) | 3% (Grade B) | With thermowell | RoHS compliant | Lead Free Option |
| 195 | TAG HVAC Gold Case Thermometer | | | | | | | | | x | | x | | | | | x | | | x | x | | x | | | x | | | x | | |
| 197 | TAS/TAS-LF Industrial/Lead Free Industrial 5" Thermometer | | | | | | | | | | x | | | | | | | | x | x | | | x | | | x | | | x | x | x |
| 199 | TBM Bi-Metal Thermometer | x | | x | | x | | x | x | | | | | | | x | | | | | x | x | x | | x | | | | x | |
| 204 | TBT HVAC Bi-Metal Thermometer | | | | x | | | | | | | | | | x | | | | | x | | | x | | | x | | | | | |
| 205 | TCT Clamp-On Thermometer | | x | | | | | | | | | | | | x | | | | | | | | | | | | | x | | | |
| 206 | THR HVAC Remote Reading Thermometer | x | x | | | | | | | | | | | | | x | | | | x | | | | | | | x | | | | |
| 208 | THS Solar Digital Bi-Metal Thermometer | | | x | | | | | | | | | | | | x | | | | | x | | x | | x | | | | | x | |
| 209 | TIM/TIM-LF Industrial/Lead Free Industrial 9" Thermometer | | | | | | | | | | | | | x | | | x | x | | x | | | | x | x | | | | x | x | x |
| 211 | TMT Surface Magnet Thermometer | x | | | | | | | | | | | | | x | | | | | | | | | | | x | | | | | |
| 212 | TNR Food & Beverage Bi-Metal Thermometer | | | x | | | | | | | | | | | | x | | | | | x | | x | | x | | | | | x | |
| 213 | TRR Gas or Vapour Remote Reading Thermometer | | x | | x | x | x | | x | | | | | | x | x | x | | | x | x | | x | x | x | x | | | | x | |
| 219 | TSD Industrial Solar Digital | | | | | | | | | x | | | | | | | | | x | x | | | | x | x | | | | x | x | |
| 221 | TSW/TSW-LF Hot Water/Lead Free Hot Water Thermometer | x | x | | | | | | | | | | x | | x | | x | | | x | | | x | | x | | | | x | | x |
| 223 | TTD Tridicator | | x | x | | | | | | | | | | | x | | | | | x | | x | x | | | | | x | | | |

Valox® is a registered trademark of the General Electric Company

**Note: When selecting a thermometer, always refer to ASME B40.200 (2008)**

# TAG HVAC Gold Case Thermometer




## Description & Features:

- Available in 4.5” (115mm) or 6” (150mm) scales
- Brass socket 1/2” NPT is standard (stainless steel optional)
- Available in either a straight model (bottom connection) or 90° angle model (back connection)
- ASME B40.200 and ASTM E2251 compliant
- 5 year warranty

## Applications:

- Heating, plumbing, air conditioning and ventilation applications

| Specifications | |
|---|---|
| **Scale** | Aluminum, black markings |
| **Case** | 4.5” (115 mm), 6” (150 mm) aluminum, anodized gold |
| **Tube** | Glass, cushioned |
| **Liquid Filling** | Organic liquid red (other colors available) |
| **Stem** | Brass (SS optional) |
| **Connection** | 1/2” NPT (1/2” BSP optional) |
| **Swivel Nut** | Brass (SS optional; swivel and stem one unit) |
| **Ambient/Process Temperature** | -40°F to 400°F (-40°C to 204°C) |
| **Operating Temperature** | Maximum 80% of full scale value recommended |
| **Accuracy** | ±2% of full scale |
| **Enclosure Rating** | IP65 |
| **Warning** | ⚠ **WARNING:** This product can expose you to chemicals including lead, which is known to the State of California to cause cancer and birth defects or other reproductive harm. For more information go to www.P65Warnings.ca.gov. |

## Order Codes

| | Straight | | Angle | |
|---|---|---|---|---|
| **Range** | **4.5” (110mm)** | **6” (150mm)** | **4.5” (110mm)** | **6” (150mm)** |
| -40°F to 110°F & -40°C to 40°C | TAG130AG4 | TAG130AG6 | TAG140AG4 | TAG140AG6 |
| 20°F to 180°F & -5°C to 80°C | TAG131AG4 | TAG131AG6 | TAG141AG4 | TAG141AG6 |
| 30°F to 240°F & 0°C to 115°C | TAG132AG4 | TAG132AG6 | TAG150AG4 | TAG150AG6 |
| 30°F to 300°F & 0°C to 150°C | TAG134AG4 | TAG134AG6 | TAG143AG4 | TAG143AG6 |
| 50°F to 400°F & 10°C to 210°C | TAG133AG4 | TAG133AG6 | TAG142AG4 | TAG142AG6 |

Other ranges and connection sizes available upon request. 304 SS thermowell available upon request.

# TAG HVAC Gold Case Thermometer

## Angle

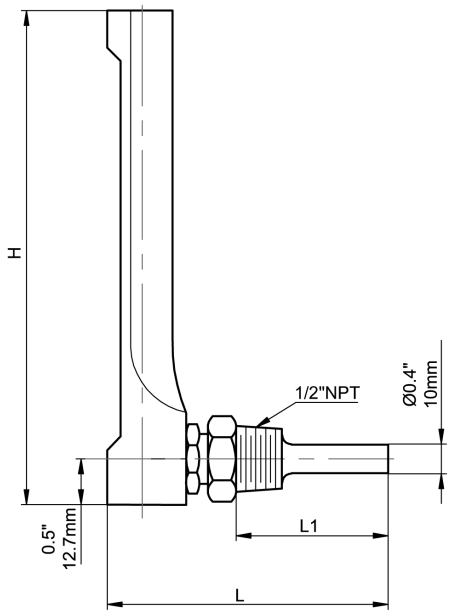


## Straight

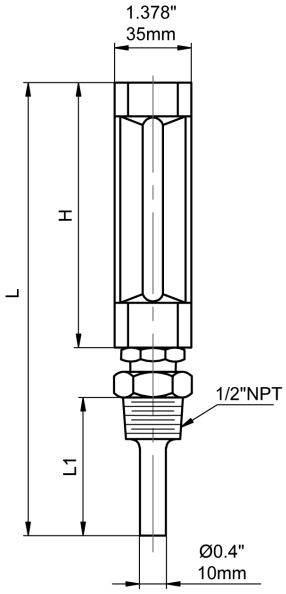


## Dimensions

| Case Height (H) | Stem Length (L1) | L (Angle) | L (Straight) |
|---|---|---|---|
| 4.5” (114mm) | 2” (50.8mm) | 3.69” (93.7mm) | 7.17” (182.1mm) |
| 6” (152.4mm) | | | 8.67” (220.2mm) |

# TAG HVAC Gold Case Thermometer

## Engineering Codes

| TAG SERIES | | TAG - [ ][ ] - [ ][ ][ ] - [ ] - [ ][ ] - [ ][ ] - [ ][ ] - [ ][ ] - [ ] - [ ] - [ ][ ][ ][ ] |
|---|---|---|
| **SCALE SIZE** | 4.5" (115mm) | 4 5 |
| | 6" (160mm) | 6 0 |
| | 8" (200mm) | 8 0 |
| **PRESSURE SCALE & RANGE** | SEE TEMPERATURE RANGES BELOW | # # # |
| **CASE MATERIAL** | ALUMINUM | A |
| | PLASTIC (ABS) | P |
| **WETTED PARTS** | BRASS/BRONZE | B R |
| | 304SS | S |
| **PROCESS CONNECTION SIZE (MALE)** | 1/2" | N 2 |
| | 3/8" | N 3 |
| | 3/4" | N 5 |
| **PROCESS CONNECTION TYPE** | NPT | N |
| | BSPP (G), PARALLEL | G |
| | BSPT (R), TAPERED | R |
| | M20*1.5 | M 2 |
| **PROCESS CONNECTION LOCATION** | BOTTOM, STEM | B |
| | ANGLE, BACK | A B |
| **STEM LENGTH** | 2" | 1 |
| | 3" | 3 |
| | 4" | 4 |
| **ACCURACY %** | 2.0 | E |
| **OPTIONS, LIST IN ALPHA-NUMERIC ORDER** | THERMOWELL BRASS | T B |
| | THERMOWELL BRASS LEAD FREE | T L F |
| | THERMOWELL 304SS | T S |
| | THERMOWELL 316SS | T S S |
| | ROSH COMPLIANT | R |
| | SPECIAL | Z # # # |

## Temperature Ranges

| F & C, DUAL SCALE | CODE |
|---|---|
| -40/110°F/C | T10 |
| -20/160°F/C | T11 |
| 10/140°F/C | T12 |
| 20/180°F/C | T13 |
| 30/120°F/C | T14 |
| 30/140°F/C | T15 |
| 30/240°F/C | T16 |
| 30/300°F/C | T17 |
| 50/400°F/C | T18 |

# TAS, TAS-LF — Industrial 5” Thermometer, Lead Free Industrial 5” Thermometer




## Description & Features:

- An all-purpose, economical thermometer with a vertical sensing tube and case
- Separable brass, lead free brass or stainless steel thermowell
- Impact resistant ABS case
- Red liquid-in glass
- Dual scale (°F & °C)
- Straight or angle connection
- 1/2” NPT process connection
- ASME B40.200 and ASTM E2251 compliant
- 5 year warranty

## Applications:

- Hot water lines, boilers, heating, ventilation and air conditioning
- Lead free version for potable water systems

LEAD FREE

RoHS compliant

Note: RoHS applies only to SS thermowell

| Specifications | |
|---|---|
| **Scale** | Aluminum, painted white with black markings |
| **Case** | 5” (127mm) black ABS |
| **Lens** | Glass |
| **Tube** | Glass, cushioned |
| **Sensing Liquid** | Kerosene, tinted red (other colors available) |
| **Stem** | Brass |
| **Thermowell** | TAS: Brass 1/2” NPT standard, (3/4” and SS optional)<br>TAS-LF: Lead free brass 1/2” NPT (3/4” optional) |
| **Operating Pressure** | Maximum 710 psi (4,895 kPa) |
| **Ambient Temperature** | -40°F to 122°F (-40°C to 50°C) |
| **Process Temperature** | -40°F to 400°F (-40°C to 204°C) |
| **Accuracy** | ±2% of full scale |
| **Enclosure Rating** | IP50 |
| **Warning** | **WARNING:** This product can expose you to chemicals including lead, which is known to the State of California to cause cancer and birth defects or other reproductive harm. For more information go to www.P65Warnings.ca.gov. |

# TAS, TAS-LF

# Industrial 5” Thermometer, Lead Free Industrial 5” Thermometer

### TAS Order Codes (products in bold are normally stock in North America)

| Range | Straight | Angle |
|---|---|---|
| -40°F to 110°F & -40°C to 40°C | **TAS130** | **TAS140** |
| 20°F to 180°F & -5°C to 80°C | **TAS131** | **TAS141** |
| 30°F to 240°F & 0°C to 115°C | **TAS132** | **TAS150** |
| 30°F to 300°F & 0°C to 150°C | TAS134 | **TAS143** |
| 50°F to 400°F & 10°C to 200°C | TAS133 | TAS142 |

### Thermowell

| Connection | Material | Code |
|---|---|---|
| 1/2“ NPT - Standard (Included with thermometer) | Brass | TAS62 |
| 1/2“ NPT - Optional | 304 SS | TAS62-1 |
| 3/4“ NPT - Optional | Brass | TAS64 |
| 3/4“ NPT - Optional | 304 SS | TAS64-1 |

### TAS-LF Order Codes (products in bold are normally stock in North America)

| Range | Straight | Angle |
|---|---|---|
| -40°F to 110°F & -40°C to 40°C | TAS130LF | TAS140LF |
| 20°F to 180°F & -5°C to 80°C | TAS131LF | TAS141LF |
| 30°F to 240°F & 0°C to 115°C | TAS132LF | **TAS150LF** |
| 30°F to 300°F & 0°C to 150°C | TAS134LF | TAS143LF |
| 50°F to 400°F & 10°C to 200°C | TAS133LF | TAS142LF |

### Thermowell (products in bold are normally stock in North America)

| Connection | Material | Code |
|---|---|---|
| 1/2“ NPT - Standard (Included with thermometer) | Brass | **TAS62LF** |
| 3/4“ NPT - Optional | Brass | TAS64LF |

Other ranges and connection sizes available upon request. 304 SS thermowell available upon request. Plastic lens available upon request. 3/4” NPT connection available upon request.

### Straight

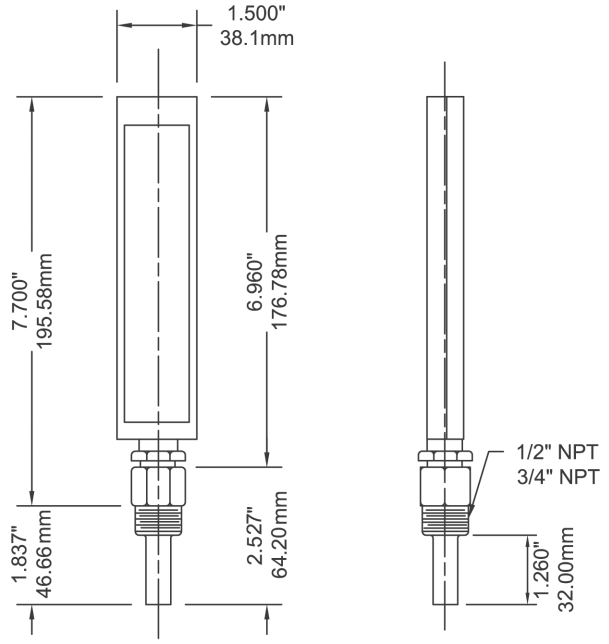


### Angle

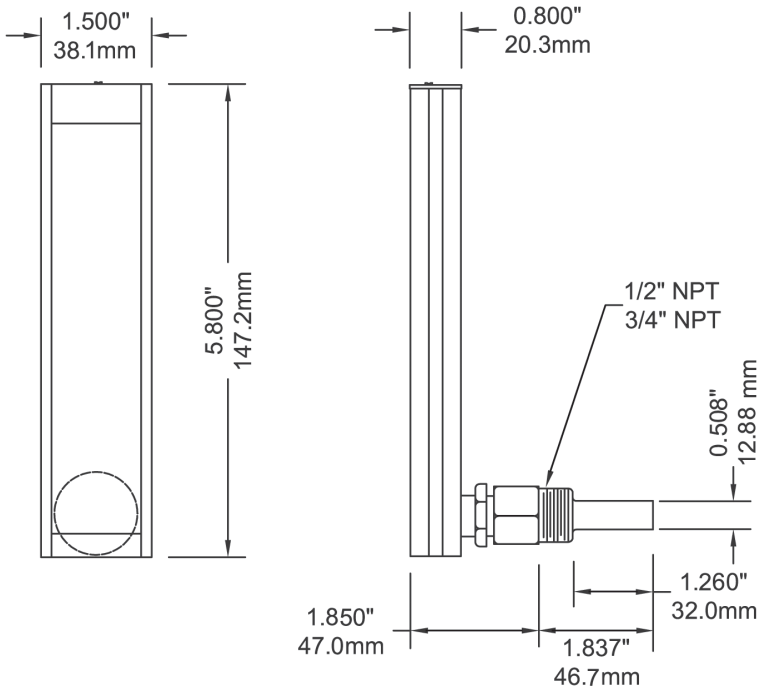

# TBM Bi-Metal Thermometer




## Description & Features:

- A general purpose, versatile 1” (25mm) to 6” (150mm) dial, 304 stainless steel thermometer
- Bi-metallic sensing element for reliable readings
- Back, bottom or adjustable angle connection
- Welded stem length from 2.5” (63mm) and up
- ±1% accuracy
- Anti-parallax dial that reduces operator reading errors (3” (75mm)-6” (150mm))
- Recalibrator screw is standard on all dial sizes
- Use with TBR or TWF thermowells
- ASME B40.200 compliant
- 5 year warranty

## Applications:

- Industrial process, heating and air conditioning, ventilation and waste water
- Commercial installations such as barbecues, home brewing systems and cooking devices

| Specifications | |
|---|---|
| **Dial** | 1” (25mm), 2” (50mm): Aluminum with black markings, flat dial<br>3” (75mm), 4” (100mm), 5” (127mm), 6” (150mm): Aluminum with black markings, anti-parallax dial |
| **Case** | AISI 304 SS |
| **Stem** | AISI 304 SS welded to socket, centre back, bottom or adjustable angle configurations (316 SS optional*)<br>1” (25mm), 2” (50mm) dial: Centre back connection only |
| **Recalibrator Screw** | Standard |
| **Lens** | 1” (25mm): Polycarbonate<br>Others: Glass standard, hermetically sealed |
| **Ring** | AISI 304 SS |
| **Connection** | 1” (25mm): None<br>2” (50mm): 1/4” NPT standard<br>3” (75mm), 4” (100mm), 5” (127mm), 6” (150mm): 1/2” NPT standard |
| **Sensing Element** | Bi-metallic coil |
| **Pointer** | Aluminum, painted black |
| **Maximum Operating Pressure** | 125 psi (861 kPa) |
| **Operating Temperature** | 75% of full scale value (recommended maximum) |
| **Ambient Temperature** | -58°F to 248°F (-50°C to 120°C) |
| **Accuracy** | ±1% of full scale |
| **Enclosure Rating** | 2” (50mm) to 6” (150mm): IP68, 1” (25mm): IP52 |

Note: The use of a thermowell is recommended to protect the thermometer in corrosive or pressure applications, as well as to maintain a closed system during its removal from the process

# TBM Bi-Metal Thermometer

**Order Codes:** To order, specify the code for each dial/stem length and the range: i.e. TBM20025 - B26

| Dial Size | Stem Length | Fixed Centre Back | Bottom | Adjustable Angle |
|---|---|---|---|---|
| 1" (25mm) pocket thermometer | 5" (127mm) | TBM10050 | - | - |
| 2" (50mm) lab thermometer | 8" (200mm) | TBM20080 | - | - |
| 2" (50mm) | 2.5" (63mm) | TBM20025 | - | - |
| | 4" (100mm) | TBM20040 | - | - |
| | 6" (150mm) | TBM20060 | - | - |
| | 9" (230mm) | TBM20090 | - | - |
| | 12" (300mm) | TBM20120 | - | - |
| | 15" (370mm) | TBM20150 | - | - |
| 3" (75mm) | 2.5" (63mm) | TBM30025 | TBM31025 | TBM32025 |
| | 4" (100mm) | TBM30040 | TBM31040 | TBM32040 |
| | 6" (150mm) | TBM30060 | TBM31060 | TBM32060 |
| | 9" (230mm) | TBM30090 | TBM31090 | TBM32090 |
| | 12" (300mm) | TBM30120 | TBM31120 | TBM32120 |
| | 15" (370mm) | TBM30150 | TBM31150 | TBM32150 |
| 4" (100mm) | 2.5" (63mm) | TBM40025 | TBM41025 | TBM42025 |
| | 4" (100mm) | TBM40040 | TBM41040 | TBM42040 |
| | 6" (150mm) | TBM40060 | TBM41060 | TBM42060 |
| | 9" (230mm) | TBM40090 | TBM41090 | TBM42090 |
| | 12" (300mm) | TBM40120 | TBM41120 | TBM42120 |
| | 15" (370mm) | TBM40150 | TBM41150 | TBM42150 |
| 5" (127mm) | 2.5" (63mm) | TBM50025 | TBM51025 | TBM52025 |
| | 4" (100mm) | TBM50040 | TBM51040 | TBM52040 |
| | 6" (150mm) | TBM50060 | TBM51060 | TBM52060 |
| | 9" (230mm) | TBM50090 | TBM51090 | TBM52090 |
| | 12" (300mm) | TBM50120 | TBM51120 | TBM52120 |
| | 15" (370mm) | TBM50150 | TBM51150 | TBM52150 |
| 6" (150mm) | 2.5" (63mm) | TBM60025 | TBM61025 | TBM62025 |
| | 4" (100mm) | TBM60040 | TBM61040 | TBM62040 |
| | 6" (150mm) | TBM60060 | TBM61060 | TBM62060 |
| | 9" (230mm) | TBM60090 | TBM61090 | TBM62090 |
| | 12" (300mm) | TBM60120 | TBM61120 | TBM62120 |
| | 15" (370mm) | TBM60150 | TBM61150 | TBM62150 |

Other ranges, stem lengths and connection sizes available upon request.

Note: The use of a thermowell is recommended to protect the thermometer from corrosive or damaging environments, as well as to maintain a closed system during its removal from the process

## Temperature Ranges

| F & C, DUAL SCALE | CODE |
|---|---|
| -100/160°F & -70/70°C | B1 |
| -40/120°F & -40/50°C | B2 |
| 0/140°F & -20/60°C | B3 |
| -40/160°F & -40/70°C | B4 |
| 25/125°F & - 5/50°C | B5 |
| 0/200°F & -20/90°C | B6 |
| 20/240°F & - 5/115°C | B7 |
| 0/250°F & -20/120°C | B8 |
| 50/300°F & 10/150°C | B9 |
| 50/400°F & 10/200°C | B10 |
| 50/500°F & 10/ 260°C | B11 |
| 150/750°F & 70/400°C | B12 |
| 200/1,000°F & 100/550°C | B13 |
| 14/140°F & -10/60°C | B37 |
| 32/212°F & 0/100°C | B52 |
| 32/140°F & 0/60°C | B84 |
| -60/300°F & -50/150°C | B86 |

| F, SINGLE SCALE | CODE |
|---|---|
| -40/120°F | B14 |
| -40/160°F | B15 |
| 0/140°F | B16 |
| 0/200°F | B17 |
| 20/240°F | B18 |
| 0/250°F | B19 |
| 50/300°F | B20 |
| 50/400°F | B21 |
| 50/550°F | B22 |
| 150/750°F | B23 |
| 0/800°F | B24 |
| 200/1,000°F | B25 |
| 14/140°F | B38 |
| -80/120°F | F60 |
| -80/240°F | F61 |
| -20/120°F | F62 |
| 30/300°F | F63 |
| 30/400°F | F64 |
| 100/800°F | F65 |
| 200/1,000°F | F66 |

| C & F, DUAL SCALE | CODE |
|---|---|
| -30/70ºC & -20/150ºF | B75 |
| 0/120ºC & 30/250ºF | B76 |
| 0/300ºC & 30/570ºF | B77 |
| 0/200ºC & 30/400ºF | B79 |
| 0/250ºC & 30/480ºF | B80 |
| 0/50ºC & 30/120ºF | B81 |
| -20/60ºC & -4/140ºF | B85 |

| C, SINGLE SCALE | CODE |
|---|---|
| -80/50°C | B26 |
| -50/50°C | B27 |
| 0/50°C | B28 |
| 50/100°C | B29 |
| 0/100°C | B30 |
| -20/120°C | B31 |
| 0/150°C | B32 |
| 0/200°C | B33 |
| 0/300°C | B34 |
| 0/ 450°C | B35 |
| 100/550°C | B36 |
| 0/500°C | B39 |
| -10/60°C | B40 |
| 100/400°C | B41 |
| 100/540°C | B42 |
| -30/70°C | B45 |
| 20/120°C | B46 |
| -30/170°C | B47 |
| 0/120°C | B48 |
| 0/400°C | B49 |
| 0/250°C | B50 |
| 20/60°C | B51 |
| -20/ 60°C | B53 |
| 0/60°C | B82 |
| -10/60°C | B87 |
| 10/60°C | B88 |
| -70/70°C | B89 |
| -70/30°C | B90 |
| -50/100°C | B91 |
| -50/300°C | B92 |
| -50/500°C | B93 |
| -40/60°C | B94 |
| -40/80°C | B95 |
| -40/160°C | B96 |
| -30/50°C | B97 |
| -30/70°C | B98 |
| -20/80°C | B99 |
| -20/100°C | B100 |
| -20/140°C | B101 |
| -10/50°C | B102 |
| 0/80°C | B103 |
| 0/160°C | B104 |
| 0/600°C | B105 |

### 1” Back Connection

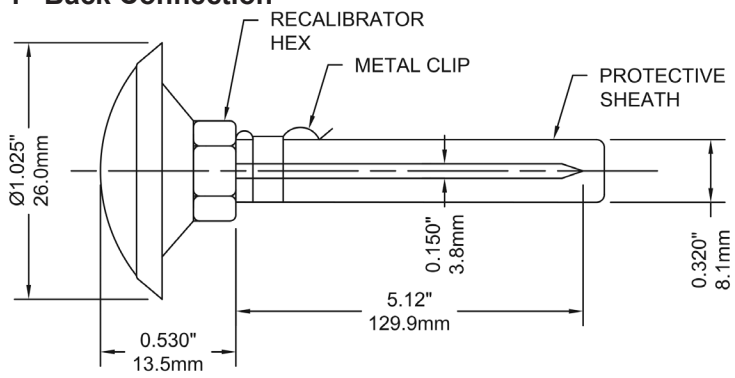


### 2” Back Connection

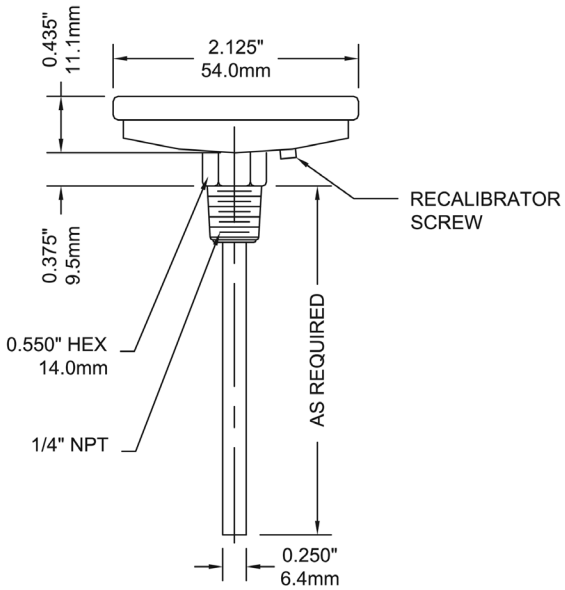


### 3” Adjustable Angle Connection

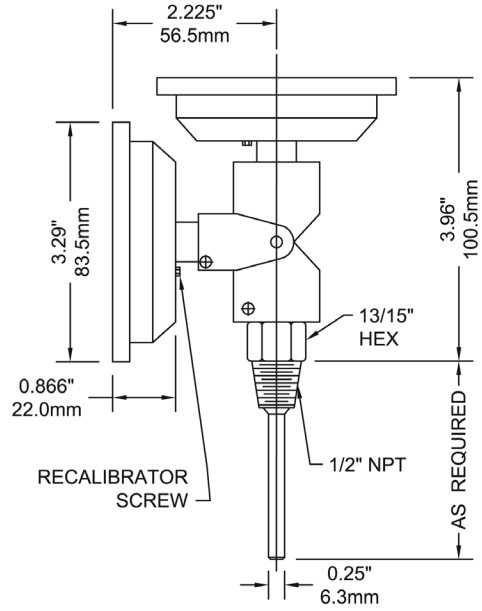


### 4” Back Connection

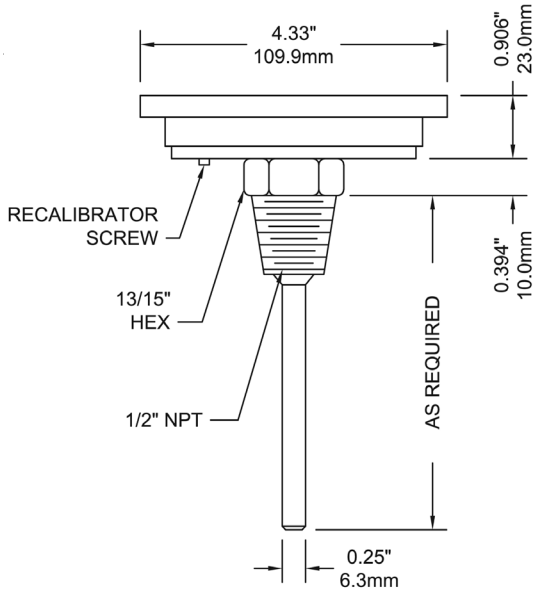

## 5” Bottom Connection

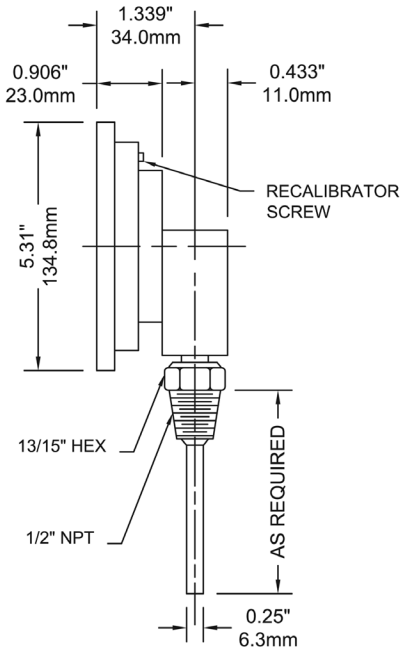


## 5” Adjustable Angle Connection

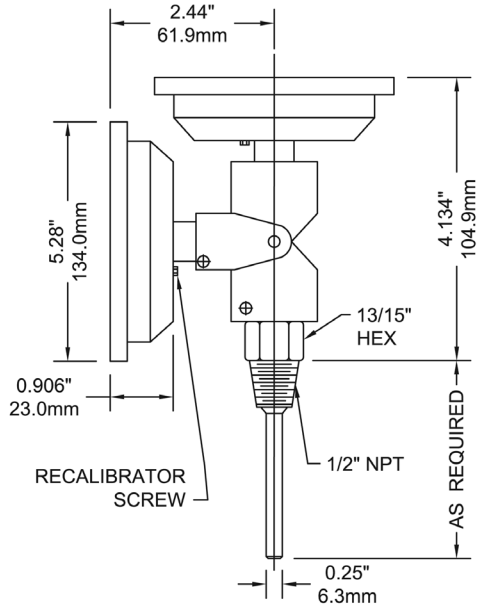


## 6” Back Connection

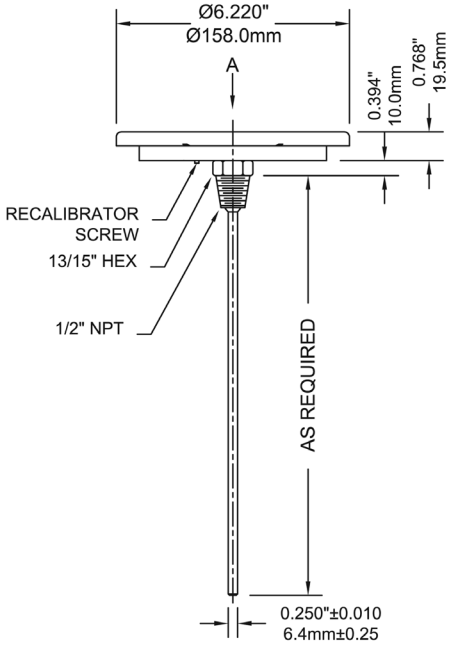


## 6” Bottom Connection

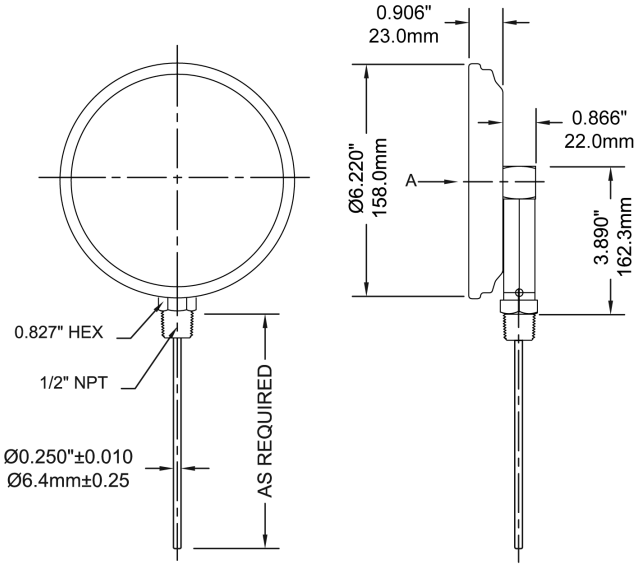

# TBM Bi-Metal Thermometer

## Engineering Codes

| TBM SERIES | | T B M - □□ - □□□ - □□ - □ - □□ - □ - □□ - □□ - □ - □ - □□□□ |
|---|---|---|
| **DIAL SIZE** | 1" (25MM) | 1 0 |
| | 2" (50MM) | 2 0 |
| | 3" (75mm) | 3 0 |
| | 4" (100mm) | 4 0 |
| | 5" (125mm) | 5 0 |
| | 6" (160mm) | 6 0 |
| **PRESSURE SCALE & RANGE** | SEE TEMPERATURE RANGES | # # # |
| **CASE MATERIAL** | 304SS | S |
| | 316SS | S S |
| **WETTED PARTS** | 304SS | S |
| | 316SS | S S |
| | 316L | S L |
| **PROCESS CONNECTION SIZE (MALE)** | 1/4" | N 4 |
| | 3/8" | N 3 |
| | 1/2" | N 2 |
| | 1/2" SLIDING UNION | S 2 |
| | 3/4" | N 5 |
| **PROCESS CONNECTION TYPE** | NPT | N |
| | BSPP (G), PARALLEL | G |
| | BSPT (R), TAPERED | R |
| **PROCESS CONNECTION LOCATION** | BOTTOM, STEM | B |
| | CENTRE Back | C B |
| | CENTRE Back, ADJUSTABLE | C A |
| **STEM LENGTH** | 2.5" | 2 |
| | 4" | 4 |
| | 6" | 6 |
| | 9" | 9 |
| | 12" | 1 2 |
| | 15" | 1 5 |
| | 18" | 1 8 |
| | 24" | 2 4 |
| | 30" | 3 0 |
| | 36" | 3 6 |
| **STEM DIAMETER (MM)** | 6 | 6 |
| | 6.3 (STANDARD) | 6 3 |
| | 8 | 8 |
| | 10 | 1 0 |
| | 12 | 1 2 |
| | 14 | 1 4 |
| **ACCURACY %** | 3-2-3 | C |
| | 1.0 | I |
| **OPTIONS, LIST IN ALPHA-NUMERIC ORDER** | ACRYLIC LENS | A L |
| | POLYCARBONATE LENS | P L |
| | SAFETY GLASS, LAMINATED | S G |
| | SAFETY GLASS, TEMPERED | T G |
| | GLYCERIN FILL (FOOD GRADE) | G F |
| | GLYCERIN WATER FILL | G W |
| | SILICONE FILL | S F |
| | ALUMINUM DUCT FLANGE | D U C T |
| | SOCKET CONVERSTION KIT | S C K |
| | CUSTOM DIAL, SIMPLE | C 1 |
| | CUSTOM DIAL, COMPLEX | C 2 |
| | WHITE DIAL | W D |
| | MAXIMUM ADJUSTABLE POINTER | M A X |
| | MINIMUM ADJUSTABLE POINTER | M I N |
| | RED SET POINTER | R S P |
| | NO RECALIBRATION SCREW | N C |
| | 316SS POLISHED RING | 6 R |
| | 316L POLISHED RING | L R |
| | POINTED STEM (2" ONLY) | P T |
| | ROSH COMPLIANT | R |
| | NACE COMPLIANT | N |
| | SPECIAL | Z # # # |

# TBT HVAC Bi-Metal Thermometer

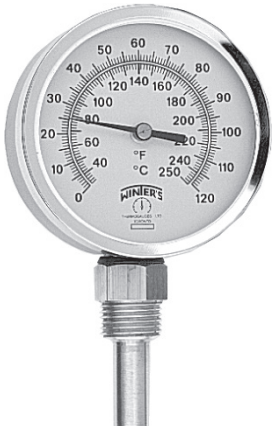


## Description & Features:

- A durable and accurate thermometer with a rigid connection
- Separable thermowell
- Rugged steel case
- Bi-metallic element
- Dual scale (°F & °C)
- Back or bottom connected
- 1/2" NPT process connection
- ASME B40.200 compliant
- 5 year warranty

## Applications:

- Hot water lines, boilers and hydronic heating

| Specifications | |
|---|---|
| **Dial** | 3.5" (90mm), aluminum with black markings |
| **Case** | Steel |
| **Lens** | Glass |
| **Ring** | Steel, chrome plated |
| **Stem** | Brass |
| **Thermowell** | Brass, 1/2" NPT (standard), separable |
| **Sensing Element** | Bi-metallic coil |
| **Pointer** | Aluminum, painted black |
| **Over Range Enclosure Rating** | ±25% of full scale value |
| **Reset** | Standard |
| **Ambient Temperature** | -22°F to 158°F (-30°C to 70°C) |
| **Process Temperature** | -22°F to 250°F (-30°C to 120°C) |
| **Accuracy** | ±2% of full scale |
| **Enclosure Rating** | IP50 |
| **Warning** | **WARNING:** This product can expose you to chemicals including lead, which is known to the State of California to cause cancer and birth defects or other reproductive harm. For more information go to www.P65Warnings.ca.gov. |

## Order Codes (products in bold are normally stock in North America)

| Range | Bottom | Back |
|---|---|---|
| 30°F to 250°F & 0°C to 121°C | **TBT165** | **TBT160** |
| 0°F to 120°F | - | **TBT161** |

Other ranges and connection sizes available upon request.

## Bottom Connection

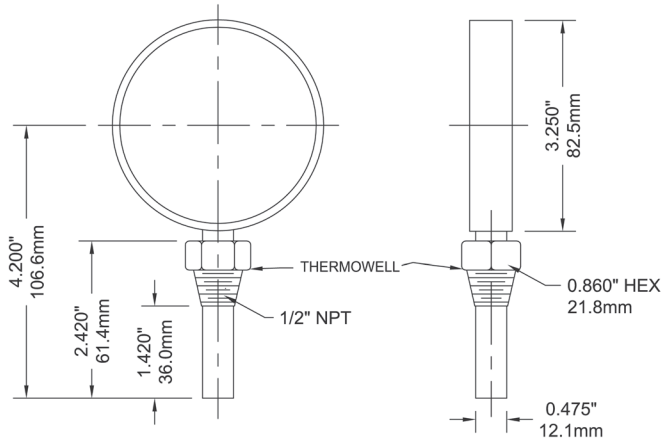

# TBT HVAC Bi-Metal Thermometer

## Engineering Codes

| TBT SERIES | | TBT - 35 - ### - BS - BR - N2 - N3 - N5 - N - G - R - M2 - B - CB - 2 - E - ALPL - SGTG - 6R - RSP - HT - Z### |
|---|---|---|
| DIAL SIZE | 3.5" (90mm) | 35 |
| PRESSURE SCALE & RANGE | SEE TEMPERATURE RANGES BELOW | ### |
| CASE MATERIAL | BLACK STEEL | BS |
| WETTED PARTS | BRASS/BRONZE | BR |
| PROCESS CONNECTION SIZE (MALE) | 1/2" | N2 |
| | 3/8" | N3 |
| | 3/4" | N5 |
| PROCESS CONNECTION TYPE | NPT | N |
| | BSPP (G), PARALLEL | G |
| | BSPT (R), TAPERED | R |
| | M20*1.5 | M2 |
| PROCESS CONNECTION LOCATION | BOTTOM, STEM | B |
| | CENTRE Back | CB |
| STEM LENGTH | 2.5" | 2 |
| ACCURACY % | 2.0 | E |
| OPTIONS, LIST IN ALPHA-NUMERIC ORDER | ACRYLIC LENS | AL |
| | POLYCARBONATE LENS | PL |
| | SAFETY GLASS, LAMINATED | SG |
| | SAFETY GLASS, TEMPERED | TG |
| | 316SS POLISHED RING | 6R |
| | RED SET POINTER | RSP |
| | HEAT TRANSFER COMPOUND | HT |
| | SPECIAL | Z### |

## Temperature Ranges

| F & C, DUAL SCALE | CODE |
|---|---|
| 30/250°F/C | T01 |
| 0/120°F/C | T02 |

# TCT Clamp-On Thermometer



## Description & Features:

- Provides an economical and accurate method to measure surface temperatures on a 1/2” (12.5mm) to 4” (100mm) pipe
- Clamp-on design with steel spring
- Dual scale (°F & °C)
- 3 ranges available
- Easy to install
- ASME B40.200 compliant
- 5 year warranty

## Applications:

- To measure surface temperature on pipe in the heating, ventilation, air conditioning, wastewater, industrial process markets

| Specifications | |
|---|---|
| **Dial** | 2.5” (63mm) aluminum with black markings |
| **Case** | Mild steel |
| **Lens** | Plexiglass |
| **Ring** | Steel, chrome plated |
| **Sensing Element** | Bi-metallic coil |
| **Pointer** | Aluminum, painted black |
| **Over-Range Enclosure Rating** | 25% of full scale value |
| **Ambient/Process Temperature** | -40°F to 390°F (-40°C to 200°C) |
| **Accuracy** | ±3% of full scale |
| **Enclosure Rating** | IP52 |

## Order Codes (products in bold are normally stock in North America)

| Range | Code |
|---|---|
| -40°F to 110°F & -40°C to 40°C | TCT166 |
| 30°F to 250°F & 0°C to 120°C | **TCT167** |
| 30°F to 390°F & 0°C to 200°C | **TCT168** |

Other ranges and connection sizes available upon request.

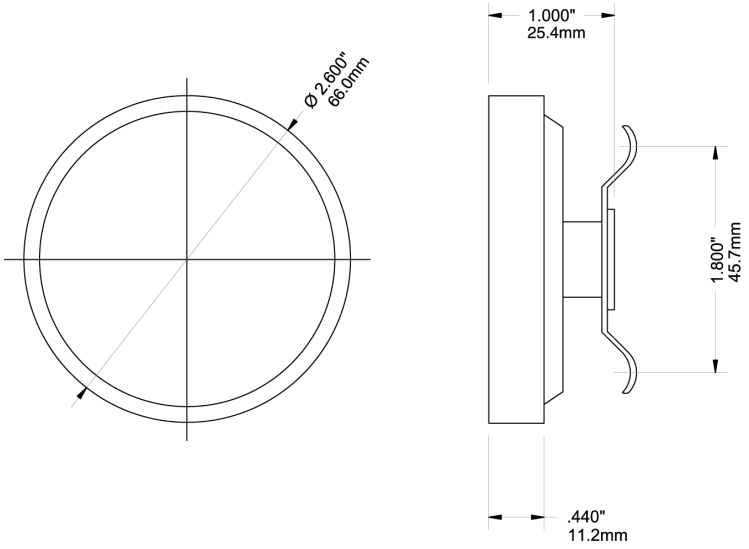

# THR HVAC Remote Reading Thermometer



## Description & Features:

- An economical thermometer for remote reading applications
- Stainless steel case
- Vapour actuated
- Panel mounted (Front Flange or U-Clamp)
- Dual scale (°F & °C)
- 9’ capillary length
- ASME B40.200 compliant
- 5 year warranty

## Applications:

- Freezers, walk-in refrigeration units, food storage cabinets, heating and ventilation
- Widely specified in the HVAC, commercial and mechanical industry segments

| Specifications | |
|---|---|
| **Dial** | Aluminum, painted white with black markings |
| **Case** | SS front flange, SS U-Clamp case |
| **Lens** | Plexiglass |
| **Bourdon Tube** | Phosphor bronze |
| **Movement** | Brass |
| **Pointer** | Aluminum, painted black |
| **Welding** | Silver alloy |
| **Capillary** | 9’ (3m) nickel plated brass |
| **Protective Spring** | SS |
| **Bulb** | Nickel plated brass |
| **Operating Temperature** | Recommended maximum 75% of full scale value |
| **Accuracy** | ±2.5% of full scale |
| **Enclosure Rating** | IP52 |
| **Warning** | ⚠ **WARNING:** This product can expose you to chemicals including lead, which is known to the State of California to cause cancer and birth defects or other reproductive harm. For more information go to www.P65Warnings.ca.gov. |

## Order Codes

| Dial Size | Panel Cut-out | Case Style | Range | Code |
|---|---|---|---|---|
| 2” (50mm) | 2.05” (52mm) | Front Flange | -40°F to 60°F & -40°C to 15°C | THR2214090R4 |
| 2” (50mm) | | | -20°F to 120°F & -30°C to 50°C | THR2214090R5 |
| 2” (50mm) | | U-Clamp | -40°F to 60°F & -40°C to 15°C | THR2514090R4 |
| 2” (50mm) | | | -20°F to 120°F & -30°C to 50°C | THR2514090R5 |
| 2.5” (63mm) | 2.55” (64mm) | Front Flange | -40°F to 60°F & -40°C to 15°C | THR3214090R4 |
| 2.5” (63mm) | | | -20°F to 120°F & -30°C to 50°C | THR3214090R5 |
| 2.5” (63mm) | | U-Clamp | -40°F to 60°F & -40°C to 15°C | THR3514090R4 |
| 2.5” (63mm) | | | -20°F to 120°F & -30°C to 50°C | THR3514090R5 |

Other ranges and connection sizes available upon request.

## 2” with U-Clamp

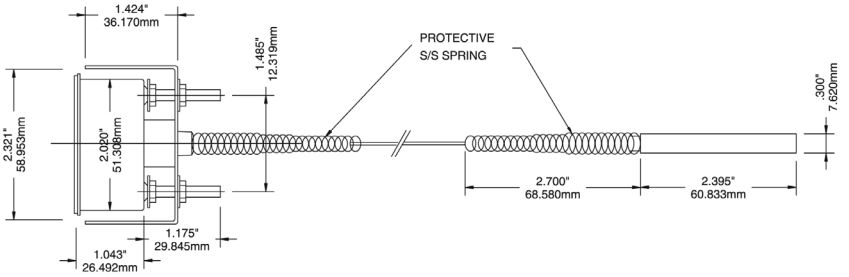


## 2” with Front Flange

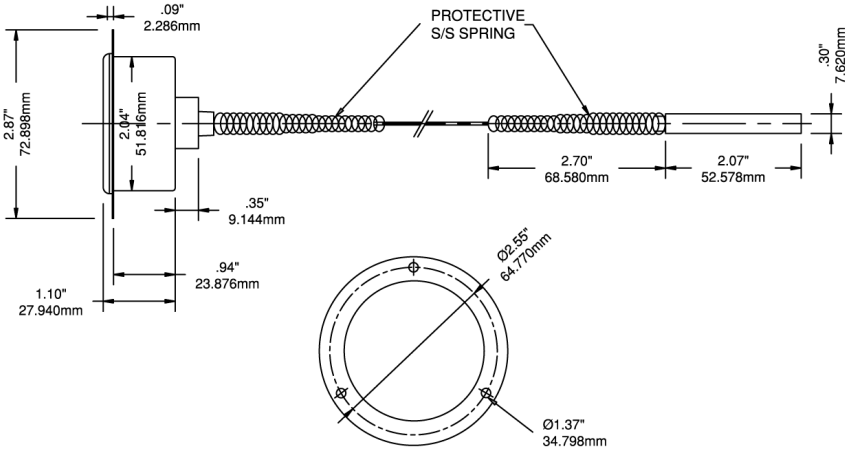


## 2.5” with U-Clamp

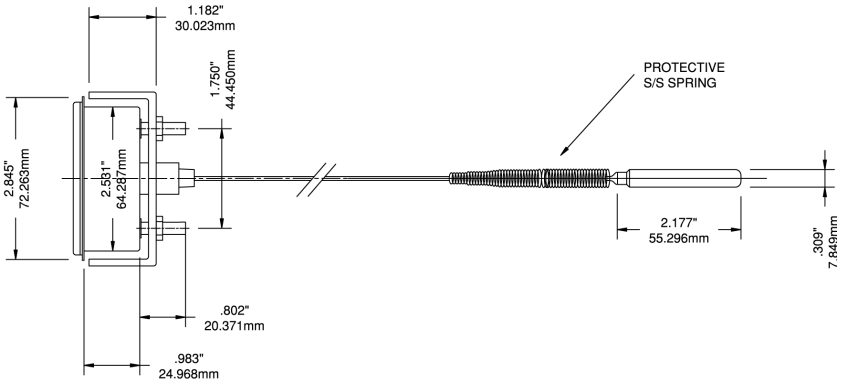


## 2.5” with Front Flange

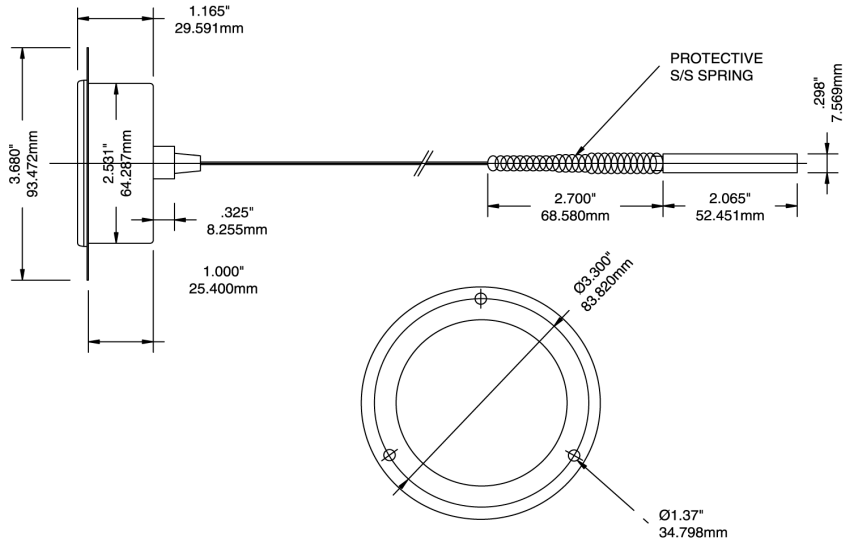

# THS Solar Digital Bi-Metal Thermometer




## Description & Features:

- A solar powered digital thermometer that provides a local temperature reading to 1/10 of a degree
- 304 stainless steel case, stem and socket
- Hermetically sealed thermometer case
- Minimum required light 35 Lux
- Ceramic resistance sensing element
- 1/2” adjustable angle connection
- 4” (100mm), 6” (150mm) and 9” (230mm) stem lengths
- °F or °C scales available
- ASME B40.200 compliant
- 5 year warranty

## Applications:

- Temperature sensing for heating, ventilation, air conditioning, waste water, industrial processes or compressors

| Specifications | |
|---|---|
| Dial | 3” (75mm) |
| Case | 304 SS |
| Lens | Glass (3mm thickness) |
| Ring | 304 SS, bezel, hermetically sealed |
| Display | LCD |
| Stem | 304 SS, 0.25” (6mm) diameter with lengths 2.5” (63mm) to 24” (600mm) |
| Connection | 1/2” NPT fully adjustable |
| Sensor | Ceramic resistance |
| Lux Rating | 35 Lux |
| Ambient Temperature | -4°F to 122°F (-20°C to 50°C) |
| Temperature Range | -58°F to 320°F (-50°C to 160°C) |
| Read Interval | Every 6 seconds |
| Accuracy | ±1% |
| Enclosure Rating | NEMA 4 / IP68 |

## Order Codes

| Stem Length | °F Scale | °C Scale |
|---|---|---|
| 2.5” (63mm) | THS32025F | THS32025C |
| 4” (100mm) | THS32040F | THS32040C |
| 6” (150mm) | THS32060F | THS32060C |
| 9” (230mm) | THS32090F | THS32090C |
| 12” (300mm) | THS32120F | THS32120C |
| 15” (370mm) | THS32150F | THS32150C |
| 18” (450mm) | THS32180F | THS32180C |
| 24” (600mm) | THS32240F | THS32240C |

Other ranges and connection sizes available upon request. 1/4” NPT and 3/8” NPT connection available. Longer stem lengths available up to 72”. 316 SS wetted parts and sharp tip are available.

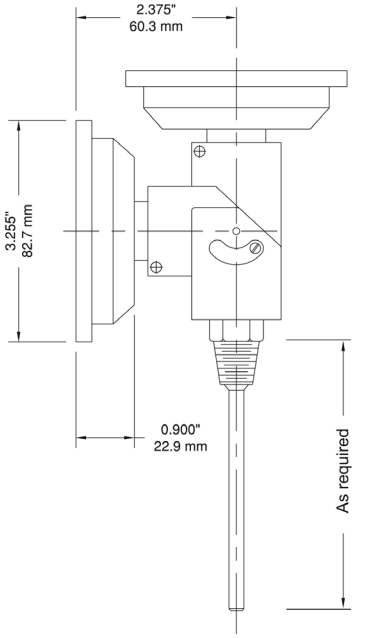


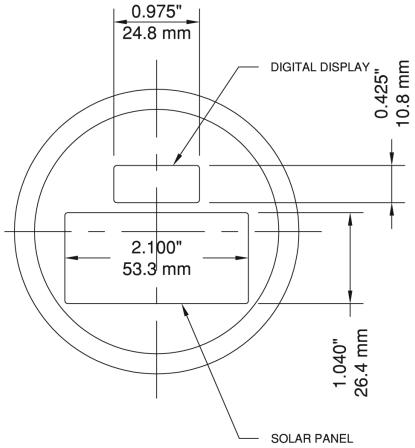

# TIM, TIM-LF — Industrial 9” Thermometer, Lead Free Industrial 9” Thermometer



## Description & Features:

- Widely specified in the industrial and commercial plumbing trade
- Includes a separable brass or lead free brass thermowell
- Can also be used with TIW/TIW-LF or TDF thermowells
- 3.5” (90mm) and 6” (150mm) stem
- Available in aluminum or Valox® (9”) case
- Organic filled tube (magnifying)
- Dual scale (°F & °C)
- Adjustable angle connection and 360° case rotation for easy installation
- Graphite filled bulb chamber for maximum heat conduction
- ASME B40.200 and ASTM E2251 compliant
- CAN/CGSB-14.4-M88 compliant
- ±1% accuracy
- 5 year warranty

## Applications:

- New construction, plumbing, water lines, boilers, heating, ventilation and air conditioning
- Lead free version for potable water systems

LEAD FREE

RoHS compliant

Note: RoHS applies only to 304 SS and 316 SS thermowells

| Specifications | |
|---|---|
| **Scale** | 9” (230mm) aluminum or Valox® case, impact resistant |
| **Lens** | Glass (polycarbonate available) |
| **Connection** | 3/4” NPT with thermowell<br>1 1/4” - 18 UNF swivel nut (no thermowell) |
| **Scales** | Aluminum, painted white with black markings |
| **Bulb Chamber** | Tapered cast aluminum with graphite fill |
| **Tube and Sensing Liquid** | Glass (magnifying), organic green fluid (other colours optional) |
| **Adjustment** | Fully adjustable |
| **Thermowell** | TIM: 3/4” Brass, separable socket (SS optional)<br>TIM-LF: 3/4” Lead free brass, separable socket |
| **Accuracy** | ±1% |
| **Enclosure Rating** | IP54 |
| **Warning** | **WARNING:** This product can expose you to chemicals including lead, which is known to the State of California to cause cancer and birth defects or other reproductive harm. For more information go to www.P65Warnings.ca.gov. |

Note: For an Industrial Thermowell, please refer to the Industrial Thermowell product page

## TIM Order Codes (products in bold are normally stock in North America)

| | Aluminum Case | | Valox® Case | |
|---|---|---|---|---|
| **Stem** | **3.5” (90mm)** | **6” (150mm)** | **3.5” (90mm)** | **6” (150mm)** |
| -40°F to 110°F & -40°C to 40°C | **TIM101A** | TIM101-6A | **TIM101** | TIM101-6 |
| 0°F to 120°F & -15°C to 50°C | **TIM102A** | **TIM102-6A** | **TIM102** | **TIM102-6** |
| 0°F to 160°F & -15°C to 70°C | **TIM103A** | TIM103-6A | **TIM103** | TIM103-6 |
| 30°F to 180°F & 0°C to 80°C | **TIM104A** | TIM104-6A | **TIM104** | TIM104-6 |
| 30°F to 240°F & 0°C to 115°C | **TIM100A** | **TIM100-6A** | TIM100 | TIM100-6 |
| 30°F to 300°F & 0°C to 150°C | **TIM105A** | **TIM105-6A** | **TIM105** | **TIM105-6** |

Other ranges and connection sizes available upon request. Duct flange available upon request. Union connection available upon request.

**Option suffix:**
B = Blue fill fluid
R = Red fill fluid

Valox® is a registered trademark of the General Electric Company

# TIM, TIM-LF

# Industrial 9” Thermometer, Lead Free Industrial 9” Thermometer

## TIM-LF Order Codes (products in bold are normally stock in North America)

| | Aluminum Case | | Valox® Case | |
|---|---|---|---|---|
| **Stem** | **3.5” (90mm)** | **6” (150mm)** | **3.5” (90mm)** | **6” (150mm)** |
| -40°F to 110°F & -40°C to 40°C | TIM101ALF | TIM101-6ALF | TIM101LF | TIM101-6LF |
| 0°F to 120°F & -15°C to 50°C | TIM102ALF | TIM102-6ALF | **TIM102LF** | TIM102-6LF |
| 0°F to 160°F & -15°C to 70°C | TIM103ALF | TIM103-6ALF | TIM103LF | TIM103-6LF |
| 30°F to 180°F & 0°C to 80°C | **TIM104ALF** | TIM104-6ALF | **TIM104LF** | TIM104-6LF |
| 30°F to 240°F & 0°C to 115°C | TIM100ALF | TIM100-6ALF | TIM100LF | TIM100-6LF |
| 30°F to 300°F & 0°C to 150°C | **TIM105ALF** | TIM105-6ALF | TIM105LF | TIM105-6LF |

Other ranges available upon request.

**Option suffix:**

B = Blue fill fluid

R = Red fill fluid

Valox® is a registered trademark of the General Electric Company

## TIW-LF Thermowell Order Codes (products in bold are normally stock in North America)

| Stem Length | Overall Length | Material | Insertion Length | 3/4” NPT Connection |
|---|---|---|---|---|
| **3.5” Without Lagging** | 4.25" (108mm) | Lead Free Brass | 2.5” (63mm) | **TIW01LF** |
| **6” Without Lagging** | 6.75" (172mm) | Lead Free Brass | 5” (127mm) | **TIW04LF** |

### 3.5” Stem

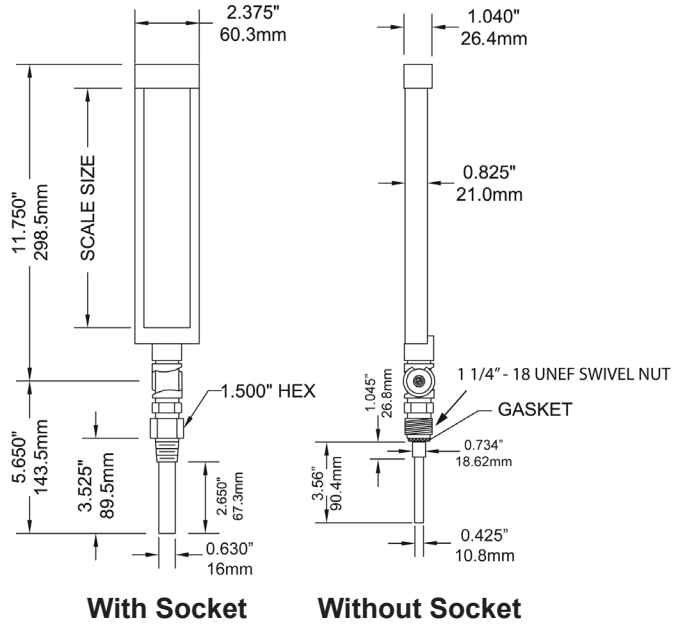


### 6” Stem

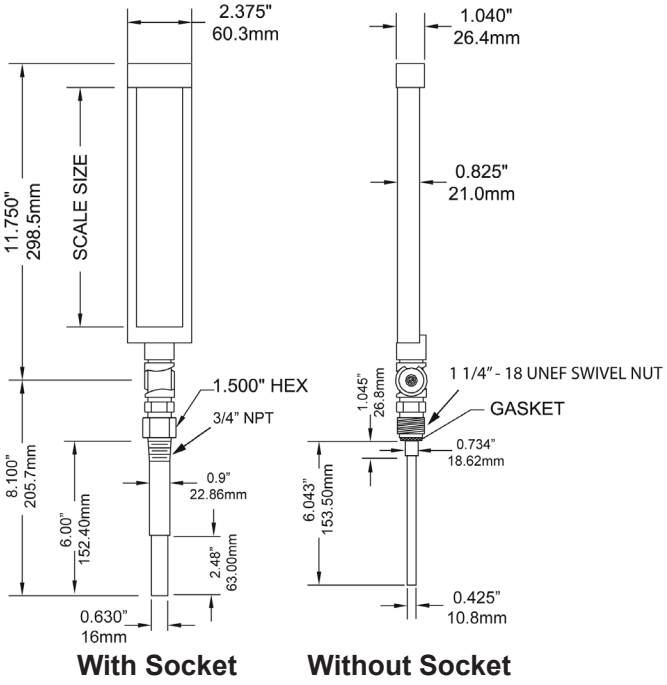

# TMT Surface Magnet Thermometer




## Description & Features:

- Provides an economical and accurate method for measuring the temperature on a flat metallic surface
- 2” (50mm) dial
- Dual scale (°F & °C)
- 3 ranges available
- Easy to install
- ASME B40.200 compliant
- 5 year warranty

## Applications:

- Ductwork or motor housings

| Specifications | |
|---|---|
| **Dial** | 2” (50mm) aluminum with black and red markings |
| **Case** | Steel, painted black |
| **Lens** | Glass |
| **Sensing Element** | Bi-metallic coil |
| **Pointer** | Aluminum, painted black |
| **Ambient/Process Temperature** | Recommended maximum 75% of full scale value |
| **Accuracy** | ±2% of full scale |
| **Enclosure Rating** | IP52 |

## Order Codes (products in bold are normally stock in North America)

| Range | Code |
|---|---|
| 0°F to 250°F & -20°C to 120°C | **TMT7412** |
| 0°F to 500°F & -15°C to 260°C | **TMT7410** |
| 50°F to 750°F & 10°C to 400°C | TMT7409 |

Other ranges and connection sizes available upon request.

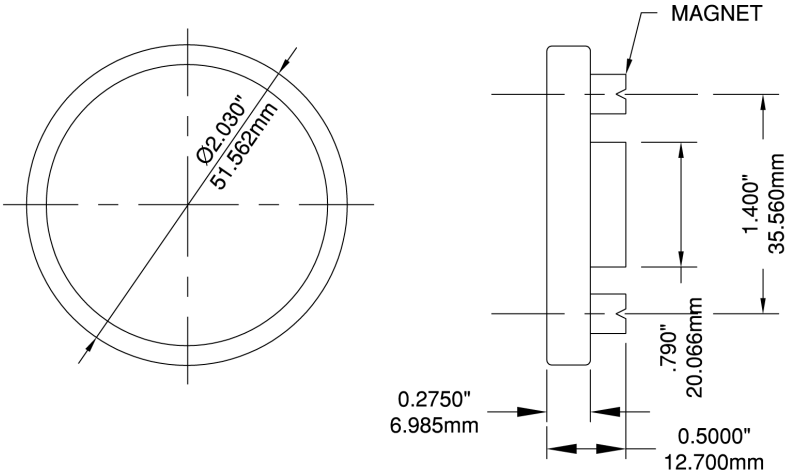

# TNR Food & Beverage Bi-Metal Thermometer




RoHS compliant

## Description & Features:

- A general purpose, tamper-proof, 304 stainless steel thermometer
- Hermetically sealed case
- Bi-metallic sensing element for reliable readings
- Back connected
- Stem length from 2.5” (63mm) and up
- ±1% accuracy
- Anti-parallax dial that reduces operator reading errors
- Lexan® lens
- Can be used with TSN thermowells
- 5 year warranty

## Applications:

- Food processing and beverage industry

| Specifications | |
|---|---|
| **Dial** | 3” (75mm) dish shaped dial, aluminum with black markings |
| **Case/Ring** | AISI 304 SS |
| **Lens** | Lexan®, hermetically sealed |
| **Stem** | AISI 304 SS |
| **Connection** | 1/2” NPT, centre back |
| **Sensing Element** | Bi-metallic coil |
| **Pointer** | Aluminum, painted black |
| **Welding** | TIG |
| **Maximum Operating Pressure** | 125 psi (861 kPa) |
| **Operating Temperature** | Recommended maximum 75% of full scale value |
| **Ambient/Process Temperature** | Maximum 248°F (120°C) |
| **Accuracy** | ±1% |
| **Enclosure Rating** | IP68 |

Note: The use of a thermowell is recommended to protect the thermometer in corrosive or pressure applications, as well as to maintain a closed system during its removal from the process

## Order Codes (products in bold are normally stock in North America)

| Dial and Stem | Code |
|---|---|
| 3” (75 mm) dial with 2.5” (63mm) stem | **TNR33025** |
| 3” (75 mm) dial with 4” (100mm) stem | TNR33040 |
| 3” (75 mm) dial with 6” (150mm) stem | TNR33060 |
| 3” (75 mm) dial with 9” (225mm) stem | TNR33090 |

| Dual Scale Range | Code Suffix |
|---|---|
| -40°F to 120°F & -40°C to 50°C | **B2** |
| -40°F to 160°F & -40°C to 70°C | B4 |
| 0°F to 200°F & -20°C to 90°C | B6 |
| 0°F to 250°F & -20°C to 120°C | **B8** |
| 50°F to 300°F & 10°C to 150°C | B9 |
| 50°F to 400°F & 10°C to 200°C | B10 |
| 50°F to 500°F & 10°C to 260°C | **B11** |
| 150°F to 750°F & 100°C to 400°C | B12 |
| 200°F to 1,000°F & 100°C to 540°C | B13 |

Other ranges and connection sizes available upon request.

*(i.e. 3” TNR with 4” (100mm) stem, -40°F to 160°F & -40°C to 70°C = **TNR33040B4**)*

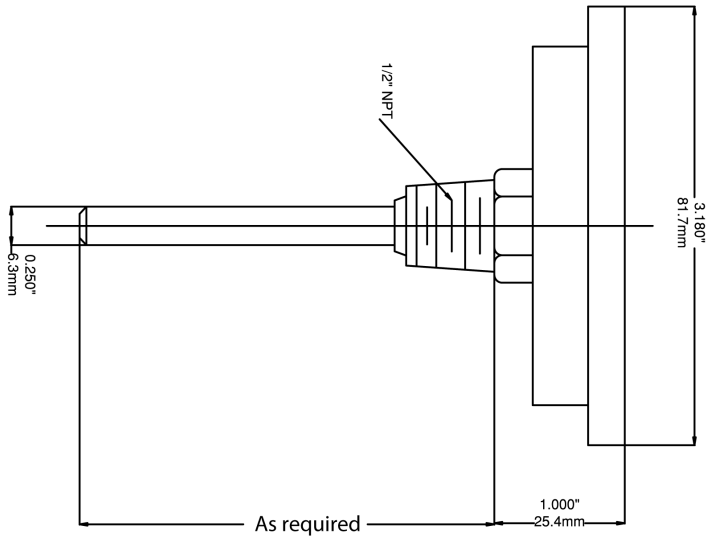


Lexan® is a registered trademark of the General Electric Company

# TRR Gas or Vapour Remote Reading Thermometer




Note: RoHS applies only with SS bulb, SS capillary and SS thermowell

## Description & Features:

- Versatile, heavy duty gas or vapour thermometer for remote reading
- Many varieties are available from stock; special requests are built to order
- Brass or stainless steel capillary and bulbs
- Plain, sliding union or thermowell connection
- Capillary lengths over 5' available
- 1/2" bulb diameter
- Panel or direct mount
- Gas: ±1% accuracy; Vapour: ±2% accuracy
- ASME B40.200 compliant
- 5 year warranty

## Applications:

- For remote temperature sensing of tanks, reservoirs and process lines
- Appropriate for industrial and commercial installations

| Specifications | |
|---|---|
| **Dial** | 2.5" (63mm), 3.5" (90mm), 4" (100mm), 4.5" (115mm), 6" (150mm), 8.5" (215mm) |
| **Case/Ring** | 2.5" (63mm): 316 SS<br>3.5" (90mm), 4" (100mm): Steel, painted black<br>Others: Aluminum, painted black |
| **Lens** | 2.5" (63mm) to 6" (150mm): Glass<br>Others: Polycarbonate |
| **Connection** | Plain,<br>Brass or 316 SS sliding union,<br>Brass or 316 SS thermowell |
| **Sensing Fill** | Gas or vapour |
| **Movement** | Gas: 304 SS<br>Vapour: Brass |
| **Pointer** | Aluminum, painted black |
| **Accuracy** | Gas: ±1% of full scale value<br>Vapour: ±2% of full scale value |
| **Bulb** | 6" (150mm), 1/2" diameter standard<br>Custom sizes available |
| **Warning (brass connection only)** | ⚠ **WARNING:** This product can expose you to chemicals including lead, which is known to the State of California to cause cancer and birth defects or other reproductive harm. For more information go to www.P65Warnings.ca.gov. |

**Selection Notes**

Gas-filled Systems

- For industrial applications requiring accurate and uniform response over the entire range. Scale is linear
- The capillary should be located in an area that has an ambient temperature of approximately 74°F (23°C). If the temperature around the capillary is significantly higher than 74°F (23°C), the thermometer will show a reading that is higher than actual process temperature. If the capillary ambient temperature is significantly lower than 74°F (23°C), the reading will be lower than the actual process temperature

Vapour-filled Systems

- Have non-linear scales and provide economical but reliable service for most industrial applications
- To ensure accurate readings, the operating temperature should fall in the 2/3 of the scale
- Thermometer may show a temperature offset to actual temperature value when the bulb and thermometer are installed at different elevations. To avoid this, install the bulb and thermometer at the same elevation wherever possible. Offset errors only occur when the thermometer's ambient temperature is higher than the bulb temperature

Capillary Protection

- Is recommended to protect the capillary from physical damage
- Copper braided armour is used in conjunction with brass bulb
- Stainless steel armour shall be used in conjunction with 316 SS bulb

**Note:** Winters recommends using a stainless steel bulb and capillary for all process temperatures above 500°F (260°C)

## Gas-filled Systems - Order Codes (products in bold are normally in stock)

| Dial Size | 2.5" (63mm) | | | | 3.5" (90mm) | |
|---|---|---|---|---|---|---|
| Bulb and Capillary Material | SS | | | | | |
| Capillary Length and Connection | 5' Bottom | 5' Back | 10' Bottom | 10' Back | 5' Back | 10' Back |
| 30°F to 240°F&C | - | - | - | TRR12253100G18 | TRR12353050G18 | TRR12353100G18 |
| 40°F to 220°F&C | TRR11253050G19 | TRR12253050G19 | TRR11253100G19 | TRR12253100G19 | TRR12353050G19 | TRR12353100G19 |
| 80°F to 300°F&C | TRR11253050G20 | TRR12253050G20 | TRR11253100G20 | TRR12253100G20 | TRR12353050G20 | TRR12353100G20 |
| 100°F to 400°F&C | TRR11253050G21 | TRR12253050G21 | TRR11253100G21 | TRR12253100G21 | TRR12353050G21 | TRR12353100G21 |
| 100°F to 500°F&C | TRR11253050G22 | - | TRR11253100G22 | - | - | - |

| Dial Size | 4" (100mm) | | | |
|---|---|---|---|---|
| Bulb and Capillary Material | SS | | | |
| Capillary Length and Connection | 5' Bottom | 5' Back | 10' Bottom | 10' Back |
| 30°F to 240°F&C | - | TRR12403050G18 | - | TRR12403100G18 |
| 40°F to 220°F&C | TRR11403050G19 | TRR12403050G19 | TRR11403100G19 | TRR12403100G19 |
| 80°F to 300°F&C | TRR11403050G20 | TRR12403050G20 | TRR11403100G20 | TRR12403100G20 |
| 100°F to 400°F&C | TRR11403050G21 | TRR12403050G21 | TRR11403100G21 | TRR12403100G21 |
| 100°F to 500°F&C | TRR11403050G22 | - | TRR11403100G22 | - |

| Dial Size | 4.5" (115mm) | | | |
|---|---|---|---|---|
| Bulb and Capillary Material | SS | | | |
| Capillary Length and Connection | 5' Bottom | 5' Back | 10' Bottom | 10' Back |
| 30°F to 240°F&C | - | TRR12453050G18 | - | TRR12453100G18 |
| 40°F to 220°F&C | TRR11453050G19 | TRR12453050G19 | TRR11453100G19 | TRR12453100G19 |
| 80°F to 300°F&C | TRR11453050G20 | TRR12453050G20 | TRR11453100G20 | TRR12453100G20 |
| 100°F to 400°F&C | TRR11453050G21 | TRR12453050G21 | TRR11453100G21 | TRR12453100G21 |
| 100°F to 500°F&C | TRR11453050G22 | - | TRR11453100G22 | - |

## Gas-filled Systems - Order Codes (products in bold are normally in stock)

| Dial Size | 6" (150mm) | | | |
|---|---|---|---|---|
| Bulb and Capillary Material | SS | | | |
| Capillary Length and Connection | 5' Bottom | 5' Back | 10' Bottom | 10' Back |
| 30°F to 240°F&C | - | TRR12603050G18 | - | TRR12603100G18 |
| 40°F to 220°F&C | TRR11603050G19 | TRR12603050G19 | TRR11603100G19 | TRR12603100G19 |
| 80°F to 300°F&C | TRR11603050G20 | TRR12603050G20 | TRR11603100G20 | TRR12603100G20 |
| 100°F to 400°F&C | TRR11603050G21 | TRR12603050G21 | TRR11603100G21 | TRR12603100G21 |
| 100°F to 500°F&C | TRR11603050G22 | - | TRR11603100G22 | - |

## Vapour-filled Systems - Order Codes (products in bold are normally in stock)

| Dial Size | 2.5" (63mm) | | | | 3.5" (90mm) | |
|---|---|---|---|---|---|---|
| Bulb and Capillary Material | Brass and Copper | | | | | |
| Capillary Length and Connection | 5' Bottom | 5' Back | 10' Bottom | 10' Back | 5' Back | 10' Back |
| -40°F to 110°F&C | TRR31251050V9 | - | - | - | - | - |
| 0°F to 180°F&C | TRR31251050V11 | TRR32251050V11 | TRR31251100V11 | - | TRR32351050V11 | TRR32351100V11 |
| 20°F to 220°F&C | - | TRR32251050V12 | TRR31251100V12 | - | TRR32351050V12 | - |
| 50°F to 250°F&C | TRR31251050V13 | - | TRR31251100V13 | TRR32251100V13 | - | TRR32351100V13 |
| 100°F to 350°F&C | TRR31251050V15 | TRR32251050V15 | TRR31251100V15 | TRR32251100V15 | - | TRR32351100V15 |

| Dial Size | 4" (100mm) | | | |
|---|---|---|---|---|
| Bulb and Capillary Material | Brass and Copper | | | |
| Capillary Length and Connection | 5' Bottom | 5' Back | 10' Bottom | 10' Back |
| 0°F to 180°F&C | TRR31401050V11 | - | TRR31401100V11 | TRR32401100V11 |
| 20°F to 220°F&C | TRR31401050V12 | TRR32401050V12 | TRR31401100V12 | TRR32401100V12 |
| 50°F to 250°F&C | TRR31401050V13 | - | - | TRR32401100V13 |
| 100°F to 350°F&C | TRR31401050V15 | TRR32401050V15 | TRR31401100V15 | TRR32401100V15 |

| Dial Size | 4.5" (115mm) | | | |
|---|---|---|---|---|
| Bulb and Capillary Material | Brass and Copper | | | |
| Capillary Length and Connection | 5' Bottom | 5' Back | 10' Bottom | 10' Back |
| 0°F to 180°F&C | TRR31451050V11 | TRR32451050V11 | TRR31451100V11 | TRR32451100V11 |
| 20°F to 220°F&C | TRR31451050V12 | TRR32451050V12 | TRR31451100V12 | TRR32451100V12 |
| 50°F to 250°F&C | TRR31451050V13 | TRR32451050V13 | TRR31451100V13 | TRR32451100V13 |
| 100°F to 350°F&C | TRR31451050V15 | TRR32451050V15 | TRR31451100V15 | TRR32451100V15 |

| Dial Size | 6" (150mm) | | | |
|---|---|---|---|---|
| Bulb and Capillary Material | Brass and Copper | | | |
| Capillary Length and Connection | 5' Bottom | 5' Back | 10' Bottom | 10' Back |
| 0°F to 180°F&C | TRR31601050V11 | TRR32601050V11 | TRR31601100V11 | TRR32601100V11 |
| 20°F to 220°F&C | TRR31601050V12 | - | TRR31601100V12 | TRR32601100V12 |
| 50°F to 250°F&C | TRR31601050V13 | TRR32601050V13 | - | TRR32601100V13 |
| 100°F to 350°F&C | TRR31601050V15 | TRR32601050V15 | - | TRR32601100V15 |

# TRR Gas or Vapour Remote Reading Thermometer

## Built-to-Order Codes

Specify the code for each section and the range:
e.g. TRR3 - 2 - 35 - 1 - 05 - 1 - 50/250°F
(Section I - II - III - IV - V - VI - range)

TRR's are made to order in 4-6 weeks. For stocked TRR's see the previous page

| Section | Code | Description Type | Section | Code | Description Bulb and Capillary | | | |
|---|---|---|---|---|---|---|---|---|
| | | | | | Bulb Dimensions | Bulb Material | Capillary Material | Capillary Protection |
| I | TRR1 | Gas Remote Reading | IV | 1 | 6" (150mm) OAL, 1/2" OD | Brass | Copper | Copper Dbl Braided |
| | TRR2 | Gas Direct Reading | | 2 | 6" (150mm) OAL, 1/2" OD | 316 SS | 316 SS | None |
| | TRR3 | Vapour Remote Reading | | 3 | 6" (150mm) OAL, 1/2" OD | 316 SS | 316 SS | SS Armour |
| | TRR4 | Vapour Direct Reading | V | Capillary Length (ft) | | | | |
| II | Case Type, Connection | | | 05 | 05 | | | |
| | 1 | Bottom connection, back flange | | 10 | 10 | | | |
| | 2 | Back connection, front flange | | 30 | 30 | | | |
| | 3 | Back connection, back flange | | XX | XX | | | |
| | 4 | Vari-angle connection, (Direct reading only) | VI | Connection | | | | |
| III | Dial Size | | | 0 | None | | | |
| | 25 | 2.5" (63mm) | | 1 | 1/2" NPT brass sliding union | | | |
| | 35 | 3.5" (90mm) Back connection only | | 2 | 1/2" NPT SS sliding union | | | |
| | | | | 3 | 3/4" NPT brass sliding union | | | |
| | 40 | 4" (100mm) | | 4 | 3/4" NPT SS sliding union | | | |
| | 45 | 4.5" (115mm) | | 5 | 1/2" NPT brass thermowell | | | |
| | 60 | 6" (150mm) | | 6 | 1/2" NPT SS thermowell | | | |
| | 85 | 8.5" (215mm) | | 7 | 3/4" NPT brass thermowell | | | |
| | | | | 8 | 3/4" NPT SS thermowell | | | |
| | | | | Z | Custom connection | | | |

| Ranges | °F only | °F & °C | °C only |
|---|---|---|---|
| Gas Ranges | -40°F to 110°F | -40°F to 110°F & -40°C to 40°C | -40°C to 40°C |
| | -20°F to 120°F | -20°F to 120°F & -28°C to 48°C | -28°C to 48°C |
| | 30°F to 150°F | 30°F to 150°F & 0°C to 65°C | 0°C to 65°C |
| | 0°F to 180°F | 0°F to 180°F & -20°C to 80°C | -20°C to 80°C |
| | 30°F to 240°F | 30°F to 240°F & 0°C to 115°C | 0°C to 115°C |
| | 40°F to 220°F | 40°F to 220°F & 5°C to 105°C | 5°C to 105°C |
| | 80°F to 300°F | 80°F to 300°F & 30°C to 150°C | 30°C to 150°C |
| | 100°F to 400°F* | 100°F to 400°F* & 40°C to 200°C* | 40°C to 200°C |
| | 100°F to 500°F* | 100°F to 500°F* & 40°C to 260°C* | 40°C to 260°C |
| | 0°F to 600°F* | 0°F to 600°F* & -20°C to 320°C* | -20°C to 320°C |
| | 200°F to 1,000°F* | 200°F to 1,000°F* & 90°C to 540°C* | 90°C to 540°C |
| Vapour Ranges | -40°F to 110°F | -40°F to 110°F & -40°C to 40°C | -40°C to 40°C |
| | 0°F to 100°F | 0°F to 100°F & -20°C to 38°C | -20°C to 38°C |
| | 0°F to 180°F | 0°F to 180°F & -20°C to 80°C | -20°C to 80°C |
| | 20°F to 220°F | 20°F to 220°F & 0°C to 100°C | 0°C to 100°C |
| | 50°F to 250°F | 50°F to 250°F & 10°C to 120°C | 10°C to 120°C |
| | 100°F to 350°F | 100°F to 350°F & 40°C to 175°C | 40°C to 175°C |

*Ranges require stainless steel capillary and bulb

**Please contact us for:**
Duct flanges, sliding union, various bulb dimensions, averaging bulb (gas only), other ranges, stainless steel 4" (100mm) and 6" (150mm) cases and capillary available on gas remote/direct reading models

Note: The use of a thermowell is recommended to protect the thermometer in corrosive or pressure applications, as well as to maintain a closed system during its removal from the process.

### 4” Back Connection, Front Flange, Plain Bulb

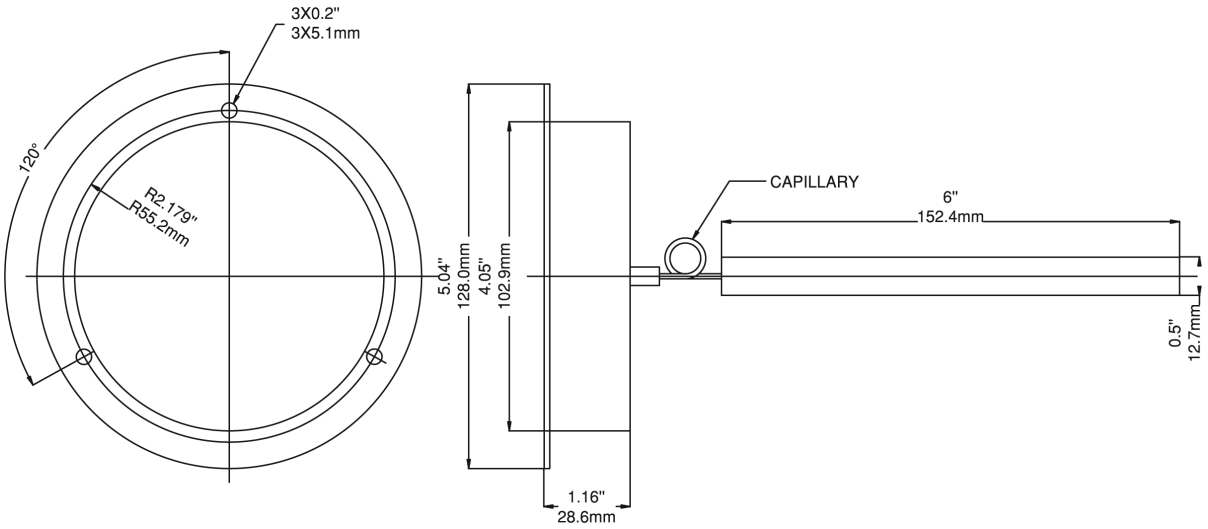


### 4” Back Connection, Front Flange, Sliding Union

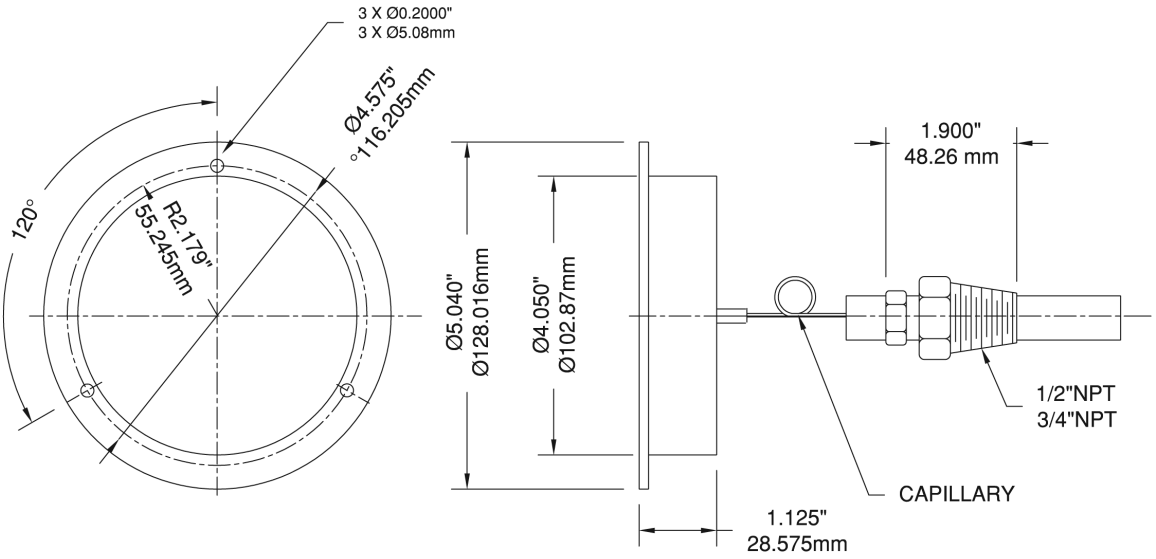

## 4” Bottom Connection, Back Flange, Sliding Union

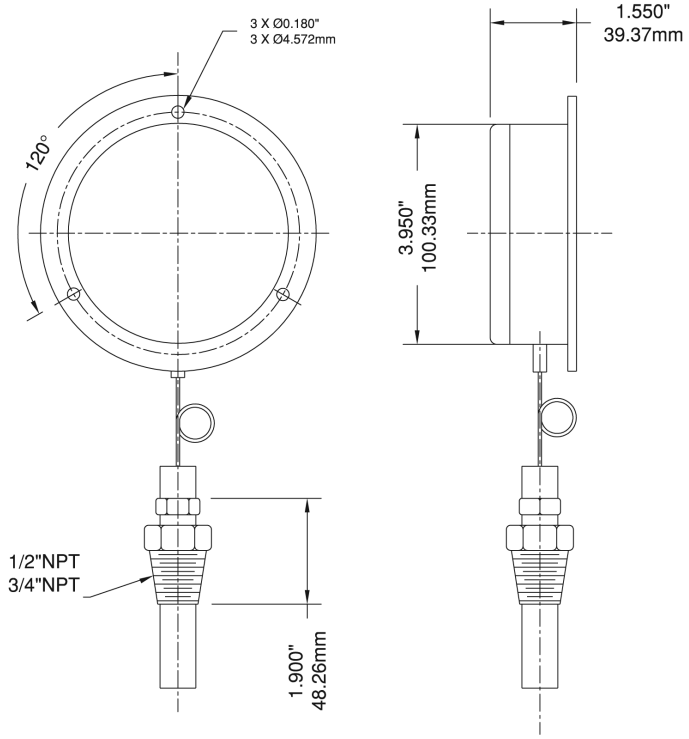


## 4.5” Bottom Connection, Back Flange, Plain Bulb

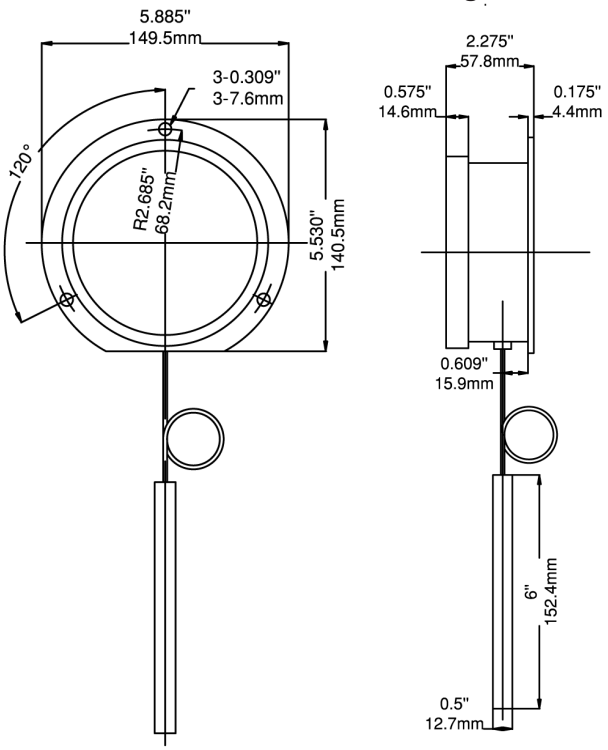


## 6” Bottom Connection, Back Flange, Sliding Union

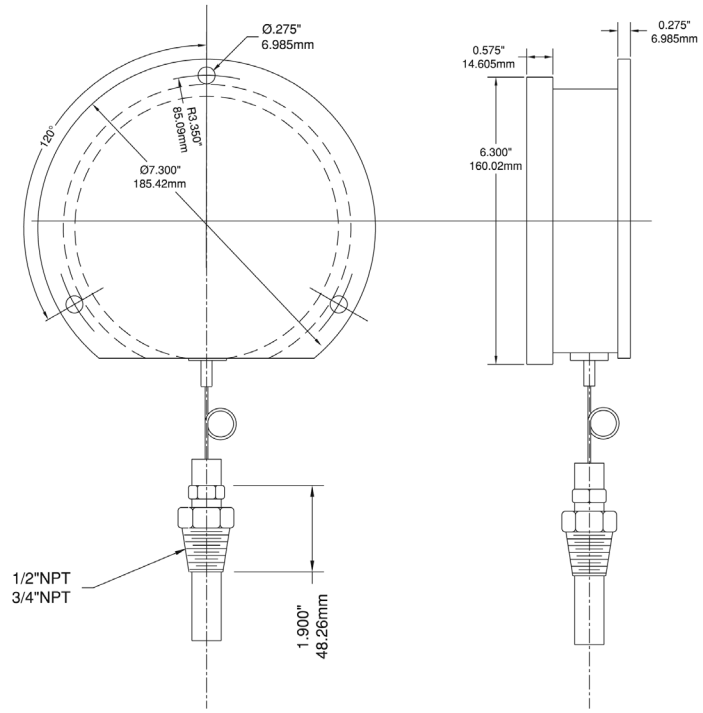


## 6” Bottom Connection, Back Flange, Sliding Union

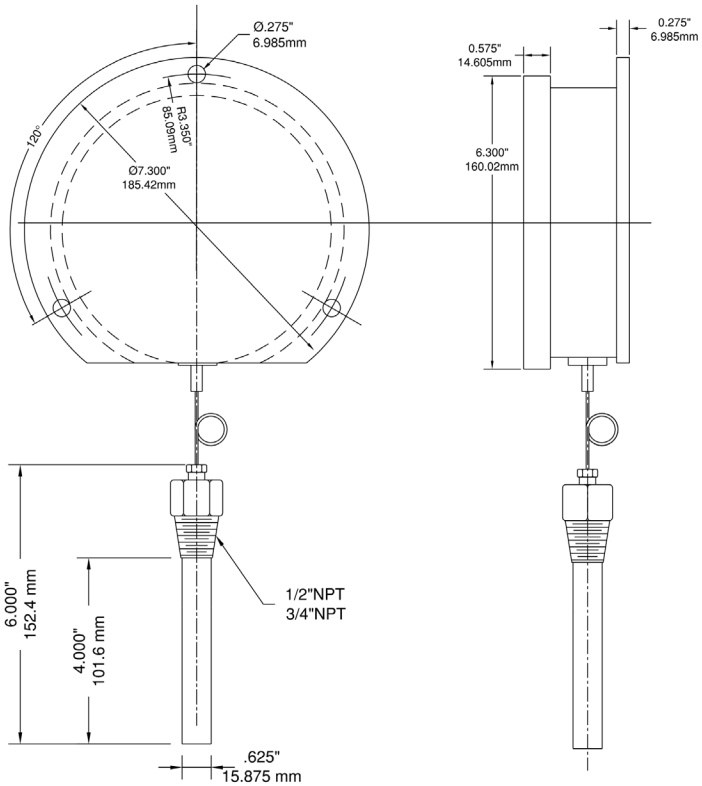

# TSD Industrial Solar Digital Thermometer



Note: RoHS applies only with SS TIW thermowell

## Description & Features:

- A versatile thermometer that provides a solar powered digital read out commonly used in the industrial and commercial plumbing trade
- Low light compatible (16 Lux minimum)
- Includes a separable thermowell
- Durable ABS case
- Switchable temperature scale (°F or °C)
- Adjustable angle connection for easy installation
- ±1% accuracy
- ASME B40.200 compliant
- 5 year warranty

## Applications:

- New construction, plumbing, water lines, boilers, heating, ventilation and air conditioning

| Specifications | |
|---|---|
| **Display** | 2.55" x 4.67" (63.7mm x 116.7mm) solar powered display |
| **Housing** | High impact ABS plastic housing with aluminum movable parts |
| **Lux Rating** | 16 Lux |
| **Sensing Element** | Liquid |
| **Stem Length** | 3.5" (90mm), 6" (150mm) |
| **Connection / Thermowell** | 3/4" NPT, with brass thermowell standard, (SS optional)<br>1-1/4" UNF swivel nut (without thermowell) |
| **Temperature Range** | -50°F to 320°F (-45°C to 160°C) |
| **Read Interval** | Every 6 seconds |
| **Ambient Temperature** | 14°F to 150°F (-10°C to 65°C) |
| **Process Temperature** | -50°F to 320°F (-45°C to 160°C) |
| **Accuracy** | ±1% |
| **Enclosure Rating** | NEMA 5 / IP54 |
| **Warning (brass thermowell only)** | ⚠ **WARNING:** This product can expose you to chemicals including lead, which is known to the State of California to cause cancer and birth defects or other reproductive harm. For more information go to www.P65Warnings.ca.gov. |

## Order Codes (products in bold are normally stock in North America)

| Stem/Ranges | Code (Includes Thermowell) |
|---|---|
| 3.5" (90mm) Stem (-50°F to 320°F or -45°C to 160°C) | **TSD9ITSD** |
| 6" (150mm) Stem (-50°F to 320°F or -45°C to 160°C) | **TSD9ITSD6** |

Other ranges and connection sizes available upon request. Duct flange and union connection available upon request. 6" (150mm) stem available. For an Industrial Thermowell, please refer to the Industrial Thermowell product page.

# TSD Industrial Solar Digital Thermometer

### 3.5” Stem with Thermowell

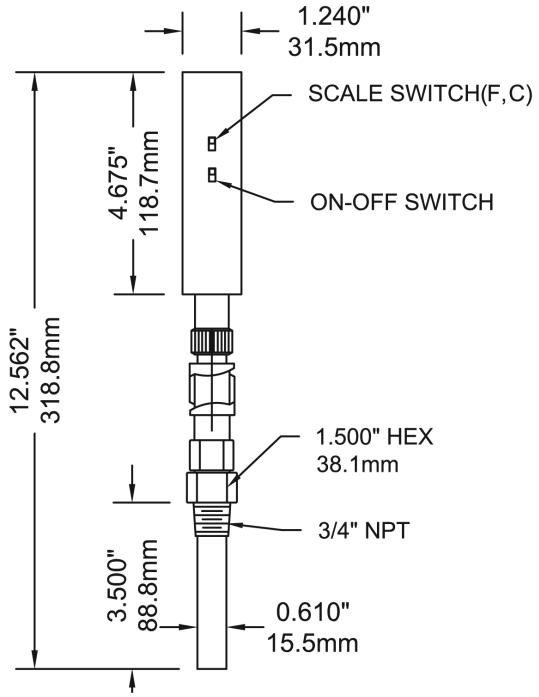


### 3.5” Stem without Thermowell

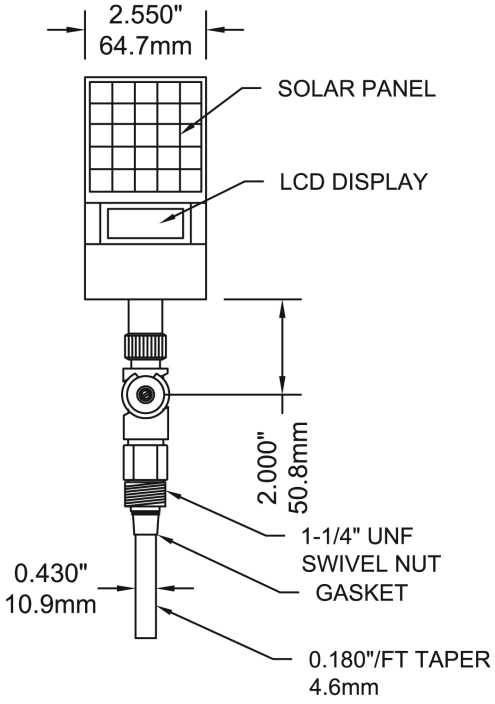


### 6” Stem with Thermowell

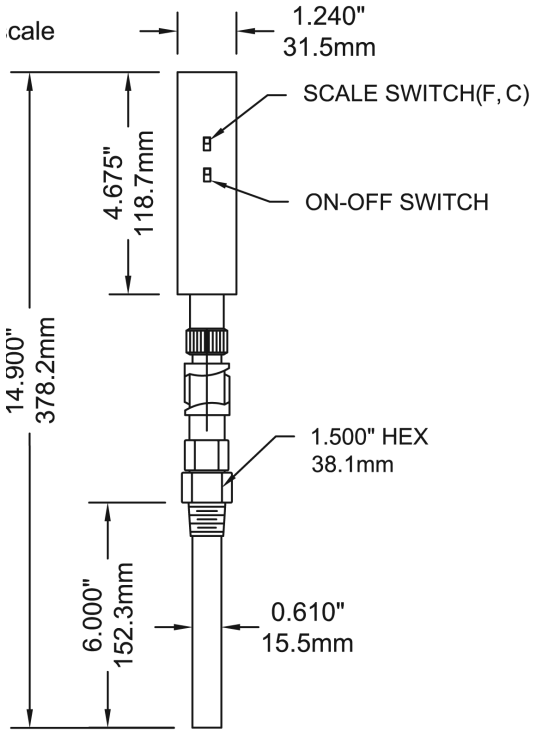


### 6” Stem without Thermowell

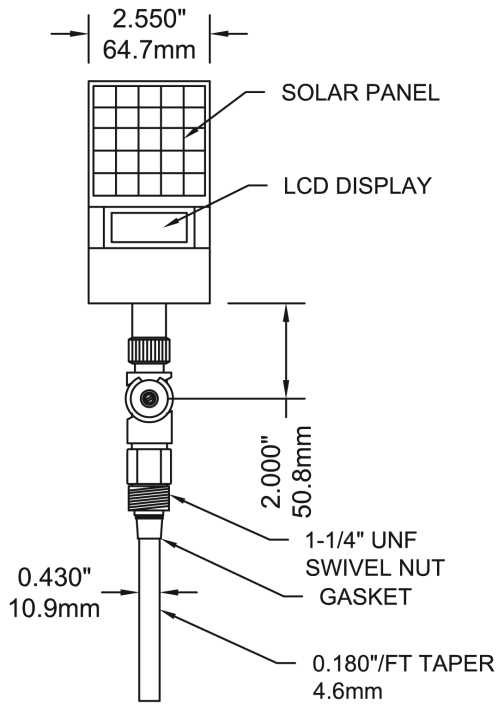

# TSW, TSW-LF Hot Water Thermometer, Lead Free Hot Water Thermometer



Dial Type



Scale Type

## Description & Features:

- An economical and accurate way to measure air or water temperatures
- Separable brass or lead free brass thermowell
- Bi-metallic element (dial type only)
- Dual scale (°F & °C)
- Dial type or vertical scale type
- Easy to install
- 1/2” NPT process connection
- ASME B40.200 compliant
- 5 year warranty

## Applications:

- Hot water lines, boilers and hydronic heating
- Lead free version for potable water systems

| Dial Type Specifications | |
|---|---|
| **Dial** | 2” (50mm), 2.5” (63mm) aluminum, painted white with black and red markings |
| **Case** | Aluminum |
| **Lens** | Glass |
| **Ring** | Steel, chrome plated |
| **Thermowell** | TSW: Brass (HPB59-1), 1/2” NPT standard, separable<br>TSW-LF: Lead free brass, 1/2” NPT standard, separable |
| **Stem** | Brass |
| **Sensing Element** | Bi-metallic element |
| **Pointer** | Aluminum, painted black |
| **Recalibrator** | Standard |
| **Accuracy** | ±1% |
| **Warning** | ⚠ **WARNING:** This product can expose you to chemicals including lead, which is known to the State of California to cause cancer and birth defects or other reproductive harm. For more information go to www.P65Warnings.ca.gov. |

| Scale Type Specifications | |
|---|---|
| **Scale/Case** | 8” (200mm) scale with steel case, painted white with black markings |
| **Tube** | #N-16 glass |
| **Sensing Liquid** | Organic fluid (red) |
| **Thermowell** | TSW: Brass (HPB59-1), 1/2” NPT standard, separable<br>TSW-LF: Lead free brass, 1/2” NPT standard, separable |
| **Accuracy** | ±1% |
| **Warning** | ⚠ **WARNING:** This product can expose you to chemicals including lead, which is known to the State of California to cause cancer and birth defects or other reproductive harm. For more information go to www.P65Warnings.ca.gov. |

## TSW Dial Order Codes (products in bold are normally stock in North America)

| Dial | Range | Connection | Code |
|---|---|---|---|
| 2” (50mm) | 30°F to 250°F & 0°C to 120°C | 1/2” NPT centre back | **TSW174-2** |
| 2.5” (63mm) | 30°F to 250°F & 0°C to 120°C | 1/2” NPT centre back | **TSW174** |
| | | 3/4” Sweatwell | **TSW174-SW** |

Other ranges, stem lengths, dial and connection sizes available upon request.

## TSW Scale Order Codes (products in bold are normally stock in North America)

| Scale | Range | Connection | Code |
|---|---|---|---|
| 8” (200mm) | 40°F to 280°F & 5°C to 135°C | Straight | **TSW172** |
| | | Angle | **TSW173** |

Other ranges and connection sizes available upon request.

# TSW, TSW-LF Hot Water Thermometer, Lead Free Hot Water Thermometer

## TSW-LF Dial Order Codes (products in bold are normally stock in North America)

| Dial | Range | Connection | Code |
|---|---|---|---|
| 2" (50mm) | 30°F to 250°F & 0°C to 120°C | 1/2" NPT centre back | **TSW174-2LF** |
| 2.5" (63mm) | 30°F to 250°F & 0°C to 120°C | 1/2" NPT centre back | **TSW174LF** |
| | | 3/4" Sweatwell | TSW174-SWLF |

Other ranges, stem lengths, dial and connection sizes available upon request.

## TSW-LF Scale Order Codes (products in bold are normally stock in North America)

| Scale | Range | Connection | Code |
|---|---|---|---|
| 8" (200mm) | 40°F to 280°F & 5°C to 135°C | Straight | **TSW172LF** |
| | | Angle | **TSW173LF** |

Other ranges and connection sizes available upon request.

## Thermowell Order Codes (products in bold are normally stock in North America)

| Connection | Material | Code |
|---|---|---|
| 1/2" NPT (for TSW174-2) | Lead Free Brass | TSW45LF |
| 1/2" NPT (for TSW174) | Lead Free Brass | **TSW65LF** |
| 1/2" NPT (for TSW174-SW) | Lead Free Brass | **TSW85LF** |
| 1/2" NPT (for TSW172 & TSW173) | Lead Free Brass | TSW25LF |

### 2" Dial Type

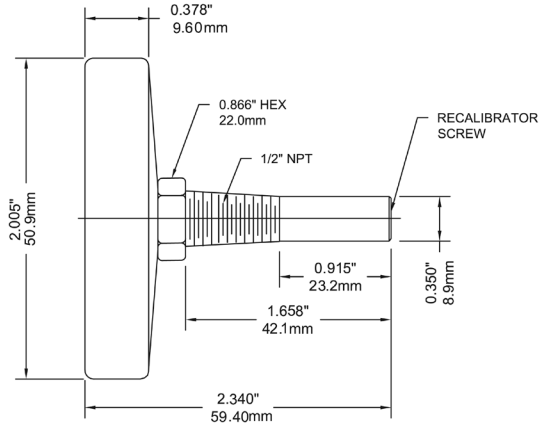


### 2.5" Dial Type

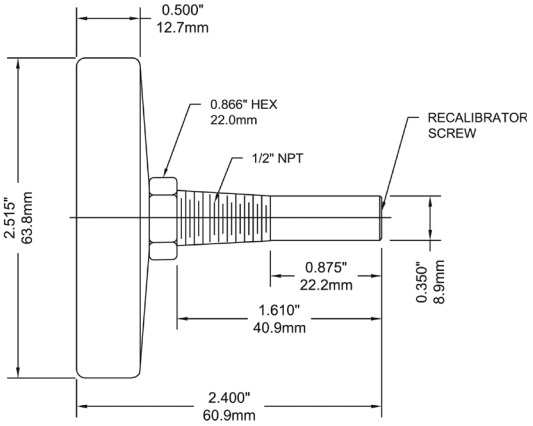


### Scale Type

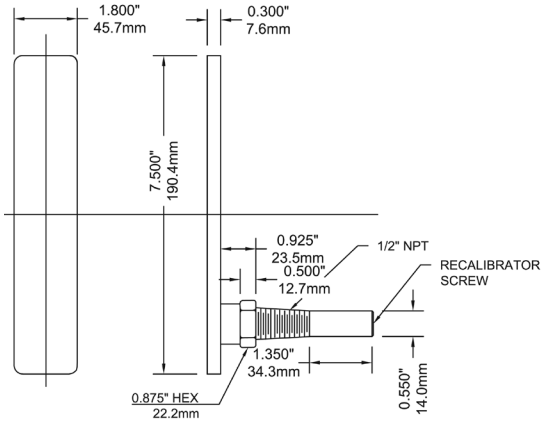


Back Connection

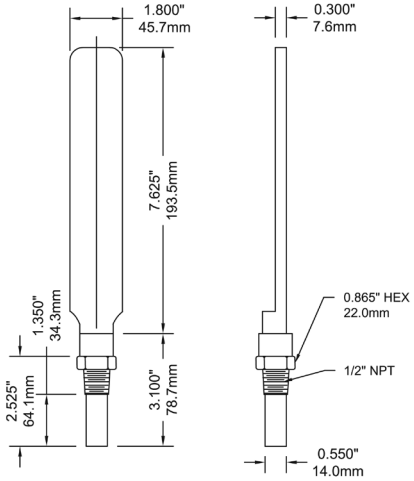


Bottom Connection

# TSW, TSW-LF — Hot Water Thermometer, Lead Free Hot Water Thermometer

## Engineering Codes

T S W - □□ - □□□ - □ - □□ - □□ - □□ - □□ - □ - □□□□

| TSW SERIES | | |
|---|---|---|
| **DIAL OR SCALE SIZE** | 2.0" (50MM), DIAL | 2 0 |
| | 2.5" (63mm), DIAL | 2 5 |
| | 8" (200mm), SCALE | 8 0 |
| **PRESSURE SCALE & RANGE** | SEE TEMPERATURE RANGES BELOW | # # # |
| **CASE MATERIAL** | ALUMINUM | A |
| **WETTED PARTS** | BRASS/BRONZE | B R |
| **PROCESS CONNECTION SIZE (MALE)** | 1/2" | N 2 |
| | 3/8" | N 3 |
| | 3/4" | N 5 |
| **PROCESS CONNECTION TYPE** | NPT | N |
| | BSPP (G), PARALLEL | G |
| | BSPT (R), TAPERED | R |
| | SWEATWELL | S W |
| **PROCESS CONNECTION LOCATION** | BOTTOM, STEM | B |
| | CENTRE Back | C B |
| | ANGLE, BACK (SCALE ONLY) | A B |
| **ACCURACY %** | 1.0 | I |
| **OPTIONS, LIST IN ALPHA-NUMERIC ORDER** | ACRYLIC LENS | A L |
| | POLYCARBONATE LENS | P L |
| | SAFETY GLASS, LAMINATED | S G |
| | SAFETY GLASS, TEMPERED | T G |
| | THERMOWELL BRASS | T B |
| | THERMOWELL BRASS LEAD FREE | T L F |
| | THERMOWELL 304SS | T S |
| | THERMOWELL 316SS | T S S |
| | 316SS POLISHED RING | 6 R |
| | RED SET POINTER | R S P |
| | ROSH COMPLIANT | R |
| | SPECIAL | Z # # # |

## Temperature Ranges

| F & C, DUAL SCALE | CODE |
|---|---|
| 30/250°F & 0/120°C | T40 |
| 40/280°F & 5/135°C | T41 |
| 25/125°F & - 5/50°C | T42 |

# TTD Tridicator



Optional Thermowell

## Description & Features:

- Measures both pressure and temperature on the same dial
- 2.5” (63mm) and 3” (75mm) dials
- Dual scale (°F & °C)
- Back or bottom connection
- Brass wetted parts
- 1” (25mm), 2” (50mm) and 2.5” (63mm) stems
- Multiple pressure and temperature ranges available
- Can be used with TST thermowells
- Ranges are compliant to industry standard ASME Boiler Code Section IV HG-612
- 5 year warranty

## Applications:

- Hot water and steam pressure for boilers

| Specifications | |
|---|---|
| **Dial** | 2.5” (63mm), 3” (75mm) aluminum, painted white |
| **Case** | Steel, painted black |
| **Lens** | 2.5” (63mm): Acrylic, threaded<br>3” (75mm): Glass |
| **Ring** | 3” (75mm): Chrome |
| **Stem** | Brass |
| **Socket** | Brass |
| **Tube** | Phosphor bronze |
| **Movement** | Brass and phosphor bronze |
| **Sensing Element** | Temperature: Bi-metallic coil<br>Pressure: Bourdon tube |
| **Pointer** | Aluminum, anodized black |
| **Welding** | Tin-alloy solder |
| **Pressure Limit** | 75% of full scale range |
| **Ambient Temperature** | 23°F to 122°F (-5°C to 50°C) |
| **Process Temperature** | 75% of full scale range |
| **Accuracy** | Pressure: ±3-2-3%<br>Temperature: ±3% of full scale |
| **Enclosure Rating** | IP50 |
| **Warning** | **WARNING:** This product can expose you to chemicals including lead, which is known to the State of California to cause cancer and birth defects or other reproductive harm. For more information go to www.P65Warnings.ca.gov. |

## Order Codes (products in bold are normally stock in North America)

| Range | Dial | Connection | Stem Length | Code | Tridicator Shut-off Thermowell |
|---|---|---|---|---|---|
| 0-75psi/kPa, 70°F to 320°F & 20°C to 160°C | 2.5" (63mm) | 1/4" NPT, Back | 1" (25mm) | **TTD410** | - |
| 0-75psi/kPa, 70°F to 320°F & 20°C to 160°C | 2.5" (63mm) | 1/4" NPT, Extension Back | 2" (50mm) | **TTD401** | TST025 |
| 0-75psi/kPa, 70°F to 320°F & 20°C to 160°C | 2.5" (63mm) | 1/4" NPT, Back | 2" (50mm) | **TTD404** | |
| 0-75psi/kPa, 70°F to 320°F & 20°C to 160°C | 3" (75mm) | 1/2" NPT, Bottom | 2.5" (63mm) | **TTD403** | TST050 |
| 0-75psi/kPa, 70°F to 320°F & 20°C to 160°C | 3" (75mm) | 1/2" NPT, Back | 2.5" (63mm) | **TTD402** | |
| 0-100psi/kPa, 70°F to 320°F & 20°C to 160°C | 3" (75mm) | 1/2" NPT, Bottom | 2.5" (63mm) | **TTD409** | |
| 0-100psi/kPa, 70°F to 320°F & 20°C to 160°C | 3" (75mm) | 1/2" NPT, Back | 2.5" (63mm) | **TTD408** | |
| 0-200psi/kPa, 70°F to 320°F & 20°C to 160°C | 3" (75mm) | 1/2" NPT, Bottom | 2.5" (63mm) | **TTD405** | |
| 0-200psi/kPa, 70°F to 320°F & 20°C to 160°C | 3" (75mm) | 1/2" NPT, Back | 2.5" (63mm) | **TTD407** | |
| 0-250psi/kPa, 70°F to 320°F & 20°C to 160°C | 3" (75mm) | 1/2" NPT, Bottom | 2.5" (63mm) | **TTD399** | |
| 0-250psi/kPa, 70°F to 320°F & 20°C to 160°C | 3" (75mm) | 1/2" NPT, Back | 2.5" (63mm) | **TTD398** | |

Other ranges, stem lengths, dial and connection sizes available upon request.

### Option Suffix:

FAF0015(Bushing) = ¼" NPT internal to ½ NPT external glass bushing; for TTD410, TTD401 and TTD404

### 2.5" Back Connection, 1" Stem

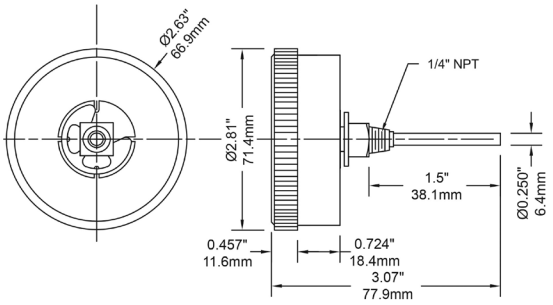


### 2.5" Back Connection

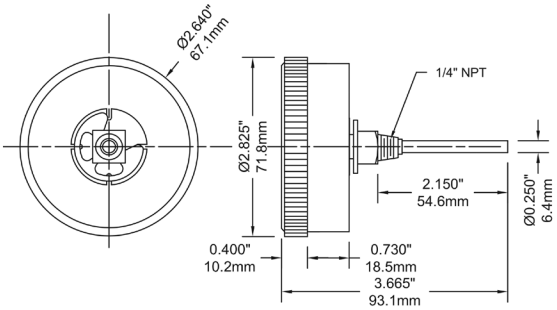


### 2.5" Extension Back Connection

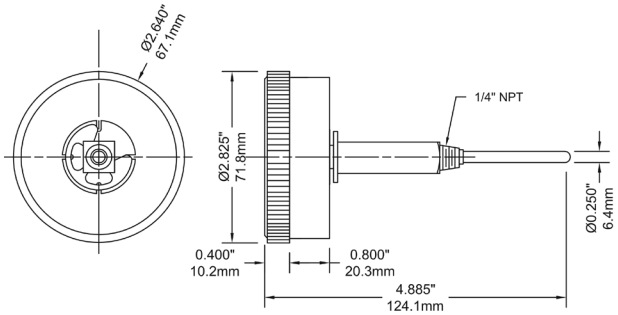


### 3" Bottom Connection

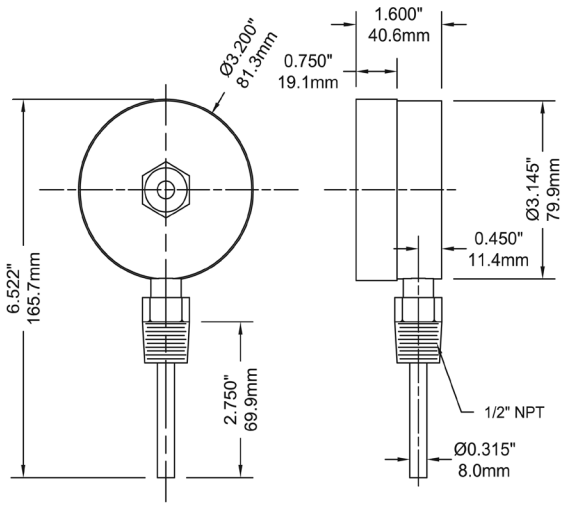


### 3" Back Connection

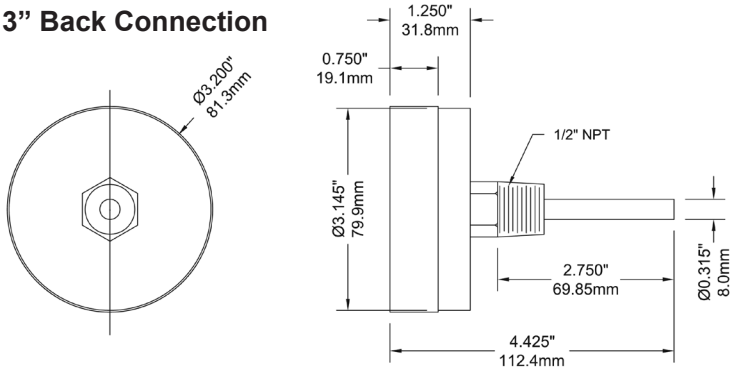

# TBR Bi-Metal Threaded Thermowell



RoHS compliant

RoHS applies only to 304 SS and 316 SS thermowells

## Description & Features:

- Available in a wide range of materials for use on most applications
- Standard “stepped construction” offering is complemented by an array of custom thermowells including: straight, tapered, sanitary and flanged configurations
- CRN registered
- 5 year warranty

## Applications:

- Allows for the creation of a “sealed system”, whereby the thermometer can be removed from the application without the need for shutting down or draining the system
- To protect the thermometer from possible exposure to the process media

| Specifications | |
|---|---|
| **Thermometer Connection** | 1/2” NPTF connection standard<br>Other thread sizes are available upon request |
| **Process Connection** | 3/4”, 1/2” or 1” NPT connection standard<br>Other thread sizes are available upon request |
| **Bore** | 0.260” (6.5mm) bore standard |
| **Construction** | Stepped construction standard<br>Tapered construction available upon request |
| **Material** | Brass, 304 SS, 316 SS standard<br>Other materials available upon request |
| **Warning (brass thermowells only** | ⚠ **WARNING:** This product can expose you to chemicals including lead, which is known to the State of California to cause cancer and birth defects or other reproductive harm. For more information go to www.P65Warnings.ca.gov. |

| Material | Pressure - Temperature Rating (PSI) | | | | | | |
|---|---|---|---|---|---|---|---|
| | 70°F (21°C) | 200°F (93°C) | 400°F (204°C) | 600°F (316°C) | 800°F (427°C) | 1,000°F (538°C) | 1,200°F (649°C) |
| Brass | 5,000 | 4,200 | 1,000 | - | - | - | - |
| 304 SS | 7,000 | 6,200 | 5,600 | 5,400 | 5,200 | 4,500 | 1,650 |
| 316 SS | 7,000 | 7,000 | 6,400 | 6,200 | 6,100 | 5,100 | 2,500 |

Note: For process media velocities above 10m/s (30 feet/s) contact Winters

# TBR Bi-Metal Threaded Thermowell

**Order Codes (Thermowells without lag. Products in bold are normally stock in North America)**

| Stem Length A | NPT Connection P | Material | Code | Standard Insertion Length U | Shank Diameter |
|---|---|---|---|---|---|
| **2.5" (63mm)** | 1/2" | Brass | **TBR2550** | 1-3/8" (35mm) | 1/2" (12.5mm) |
| | | 304 SS | **TBR2550-1** | | |
| | | 316 SS | TBR2550-2 | | |
| | 3/4" | Brass | **TBR25** | | |
| | | 304 SS | **TBR25-1** | | |
| | | 316 SS | **TBR25-2** | | |
| **4" (100mm)** | 1/2" | Brass | **TBR3550** | 2.5" (63mm) | 1/2" (12.5mm) |
| | | 304 SS | **TBR3550-1** | | |
| | | 316 SS | TBR3550-2 | | |
| | 3/4" | Brass | **TBR35** | | |
| | | 304 SS | **TBR35-1** | | |
| | | 316 SS | **TBR35-2** | | |
| | 1" | Brass | TBR35100 | | |
| | | 304 SS | TBR35100-1 | | |
| | | 316 SS | TBR35100-2 | | |
| **6" (150mm)** | 1/2" | Brass | **TBR650** | 4.5" (115mm) | 5/8" (16mm) |
| | | 304 SS | **TBR650-1** | | |
| | | 316 SS | TBR650-2 | | |
| | 3/4" | Brass | **TBR6** | | 3/4" (19mm) |
| | | 304 SS | **TBR6-1** | | |
| | | 316 SS | **TBR6-2** | | |
| | 1" | Brass | TBR6100 | | 7/8" (22mm) |
| | | 304 SS | TBR6100-1 | | |
| | | 316 SS | TBR6100-2 | | |
| **9" (229mm)** | 1/2" | Brass | TBR950 | 7.5" (190mm) | 5/8" (16mm) |
| | | 304 SS | TBR950-1 | | |
| | | 316 SS | TBR950-2 | | |
| | 3/4" | Brass | TBR9 | | 3/4" (19mm) |
| | | 304 SS | **TBR9-1** | | |
| | | 316 SS | TBR9-2 | | |
| | 1" | Brass | TBR9100 | | 7/8" (22mm) |
| | | 304 SS | TBR9100-1 | | |
| | | 316 SS | TBR9100-2 | | |
| **12" (305mm)** | 1/2" | Brass | TBR1250 | 10.5" (266mm) | 5/8" (16mm) |
| | | 304 SS | TBR1250-1 | | |
| | | 316 SS | TBR1250-2 | | |
| | 3/4" | Brass | TBR12 | | 3/4" (19mm) |
| | | 304 SS | TBR12-1 | | |
| | | 316 SS | TBR12-2 | | |
| | 1" | Brass | TBR12100 | | 7/8" (22mm) |
| | | 304 SS | TBR12100-1 | | |
| | | 316 SS | TBR12100-2 | | |
| **15" (370mm)** | 3/4" | Brass | TBR15 | 13" (330mm) | 3/4" (19mm) |
| | | 304 SS | TBR15-1 | | |
| | | 316 SS | TBR15-2 | | |

# TBR Bi-Metal Threaded Thermowell

## Order Codes (Thermowells with lag.)

| Stem Length A | NPT Connection P | Material | Code | Standard Insertion Length U | Lag Length T | Shank Diameter |
|---|---|---|---|---|---|---|
| 6" (150mm) | 1/2" | Brass | TBRN650 | 2.5" (63mm) | 2" (50mm) | 1/2" (12.5mm) |
| | | 304 SS | TBRN650-1 | | | |
| | | 316 SS | TBRN650-2 | | | |
| | 3/4" | Brass | **TBRN6** | | | |
| | | 304 SS | TBRN6-1 | | | |
| | | 316 SS | TBRN6-2 | | | |
| | 1" | Brass | TBRN6100 | | | |
| | | 304 SS | TBRN6100-1 | | | |
| | | 316 SS | TBRN6100-2 | | | |
| 9" (229mm) | 1/2" | Brass | TBRN950 | 4.5" (115mm) | 3" (75mm) | 5/8" (16mm) |
| | | 304 SS | TBRN950-1 | | | |
| | | 316 SS | TBRN950-2 | | | |
| | 3/4" | Brass | TBRN9 | | | 3/4" (19mm) |
| | | 304 SS | TBRN9-1 | | | |
| | | 316 SS | TBRN9-2 | | | |
| | 1" | Brass | TBRN9100 | | | 7/8" (22mm) |
| | | 304 SS | TBRN9100-1 | | | |
| | | 316 SS | TBRN9100-2 | | | |
| 12" (305mm) | 1/2" | Brass | TBRN1250 | 7.5" (190mm) | | 5/8" (16mm) |
| | | 304 SS | TBRN1250-1 | | | |
| | | 316 SS | TBRN1250-2 | | | |
| | 3/4" | Brass | TBRN12 | | | 3/4" (19mm) |
| | | 304 SS | TBRN12-1 | | | |
| | | 316 SS | TBRN12-2 | | | |
| | 1" | Brass | TBRN1210 | | | 7/8" (22mm) |
| | | 304 SS | TBRN1210-1 | | | |
| | | 316 SS | TBRN1210-2 | | | |

Other configurations available. 1/4" NPT thermometer connection available. BSP threads available upon request. Tapered construction available upon request. Other lengths available up to 48" (welded construction only). Other materials such as Monel®, Inconel®, Hastelloy® C and Titanium are available upon request.

Note: Standard well is stepped as shown to 0.5" OD except U=2.5". Straight shank supplied as an option. Specify additional lagging extensions as needed

Hastelloy® is a registered trademark of Haynes International, Inc.
Inconel® is a registered trademark of Special Metals Corporation
Monel® is a registered trademark of Inco Alloys International

## Standard Thermowell without lag

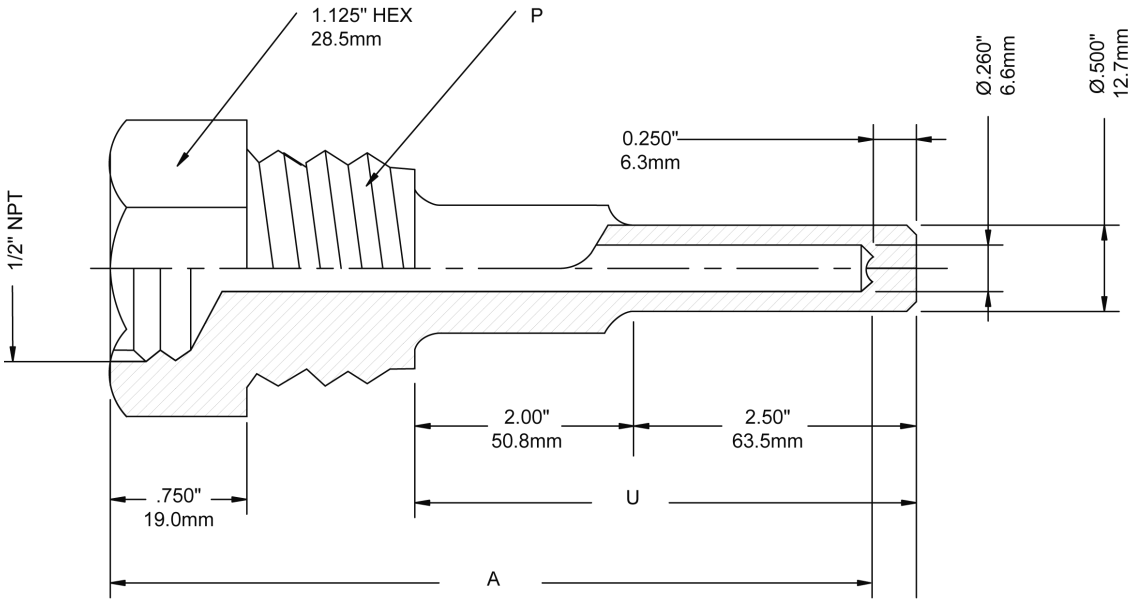


## Standard Thermowell with lag

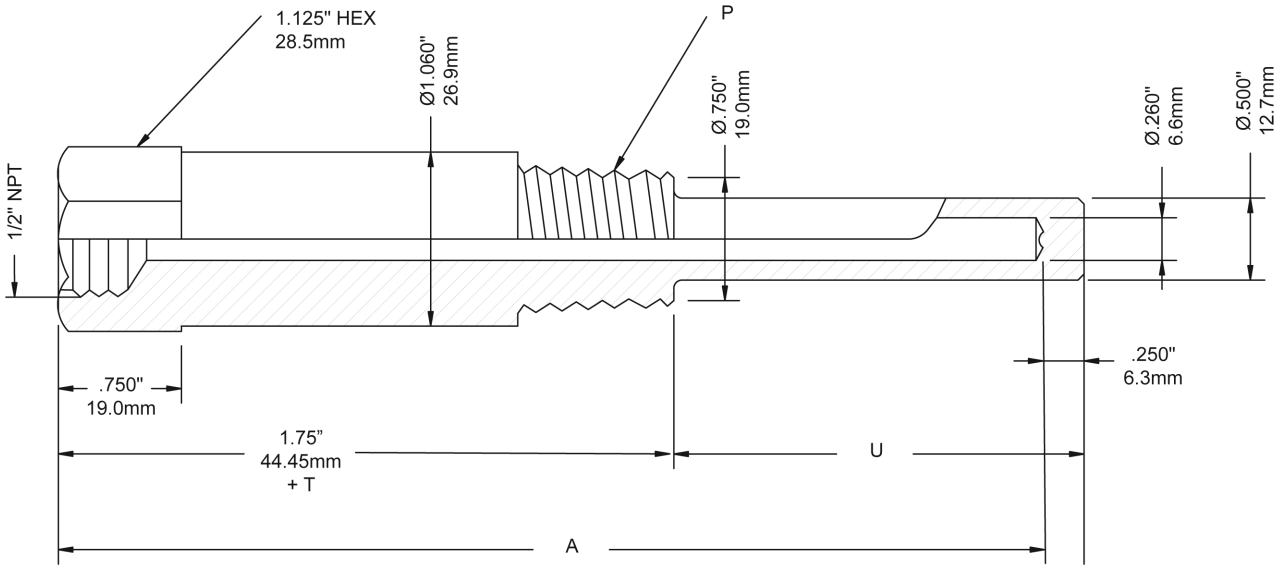

# TBR Bi-Metal Threaded Thermowell

## Engineering Codes

| TBR SERIES | | T B R - | | | - | | | - | | | - | | - | | | - | | | - | | | - | | - | | - | | | | |
|---|---|---|---|---|---|---|---|---|---|---|---|---|---|---|---|---|---|---|---|---|---|---|---|---|---|---|---|---|---|---|
| **Thermowell Type** | STEPPED | | S | T | | | | | | | | | | | | | | | | | | | | | | | | | | |
| | STRAIGHT | | S | R | | | | | | | | | | | | | | | | | | | | | | | | | | |
| | TAPPERED | | T | P | | | | | | | | | | | | | | | | | | | | | | | | | | |
| | HELICAL / VORTEX | | H | V | | | | | | | | | | | | | | | | | | | | | | | | | | |
| **Instrument Connection** | 1/4" NPT FEMALE | | | | F | 4 | | | | | | | | | | | | | | | | | | | | | | | | |
| | 3/8" NPT FEMALE | | | | F | 3 | | | | | | | | | | | | | | | | | | | | | | | | |
| | 1/2" NPT FEMALE | | | | F | 2 | | | | | | | | | | | | | | | | | | | | | | | | |
| | G 1/4" FEMALE | | | | C | 4 | | | | | | | | | | | | | | | | | | | | | | | | |
| | G 3/8" FEMALE | | | | C | 3 | | | | | | | | | | | | | | | | | | | | | | | | |
| | G 1/2" FEMALE | | | | C | 2 | | | | | | | | | | | | | | | | | | | | | | | | |
| **Process Connection** | 1/4" NPT MALE | | | | | | N | 4 | | | | | | | | | | | | | | | | | | | | | | |
| | 3/8" NPT MALE | | | | | | N | 3 | | | | | | | | | | | | | | | | | | | | | | |
| | 1/2" NPT MALE | | | | | | N | 2 | | | | | | | | | | | | | | | | | | | | | | |
| | 3/4" NPT MALE | | | | | | N | 5 | | | | | | | | | | | | | | | | | | | | | | |
| | 1" NPT MALE | | | | | | N | 1 | | | | | | | | | | | | | | | | | | | | | | |
| | G 1/4" MALE | | | | | | G | 4 | | | | | | | | | | | | | | | | | | | | | | |
| | G 3/8" MALE | | | | | | G | 3 | | | | | | | | | | | | | | | | | | | | | | |
| | G 1/2" MALE | | | | | | G | 2 | | | | | | | | | | | | | | | | | | | | | | |
| | G 3/4" MALE | | | | | | G | 5 | | | | | | | | | | | | | | | | | | | | | | |
| | G 1" MALE | | | | | | G | 1 | | | | | | | | | | | | | | | | | | | | | | |
| | M14*1.5 | | | | | | M | 4 | | | | | | | | | | | | | | | | | | | | | | |
| | M20*1.5 | | | | | | M | 2 | | | | | | | | | | | | | | | | | | | | | | |
| **Process Insertion Length** | 2" | | | | | | | | 2 | | | | | | | | | | | | | | | | | | | | | |
| (U dimension) | 2.5" | | | | | | | | 2 | 5 | | | | | | | | | | | | | | | | | | | | |
| | 4" | | | | | | | | 4 | | | | | | | | | | | | | | | | | | | | | |
| | 6" | | | | | | | | 6 | | | | | | | | | | | | | | | | | | | | | |
| | 7" | | | | | | | | 7 | | | | | | | | | | | | | | | | | | | | | |
| | 9" | | | | | | | | 9 | | | | | | | | | | | | | | | | | | | | | |
| | 10" | | | | | | | | 1 | 0 | | | | | | | | | | | | | | | | | | | | |
| | 12" | | | | | | | | 1 | 2 | | | | | | | | | | | | | | | | | | | | |
| | 13" | | | | | | | | 1 | 3 | | | | | | | | | | | | | | | | | | | | |
| | 15" | | | | | | | | 1 | 5 | | | | | | | | | | | | | | | | | | | | |
| | 16" | | | | | | | | 1 | 6 | | | | | | | | | | | | | | | | | | | | |
| | 19" | | | | | | | | 1 | 9 | | | | | | | | | | | | | | | | | | | | |
| | 21" | | | | | | | | 2 | 1 | | | | | | | | | | | | | | | | | | | | |
| | 22" | | | | | | | | 2 | 2 | | | | | | | | | | | | | | | | | | | | |
| **Lagging (T Dimension)** | NO LAG | | | | | | | | | | 0 | | | | | | | | | | | | | | | | | | | |
| | 1" (25mm) | | | | | | | | | | 1 | | | | | | | | | | | | | | | | | | | |
| | 2" (50mm) | | | | | | | | | | 2 | | | | | | | | | | | | | | | | | | | |
| | 3" (76mm) | | | | | | | | | | 3 | | | | | | | | | | | | | | | | | | | |
| | 4" (100mm) | | | | | | | | | | 4 | | | | | | | | | | | | | | | | | | | |
| | 5" (125mm) | | | | | | | | | | 5 | | | | | | | | | | | | | | | | | | | |
| | 6" (150mm) | | | | | | | | | | 6 | | | | | | | | | | | | | | | | | | | |
| **Root Diameter** | 0.50" (12.7mm) | | | | | | | | | | | | R | 1 | | | | | | | | | | | | | | | | |
| | 0.63" (16mm) | | | | | | | | | | | | R | 2 | | | | | | | | | | | | | | | | |
| | 0.75" (19mm) | | | | | | | | | | | | R | 3 | | | | | | | | | | | | | | | | |
| | 0.866" (22 mm) | | | | | | | | | | | | R | 4 | | | | | | | | | | | | | | | | |
| | 1.063" (27 mm) | | | | | | | | | | | | R | 5 | | | | | | | | | | | | | | | | |
| **Tip Diameter** | 0.512" (13 mm) | | | | | | | | | | | | | | T | 1 | | | | | | | | | | | | | | |
| | 0.63" (16mm) | | | | | | | | | | | | | | T | 2 | | | | | | | | | | | | | | |
| | 0.75" (19mm) | | | | | | | | | | | | | | T | 3 | | | | | | | | | | | | | | |
| **Bore (Inner) Diameter** | 0.260" (6.6mm), STANDARD | | | | | | | | | | | | | | | | B | 1 | | | | | | | | | | | | |
| (Not applicable for Straight) | 0.276" (7 mm) | | | | | | | | | | | | | | | | B | 2 | | | | | | | | | | | | |
| | 0.355" (8.5 mm) | | | | | | | | | | | | | | | | B | 3 | | | | | | | | | | | | |
| | 0.385" (9.8mm) | | | | | | | | | | | | | | | | B | 4 | | | | | | | | | | | | |
| | 0.417" (10.6 mm) | | | | | | | | | | | | | | | | B | 5 | | | | | | | | | | | | |
| | 0.50" (13mm) | | | | | | | | | | | | | | | | B | 6 | | | | | | | | | | | | |
| **Tip Thickness** | 0.20" (5 mm) | | | | | | | | | | | | | | | | | | 1 | | | | | | | | | | | |
| | 0.25" (6.35 mm) | | | | | | | | | | | | | | | | | | 2 | | | | | | | | | | | |
| | 0.28" (7 mm) | | | | | | | | | | | | | | | | | | 3 | | | | | | | | | | | |

# TBR Bi-Metal Threaded Thermowell

| TBR SERIES | | T B R - □□ - □□ - □□ - □□ - □ - □□ - □□ - □□ - □ - □□ - □□□□ |
|---|---|---|
| **Material** | BRASS/BRONZE | B R |
| | CARBON STEEL | C S |
| | 304SS | S |
| | 316SS | S S |
| | 316L | S L |
| | 316/316L SS DUAL CERTIFIED | D C |
| | DUPLEX | D |
| | SUPER DUPLEX | S D |
| | MONEL 400 | M |
| | HASTELLOY C-276 | H C |
| | TITANIUM | T I |
| | TANTALUM | T A |
| | INCONEL 825 | I 8 |
| | INCONEL 625 | I 7 |
| | INCONEL 600 | I 6 |
| **Option Codes** | BRASS CAP AND CHAIN 1/2" | W 6 0 |
| **List In Alpha-Numeric Order** | 304SS CAP AND CHAIN 1/2" | W 6 0 1 |
| | 316SS CAP AND CHAIN 1/2" | W 6 0 2 |
| | 316LSS CAP AND CHAIN 1/2" | W 6 0 3 |
| | MARKINGS ON THERMOWELL | P M |
| | HEAT TRANSFER COMPOUND | H T |
| | CRN REGISTERED | C |
| | ROSH COMPLIANT | R |
| | NACE COMPLIANT | N |
| | SPECIAL | Z # # # |

# TDF Duct Flange

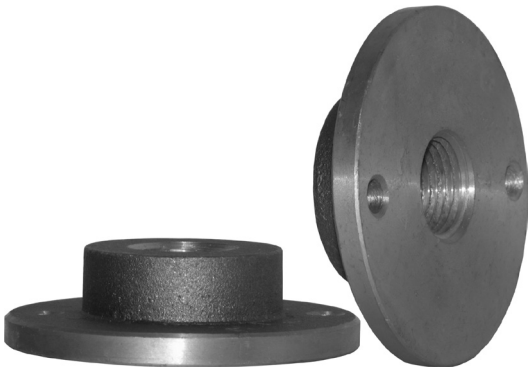

## Description & Features:

- Ideal for ventilation installations
- Lightweight aluminum construction for durable mounting
- Instrument connections available for both TIM and TBM thermometers
- 304 SS and 316 SS options available
- 5 year warranty

## Applications:

- Specially designed for heating and air conditioning ventilation systems in residential and commercial buildings and industrial plants

| Specifications | |
|---|---|
| **Material** | Aluminum |
| **Thermometer Connection** | 1-1/4”-18 UNEF or 1/2” NPTF |

## Order Codes

| Thermometer | Thermometer Connection | Thermometer | Code |
|---|---|---|---|
| TIM Series | 1-1/4”-18 UNEF | 2 hole | TDF100 |
| TBM Series | 1/2” NPT | | TDF200 |

3 or 4 hole options available.

### TDF100

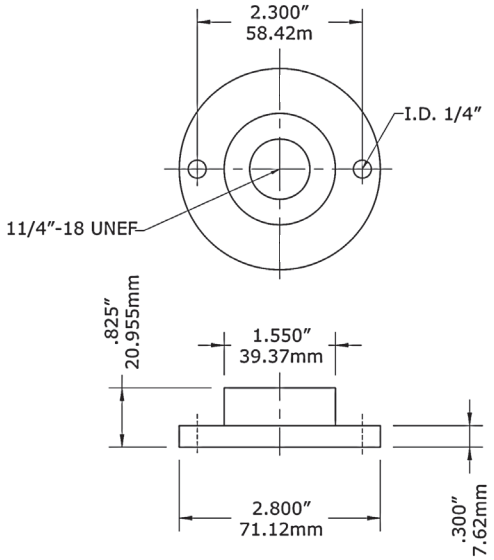


### TDF200

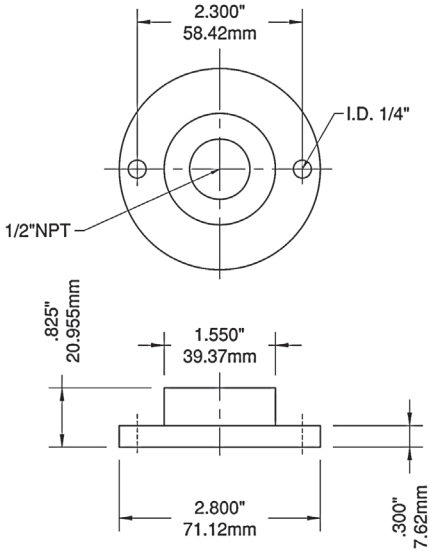

# TIW, TIW-LF Industrial Thermowell, Lead Free Industrial Thermowell



## Description & Features:

- Designed for use with all 9" (230mm) industrial thermometers to create a "sealed system"
- Allows the easy replacement of thermometers without the need to shut down or drain the system
- CAN/CGSB-14.4-M88 compliant
- CRN registered
- 5 year warranty

## Applications:

- HVAC, pipes, chill water and hot water lines
- Lead free version for potable water systems

LEAD FREE

RoHS compliant

Note: RoHS applies only to 304 SS and 316 SS thermowells

| Specifications | |
|---|---|
| **Material** | TIW: Brass, AISI 304 SS, AISI 316 SS<br>TIW-LF: Lead free brass |
| **Bore Diameter** | 7/16" tapered |
| **Form** | Stepped standard, straight available |
| **Thermometer Connection** | 1-1/4" UNF |
| **Process Connection** | 3/4" NPTM standard |
| **Warning (brass and lead free brass thermowells only)** | ⚠ **WARNING:** This product can expose you to chemicals including lead, which is known to the State of California to cause cancer and birth defects or other reproductive harm. For more information go to www.P65Warnings.ca.gov. |

## TIW Thermowell Order Codes (products in bold are normally stock in North America)

| Stem Length | Overall Length | Material | Insertion Length | Lagging Extension | 1/2" NPT Connection | 3/4" NPT Connection |
|---|---|---|---|---|---|---|
| **3.5" Without Lagging** | 4.25" (108mm) | Brass | 2.5" (63mm) | - | - | **TIW01** |
| | | 304 SS | | | - | **TIW01-1** |
| | | 316 SS | | | - | TIW01-2 |
| **3.5" With Lagging** | 4.25" (108mm) | Brass | 1.75" (44mm) | 1" (25mm) | **TIW02** | **TIW03** |
| | | 304 SS | | | TIW02-1 | TIW03-1 |
| | | 316 SS | | | TIW02-2 | TIW03-2 |
| **6" Without Lagging** | 6.75" (172mm) | Brass | 5" (127mm) | - | - | **TIW04** |
| | | 304 SS | | | - | **TIW04-1** |
| | | 316 SS | | | - | TIW04-2 |
| **6" With Lagging** | 6.75" (172mm) | Brass | 2.5" (63mm) | 2.5" (63mm) | - | TIW07 |
| | | 304 SS | | | - | TIW07-1 |
| | | 316 SS | | | - | TIW07-2 |

## TIW-LF Thermowell Order Codes (products in bold are normally stock in North America)

| Stem Length | Overall Length | Material | Insertion Length | Lagging Extension | 3/4" NPT Connection |
|---|---|---|---|---|---|
| **3.5" Without Lagging** | 4.25" (108mm) | Lead Free Brass | 2.5" (63mm) | - | **TIW01LF** |
| **3.5" With Lagging** | | Lead Free Brass | 1.75" (44mm) | 1" (25mm) | TIW03LF |
| **6" Without Lagging** | 6.75" (172mm) | Lead Free Brass | 5" (127mm) | - | **TIW04LF** |
| **6" With Lagging** | | Lead Free Brass | 2.5" (63mm) | 2.5" (63mm) | TIW07LF |

Other configurations available. Other threads available upon request. Longer thermowells available upon request.
Other materials such as Monel®, Inconel®, Hastelloy® C and Titanium are available upon request.

**Option suffix:**
W61 = Brass cap and chain (1.25" UNF)
W61-1 = SS cap and chain (1.25" UNF)

Hastelloy® is a registered trademark of Haynes International, Inc.
Inconel® is a registered trademark of Special Metals Corporation
Monel® is a registered trademark of Inco Alloys International

## 3.5” Stem Without Lagging

Material: 304 SS / 316 SS
Bore Diameter: 7/16” tapered
Construction: Stepped standard (straight available)
Thermometer connection: 1 1/4” UNEF

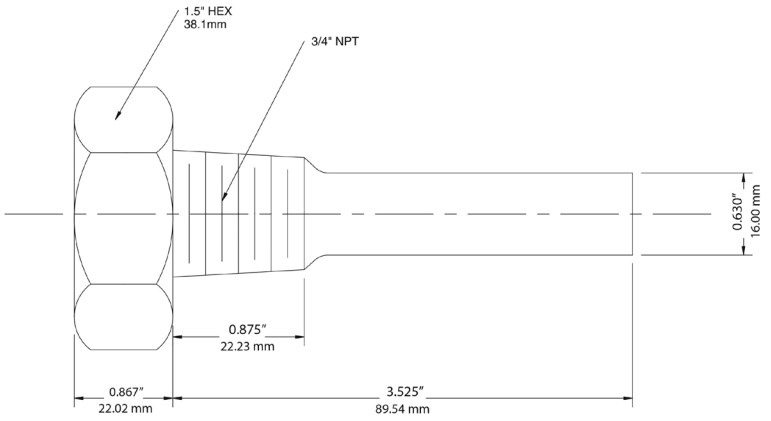


## 3.5” Stem With Lagging

Material: Brass / 304 SS / 316 SS
Bore Diameter: 7/16” tapered
Construction: Stepped standard (straight available)
Thermometer connection: 1 1/4” UNEF

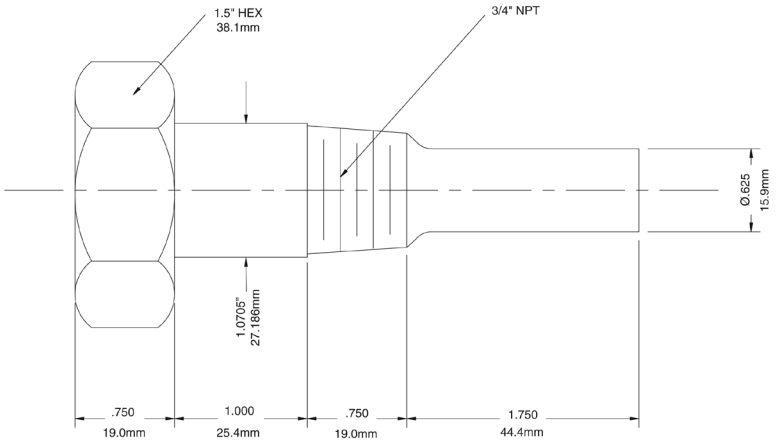

## 6” Stem Without Lagging

Material: Brass / 304 SS / 316 SS
Bore Diameter: 7/16" tapered
Construction: Stepped standard (straight available)
Thermometer connection: 1 1/4" UNEF

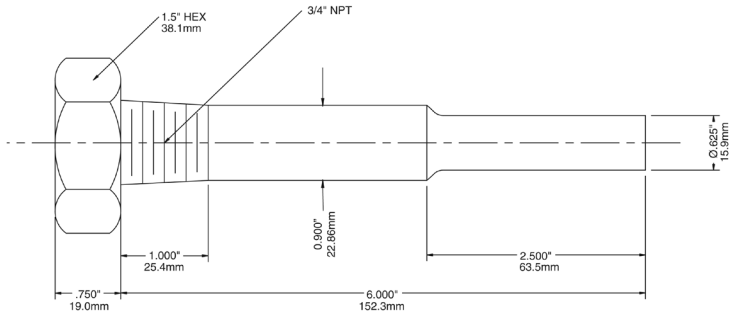


## 6” Stem With Lagging

Material: Brass / 304 SS / 316 SS
Bore Diameter: 7/16" tapered
Construction: Stepped standard (straight available)
Thermometer connection: 1 1/4" UNEF

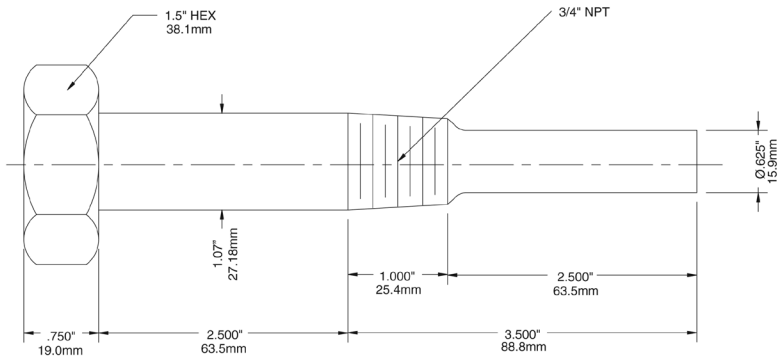

# TSN Sanitary Thermowell




## Description & Features:

- Allows for easy installation and replacement of bi-metallic dial thermometers without draining the process
- 3A approved
- 5 year warranty

## Applications:

- Designed specifically for the sanitary requirements of the food and dairy industries

| Specifications | |
|---|---|
| **Material** | 316 SS |
| **Connection** | 1.5” (40mm) or 2” (50mm) Tri-Clamp® |
| **Thermometer Connection** | 1/2” NPT |
| **Bore** | 0.260” (6.6mm) standard |
| **Other** | Lengths fit all standard bi-metal thermometers |

## Order Codes

| Tri-Clamp® | Stem Length | U Dimensions | Code |
|---|---|---|---|
| 1.5” (40mm) | 2.5” (63mm) | 1.5” (40mm) | TSN15SANI2 |
| | 4” (100mm) | 3” (75mm) | TSN15SANI4 |
| | 6” (150mm) | 5” (125mm) | TSN15SANI6 |
| | 9” (225mm) | 8” (200mm) | TSN15SANI9 |
| 2” (50mm) | 2.5” (63mm) | 1.5” (40mm) | TSN2SANI2 |
| | 4” (100mm) | 3” (75mm) | TSN2SANI4 |
| | 6” (150mm) | 5” (125mm) | TSN2SANI6 |
| | 9” (225mm) | 8” (200mm) | TSN2SANI9 |

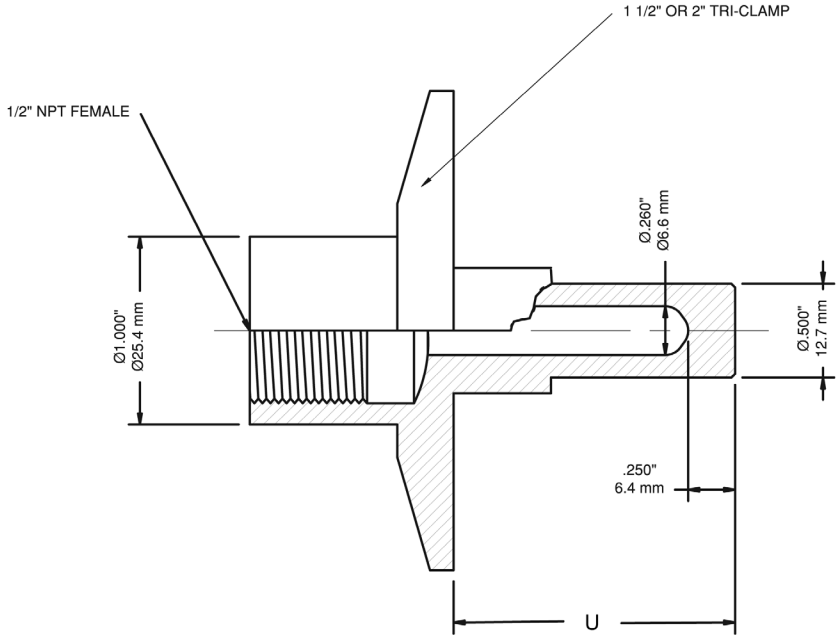


Tri-Clamp® is a registered trademark of Tri-Clover

# TST Tridicator Shut-off Thermowell

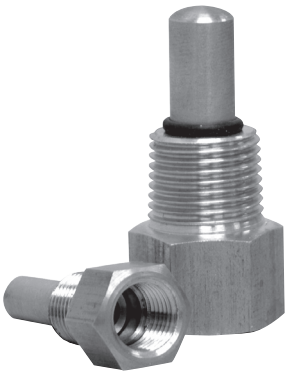

## Description & Features:

- Spring loaded allowing TST to stay open when tridicator is installed. Once tridicator is removed thermowell closes preventing media from exiting the system
- Minimizes system downtime with quick instrument replacement
- CRN registered
- Up to 250 psi pressure rating (matching TTD Tridicator)
- 5 year warranty

## Applications:

- Boilers and hydronic heating systems

| Specifications | |
|---|---|
| **Material** | Brass |
| **Tridicator Connection** | 1/4” or 1/2” NPTM standard |
| **Warning** | **WARNING:** This product can expose you to chemicals including lead, which is known to the State of California to cause cancer and birth defects or other reproductive harm. For more information go to www.P65Warnings.ca.gov. |

## Order Codes (products in bold are normally stock in North America)

| Stem Length | Maximum Extension (X) | Instrument & Pipe NPT Connection | Code |
|---|---|---|---|
| 1.92” (48.8mm) | 1.3" (33.8mm) | 1/4” | **TST025** |
| 2.65” (67.3mm) | 1.6" (41.5mm) | 1/2” | **TST050** |

## 1/4” TST025

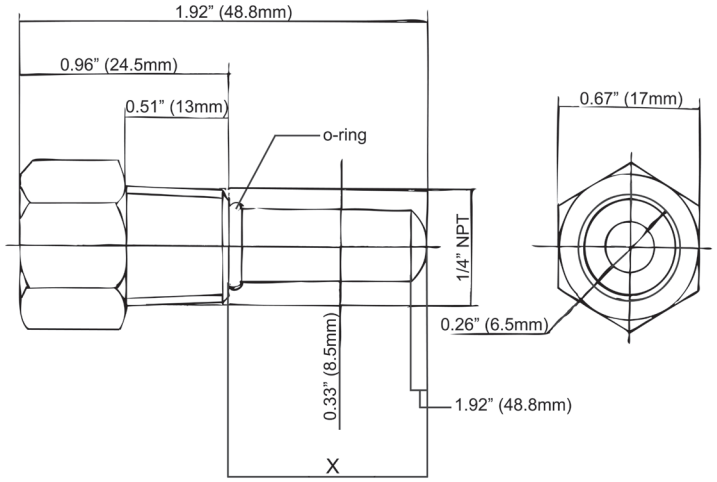


## 1/2” TST050

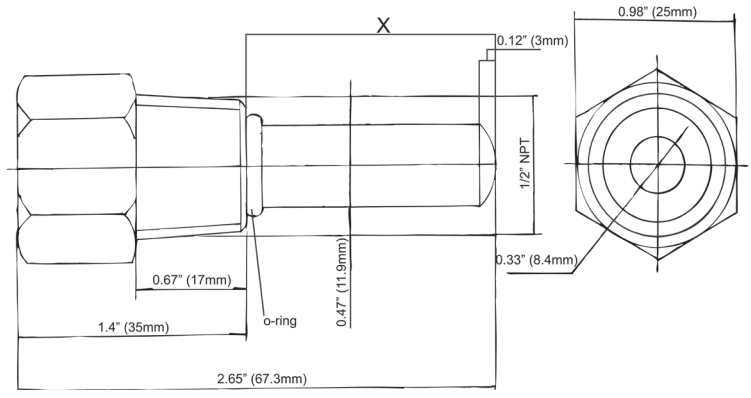

# TWF Flanged Bi-Metal Thermowell

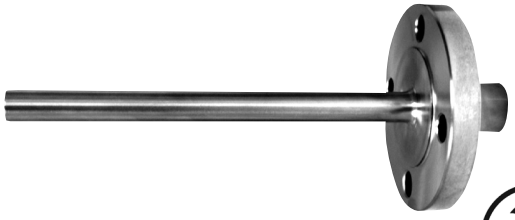

## Description & Features:

- Designed for use on a closed system
- 5 year warranty

## Applications:

- Isolates temperature sensor from process media

## Order Codes

| Element Length | U Dimension | Material | Flange Size and Rating | | |
|---|---|---|---|---|---|
| | | | 150# Code | | |
| | | | 1" (25mm) | 1.5" (40mm) | 2" (50mm) |
| 4" (100mm) stem | 2" (50mm) | 304 SS | TWF11504304 | TWF151504304 | TWF21504304 |
| | | 316 SS | TWF11504316 | TWF151504316 | TWF21504316 |
| 6" (150mm) stem | 4" (100mm) | 304 SS | TWF11506304 | TWF151506304 | TWF21506304 |
| | | 316 SS | TWF11506316 | TWF151506316 | TWF21506316 |
| 9" (225mm) stem | 7" (178mm) | 304 SS | TWF11509304 | TWF151509304 | TWF21509304 |
| | | 316 SS | TWF11509316 | TWF151509316 | TWF21509316 |
| 12" (300mm) stem | 10" (254mm) | 304 SS | TWF115012304 | TWF1515012304 | TWF215012304 |
| | | 316 SS | TWF115012316 | TWF1515012316 | TWF215012316 |
| 15" (370mm) stem | 13" (330mm) | 304 SS | TWF115015304 | TWF1515015304 | TWF215015304 |
| | | 316 SS | TWF115015316 | TWF1515015316 | TWF215015316 |
| **Element Length** | **U Dimension** | **Material** | **Flange Size and Rating** | | |
| | | | **300# Code** | | |
| | | | **1" (25mm)** | **1.5" (40mm)** | **2" (50mm)** |
| 4" (100mm) stem | 2" (50mm) | 304 SS | TWF13004304 | TWF153004304 | TWF23004304 |
| | | 316 SS | TWF13004316 | TWF153004316 | TWF23004316 |
| 6" (150mm) stem | 4" (100mm) | 304 SS | TWF13006304 | TWF153006304 | TWF23006304 |
| | | 316 SS | TWF13006316 | TWF153006316 | TWF23006316 |
| 9" (225mm) stem | 7" (178mm) | 304 SS | TWF13009304 | TWF153009304 | TWF23009304 |
| | | 316 SS | TWF13009316 | TWF153009316 | TWF23009316 |
| 12" (300mm) stem | 10" (254mm) | 304 SS | TWF130012304 | TWF1530012304 | TWF230012304 |
| | | 316 SS | TWF130012316 | TWF1530012316 | TWF230012316 |
| 15" (370mm) stem | 13" (330mm) | 304 SS | TWF130015304 | TWF1530015304 | TWF230015304 |
| | | 316 SS | TWF130015316 | TWF1530015316 | TWF230015316 |

Other configurations available.

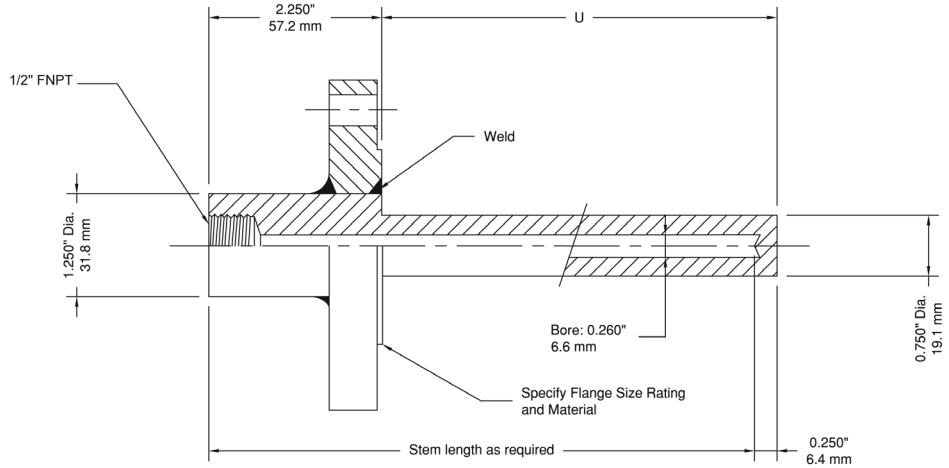

# TWF Flanged Bi-Metal Thermowell

## Engineering Codes

| TWF SERIES | | T W F - | - | - |

## Engineering Codes (Continued)

| TWF SERIES | | T W F - □□ - □□ - □□ - □□ - □□□ - □□□□ - □□ - □□ - □ - □ - □□ - □□ - □□ - □ - □□ - □□□□ |
|---|---|---|
| **Tip Thickness** | 0.20" (5 mm) | 1 |
| | 0.25" (6.35 mm) | 2 |
| | 0.28" (7 mm) | 3 |
| **Material** | BRASS/BRONZE | B R |
| | CARBON STEEL | C S |
| | 304SS | S |
| | 316SS | S S |
| | 316L | S L |
| | 316/316L SS DUAL CERTIFIED | D C |
| | DUPLEX | D |
| | SUPER DUPLEX | S D |
| | MONEL 400 | M |
| | HASTELLOY C-276 | H C |
| | TITANIUM | T I |
| | TANTALUM | T A |
| | INCONEL 825 | I 8 |
| | INCONEL 625 | I 7 |
| | INCONEL 600 | I 6 |
| **OPTION CODES,** | BRASS CAP AND CHAIN 1/2" | W 6 0 |
| **LIST IN ALPHA-NUMERIC ORDER** | 304SS CAP AND CHAIN 1/2" | W 6 0 1 |
| | 316SS CAP AND CHAIN 1/2" | W 6 0 2 |
| | 316LSS CAP AND CHAIN 1/2" | W 6 0 3 |
| | MARKINGS ON THERMOWELL | P M |
| | HEAT TRANSFER COMPOUND | H T |
| | CRN REGISTERED | C |
| | ROSH COMPLIANT | R |
| | NACE COMPLIANT | N |
| | SPECIAL | Z # # # |

# TWS Socket Weld Bi-Metal Thermowell

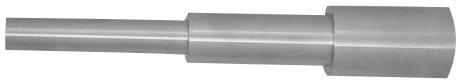

RoHS compliant

## Description & Features:

- Designed to be welded in place within the system
- Economical
- 5 year warranty

## Applications:

- Tanks or feed water system on boilers where no internal threads are available

| Specifications | |
|---|---|
| **Material** | 304 or 316 SS |
| **Thermometer Connection** | 1/2” NPT |
| **Bore** | 0.260” (6.5mm) standard |

## Order Codes

| Stem Length | Pipe Diameter | Dimension P | Dimension Q | Dimension U | Material | Code |
|---|---|---|---|---|---|---|
| 4” (100mm) | 3/4” | 1.05” (27mm) | 1/2” (12.5mm) | 2.5” (63mm) | 304 SS | TWS754304 |
| | | | | | 316 SS | TWS754316 |
| | 1” | 1.315” (33mm) | 7/8” (22mm) | | 304 SS | TWS14304 |
| | | | | | 316 SS | TWS14316 |
| 6” (150mm) | 3/4” | 1.05” (27mm) | 3/4” (19mm) | 4.5” (115mm) | 304 SS | TWS756304 |
| | | | | | 316 SS | TWS756316 |
| | 1” | 1.315” (33mm) | 7/8” (22mm) | | 304 SS | TWS16304 |
| | | | | | 316 SS | TWS16316 |
| 9” (230mm) | 3/4” | 1.05” (27mm) | 3/4” (19mm) | 7.5” (191mm) | 304 SS | TWS759304 |
| | | | | | 316 SS | TWS759316 |
| | 1” | 1.315” (33mm) | 7/8” (22mm) | | 304 SS | TWS19304 |
| | | | | | 316 SS | TWS19316 |
| 12” (300mm) | 3/4” | 1.05” (27mm) | 3/4” (19mm) | 10.5” (267mm) | 304 SS | TWS7512304 |
| | | | | | 316 SS | TWS7512316 |
| | 1” | 1.315” (33mm) | 7/8” (22mm) | | 304 SS | TWS112304 |
| | | | | | 316 SS | TWS112316 |

Other configurations available.

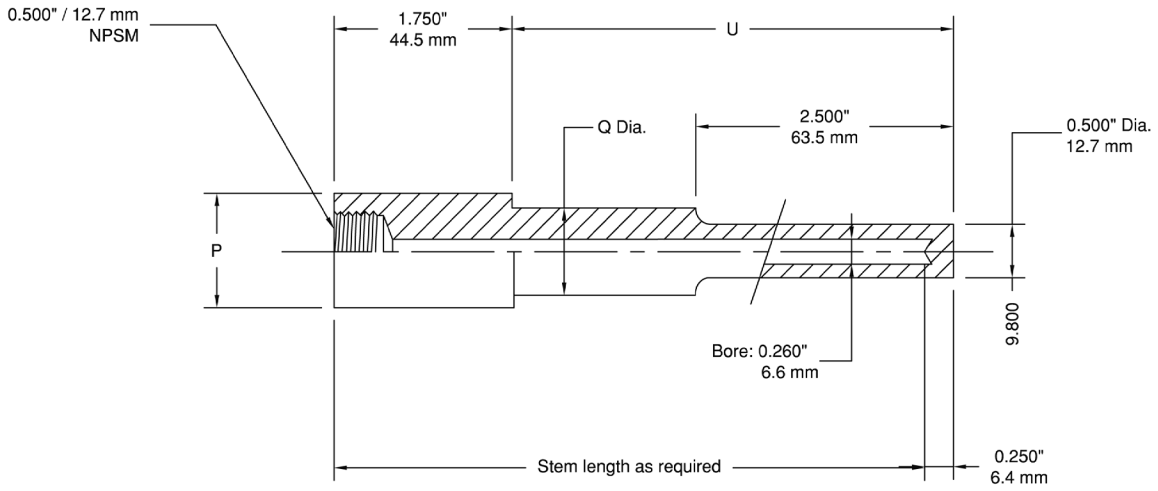

# TWW Weld-In Threaded Thermowell

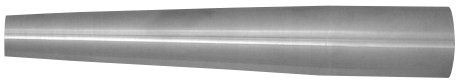

RoHS compliant

## Description & Features:

- Utilized where a welded thermowell is required
- 5 year warranty

## Applications:

- Where high pressure or high flow of media is present (i.e. pipes)

| Specifications | |
|---|---|
| **Material** | 304 or 316 SS |
| **Thermometer Connection** | 1/2” NPT |
| **Bore** | 0.260” (6.5mm) Standard |
| **Other** | 1.5” Connection pipe size standard |

## Order Codes

| Stem Length A | Pipe Diameter | Dimension P | Dimension U | Material | Code |
|---|---|---|---|---|---|
| 4” (100mm) | 3/4” | 1.5” (40mm) | 2.5” (63mm) | 304 SS | TWW154304 |
| | | | | 316 SS | TWW154316 |
| 6” (150mm) | | | 4.5” (115mm) | 304 SS | TWW156304 |
| | | | | 316 SS | TWW156316 |
| 9” (230mm) | | | 7.5” (191mm) | 304 SS | TWW159304 |
| | | | | 316 SS | TWW159316 |
| 12” (300mm) | | | 10.5” (267mm) | 304 SS | TWW1512304 |
| | | | | 316 SS | TWW1512316 |

Other configurations available. Cap and chain supplied as an option. Thermowells for 1” pipe available. 0.385” bores available.

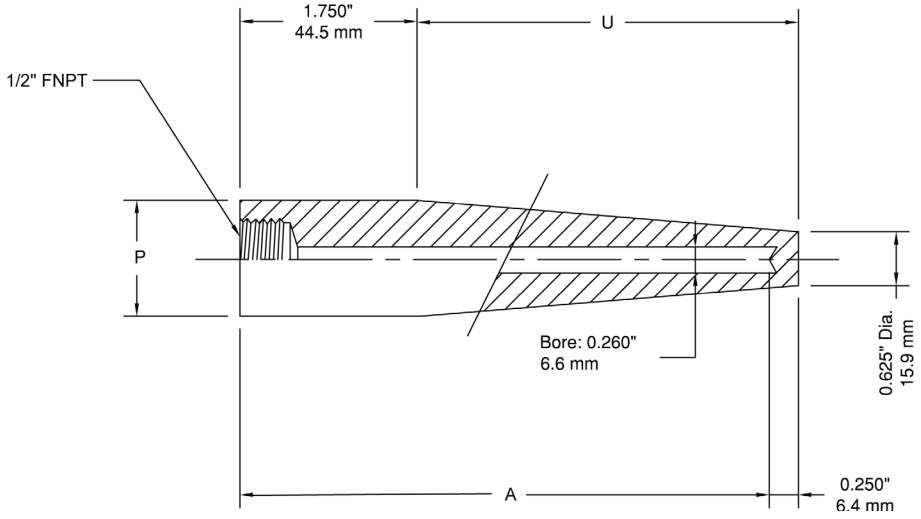

# FIR Isolation Ring Tees

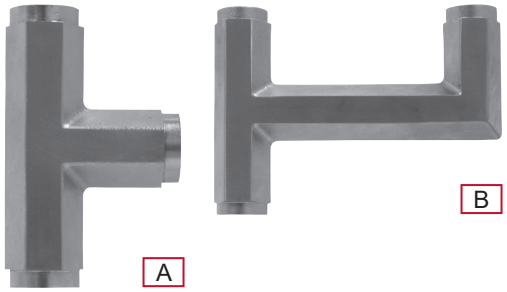





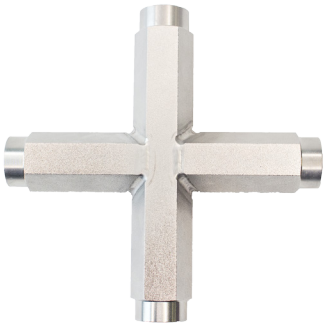


## Description & Features:

- Robust tees for isolation ring assembly
- 1-piece fully-welded construction
- 316 SS construction with 1/4” or 1/2” NPTF connections
- Ideal for installing pressure gauges, switches and transmitters for full functionality

## Applications:

- Water treatment facilities and other slurry environments where isolation rings are installed and more than one pressure instrument is required (eg. pressure gauge with pressure switch and/or transmitter)

## Order Codes

| Type | 1/4” | 1/2” |
|---|---|---|
| A | FIR0014 | FIR0010 |
| B | FIR0024 | FIR0020 |
| C | FIR0034 | **FIR0030** |
| D | FIR0044 | FIR0040 |

| Specifications | |
|---|---|
| **Material** | 316 SS |
| **Connections** | 2 or 3 instrument connections, 1 process connection |
| **Instrument Connections** | 1/4” or 1/2” NPTF |
| **Process Connection** | 1/2” NPTF |

## Type A

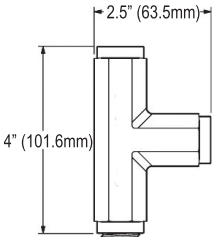


## Type B

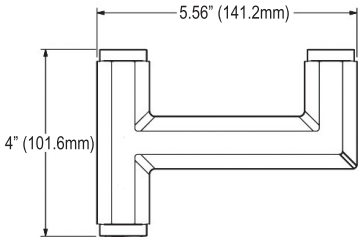


## Type C

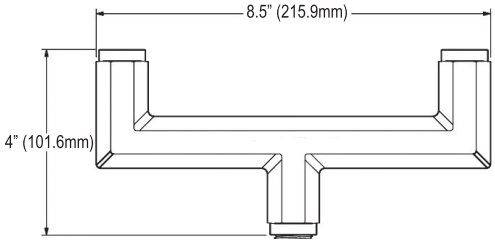


## Type D

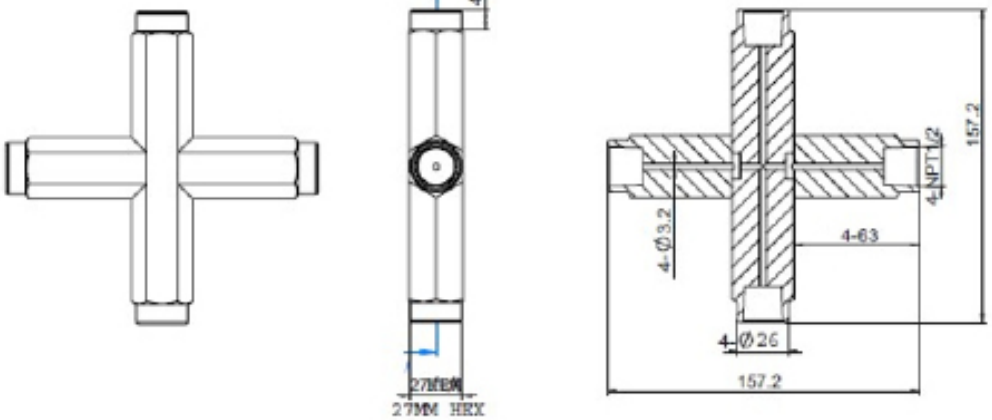

# SAS Adjustable Snubber



## Description & Features:

- Prolongs the life of pressure instruments by reducing the damaging effects of pulsation
- ASME B40.100 compliant
- CRN registered
- 5 year warranty

## Applications:

- Can be utilized to change the amount of restriction
- Pumps, compressors, hydraulic presses or fluid power applications

RoHS compliant

Note: RoHS only applies to SS adjustable snubber

| Specifications | |
|---|---|
| **Body** | Brass or SS |
| **Connection** | 1/4” or 1/2” NPTM x NPTF |
| **Temperature Range** | -40°F to 248°F (-40°C to 120°C) |
| **Warning (brass internals only)** | ⚠ **WARNING:** This product can expose you to chemicals including lead, which is known to the State of California to cause cancer and birth defects or other reproductive harm. For more information go to www.P65Warnings.ca.gov. |

## Order Codes

| Pressure Rating | Material / NPT Connection | Seal | Code |
|---|---|---|---|
| 6,000 psi | Brass 1/4” MxF | PTFE | SAS540 |
| | Brass 1/2” MxF | | SAS541 |
| | SS 1/4” MxF | | SAS542 |
| 10,000 psi | SS 1/2” MxF | | SAS543 |

| Description | SS | Brass |
|---|---|---|
| Gland Seal | PTFE | |
| Stem | 316 SS | |
| Gland | 316 SS | Brass |
| Gland Washer | 316 SS | |
| Body | 316 SS | Brass |

Caution: When adjusting the valve, do not adjust more than two turns from the closed position as leakage will occur.

### 1/4” NPT

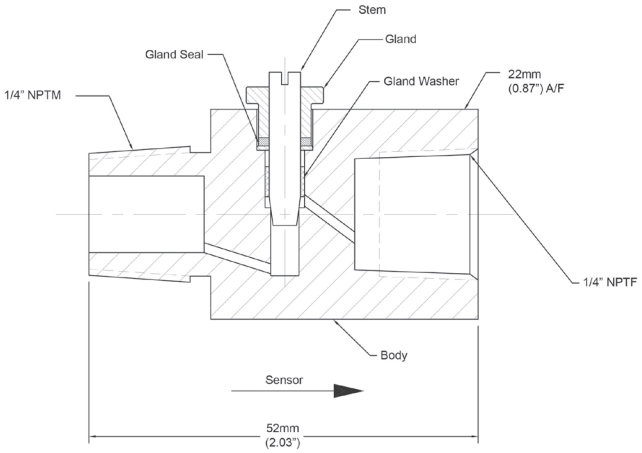


### 1/2” NPT

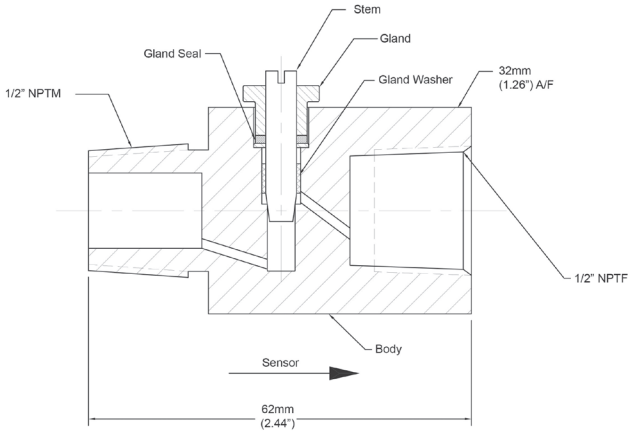

## Engineering Codes

| SAS SERIES | | S A S - | | - | | - | |
|---|---|---|---|---|---|---|---|
| **MATERIAL** | BRASS/BRONZE | | B R | | | | |
| | 316SS | | S S | | | | |
| | 316L | | S L | | | | |
| | 316/316L SS DUAL CERTIFIED | | D C | | | | |
| | DUPLEX STAINLESS STEEL | | D | | | | |
| | SUPER DUPLEX SS | | S D | | | | |
| | MONEL 400 | | M | | | | |
| | HASTELLOY C-276 | | H C | | | | |
| | INCONEL 825 | | I 8 | | | | |
| | INCONEL 625 | | I 7 | | | | |
| | INCONEL 600 | | I 6 | | | | |
| **INSTRUMENT CONNECTION** | 1/4" NPT MALE | | | N 4 | | | |
| | 3/8" NPT MALE | | | N 3 | | | |
| | 1/2" NPT MALE | | | N 2 | | | |
| | G 1/4" MALE | | | G 4 | | | |
| | G 3/8" MALE | | | G 3 | | | |
| | G 1/2" MALE | | | G 2 | | | |
| | 1/4" NPT FEMALE | | | F 4 | | | |
| | 3/8" NPT FEMALE | | | F 3 | | | |
| | 1/2" NPT FEMALE | | | F 2 | | | |
| | G 1/4" FEMALE | | | C 4 | | | |
| | G 1/2" FEMALE | | | C 2 | | | |
| | G 3/8" FEMALE | | | C 3 | | | |
| **PROCESS CONNECTION** | 1/4" NPT MALE | | | | N 4 | | |
| | 3/8" NPT MALE | | | | N 3 | | |
| | 1/2" NPT MALE | | | | N 2 | | |
| | G 1/4" MALE | | | | G 4 | | |
| | G 3/8" MALE | | | | G 3 | | |
| | G 1/2" MALE | | | | G 2 | | |
| | 1/4" NPT FEMALE | | | | F 4 | | |
| | 3/8" NPT FEMALE | | | | F 3 | | |
| | 1/2" NPT FEMALE | | | | F 2 | | |
| | G 1/4" FEMALE | | | | C 4 | | |
| | G 1/2" FEMALE | | | | C 2 | | |
| | G 3/8" FEMALE | | | | C 3 | | |
| **OPTIONS, LIST IN ALPHA-NUMERIC ORDER** | CRN REGISTERED | | | | | C | |
| | ROSH COMPLIANT | | | | | R | |
| | NACE COMPLIANT | | | | | N | |
| | SPECIAL | | | | | Z # # # | |

# SCT Cooling Tower

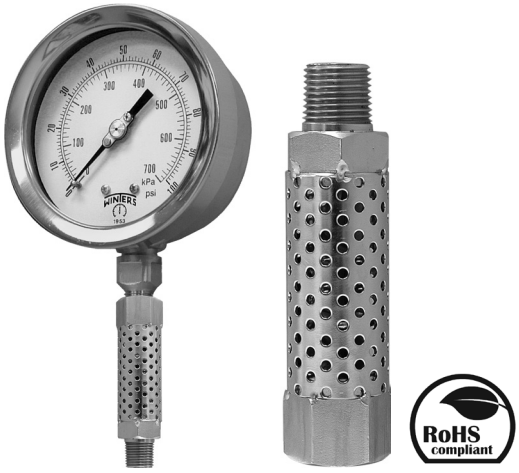

## Description & Features:

- Perforated case c/w spiral tubing protects pressure gauges, switches and transmitters. Used where the process media temperature exceeds the rating of the instrument
- For process media temperatures up to 570°F. Can reduce the media temperature by as much as 500°F*
- CRN registered
- 5 year warranty

## Applications:

- Clean (no particulate) media, gases
- When used with a diaphragm seal, the pressure rating of the diaphragm seal must be acknowledged
- Extreme high temperature installations
- Used in oil & gas installations, chemical processing and mining

Note: Pressure gauge sold separately

| Specifications | |
|---|---|
| **Socket** | 316 L SS |
| **Tube** | 316 SS |
| **Maximum Operating Pressure** | 1,500 psi |
| **Maximum Process Temperature** | 570°F (300°C) or 932°F (500°C) |
| **Connection** | 1/4” NPTM x 1/4” NPTF<br>1/2” NPTM x 1/2” NPTF |

## Order Codes (products in bold are normally stock in North America)

| Maximum Process Temperature | 1/4” NPTM x 1/4” NPTF | 1/2” NPTM x 1/2” NPTF |
|---|---|---|
| 570°F (300°C) | **SCT-400** | **SCT-500** |
| 932°F (500°C) | SCT-600 | SCT-700 |

Other connections available upon request

### SCT-400
### 1/4” NPTM x 1/4” NPTF

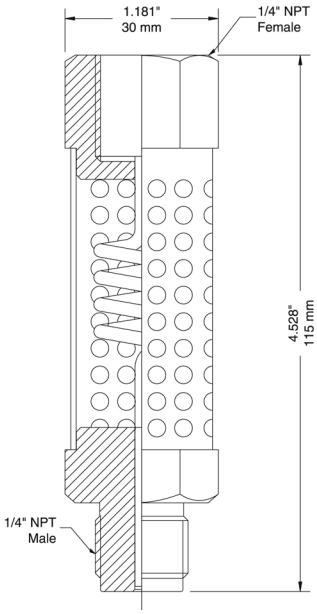


### SCT-500
### 1/2” NPTM x 1/2” NPTF

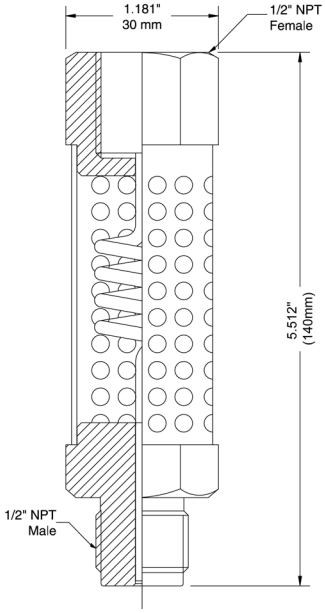


*Degree of cooling is dependent on ambient conditions

## Engineering Codes

| SCT SERIES | | S C T | - | | - | | | - | | | - | | | - | | | | |
|---|---|---|---|---|---|---|---|---|---|---|---|---|---|---|---|---|---|---|
| **MAXIMUM PROCESS TEMPERATURE** | 570°F (300°C) | | | 3 | | | | | | | | | | | | | | |
| | 932°F (500°C) | | | 5 | | | | | | | | | | | | | | |
| **PROCESS CONNECTION MATERIAL** | 316SS | | | | | S | S | | | | | | | | | | | |
| | 316LSS | | | | | S | L | | | | | | | | | | | |
| | 316/316L SS DUAL CERTIFIED | | | | | D | C | | | | | | | | | | | |
| | DUPLEX STAINLESS STEEL | | | | | D | | | | | | | | | | | | |
| | SUPER DUPLEX SS | | | | | S | D | | | | | | | | | | | |
| | MONEL 400 | | | | | M | | | | | | | | | | | | |
| | HASTELLOY C-276 | | | | | H | C | | | | | | | | | | | |
| | INCONEL 825 | | | | | I | 8 | | | | | | | | | | | |
| | INCONEL 625 | | | | | I | 7 | | | | | | | | | | | |
| | INCONEL 600 | | | | | I | 6 | | | | | | | | | | | |
| **TUBE MATERIAL** | 316SS | | | | | | | S | S | | | | | | | | | |
| | 316LSS | | | | | | | S | L | | | | | | | | | |
| | 316/316L SS DUAL CERTIFIED | | | | | | | D | C | | | | | | | | | |
| | DUPLEX STAINLESS STEEL | | | | | | | D | | | | | | | | | | |
| | SUPER DUPLEX SS | | | | | | | S | D | | | | | | | | | |
| | MONEL 400 | | | | | | | M | | | | | | | | | | |
| | HASTELLOY C-276 | | | | | | | H | C | | | | | | | | | |
| | INCONEL 825 | | | | | | | I | 8 | | | | | | | | | |
| | INCONEL 625 | | | | | | | I | 7 | | | | | | | | | |
| | INCONEL 600 | | | | | | | I | 6 | | | | | | | | | |
| **INSTRUMENT CONNECTION** | 1/4" NPT MALE | | | | | | | | | N | 4 | | | | | | | |
| | 3/8" NPT MALE | | | | | | | | | N | 3 | | | | | | | |
| | 1/2" NPT MALE | | | | | | | | | N | 2 | | | | | | | |
| | G 1/4" MALE | | | | | | | | | G | 4 | | | | | | | |
| | G 3/8" MALE | | | | | | | | | G | 3 | | | | | | | |
| | G 1/2" MALE | | | | | | | | | G | 2 | | | | | | | |
| | 1/4" NPT FEMALE | | | | | | | | | F | 4 | | | | | | | |
| | 3/8" NPT FEMALE | | | | | | | | | F | 3 | | | | | | | |
| | 1/2" NPT FEMALE | | | | | | | | | F | 2 | | | | | | | |
| | G 1/4" FEMALE | | | | | | | | | C | 4 | | | | | | | |
| | G 1/2" FEMALE | | | | | | | | | C | 2 | | | | | | | |
| | G 3/8" FEMALE | | | | | | | | | C | 3 | | | | | | | |
| **PROCESS CONNECTION** | 1/4" NPT MALE | | | | | | | | | | | N | 4 | | | | | |
| | 3/8" NPT MALE | | | | | | | | | | | N | 3 | | | | | |
| | 1/2" NPT MALE | | | | | | | | | | | N | 2 | | | | | |
| | G 1/4" MALE | | | | | | | | | | | G | 4 | | | | | |
| | G 3/8" MALE | | | | | | | | | | | G | 3 | | | | | |
| | G 1/2" MALE | | | | | | | | | | | G | 2 | | | | | |
| | 1/4" NPT FEMALE | | | | | | | | | | | F | 4 | | | | | |
| | 3/8" NPT FEMALE | | | | | | | | | | | F | 3 | | | | | |
| | 1/2" NPT FEMALE | | | | | | | | | | | F | 2 | | | | | |
| | G 1/4" FEMALE | | | | | | | | | | | C | 4 | | | | | |
| | G 1/2" FEMALE | | | | | | | | | | | C | 2 | | | | | |
| | G 3/8" FEMALE | | | | | | | | | | | C | 3 | | | | | |
| **OPTIONS, LIST IN ALPHA-NUMERIC ORDER** | CRN REGISTERED | | | | | | | | | | | | | | | | C | |
| | ROSH COMPLIANT | | | | | | | | | | | | | | | | R | |
| | NACE COMPLIANT | | | | | | | | | | | | | | | | N | |
| | SPECIAL | | | | | | | | | | | | | | | | Z | # # # |

# SOP Over Pressure Protector

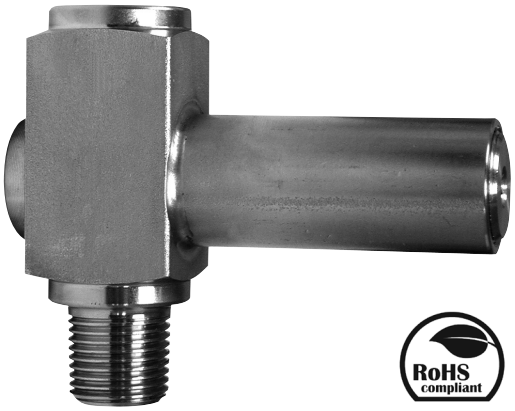

## Description & Features:

- Setpoint adjustments are made by manipulating an external adjusting screw and lock nut
- Automatically shuts off pressure to the instrument once the adjustable preset pressure is exceeded
- CRN registered
- 5 year warranty

## Applications:

- Utilized to protect pressure instruments against surges and pulsation
- Available in Bellows and Piston Type

| Specifications | |
|---|---|
| **Body** | Bellows Type: 316 SS<br>Piston Type: 316 SS |
| **Gasket** | FKM |
| **Maximum Operating Pressure** | 10,000 psi |
| **Temperature Rating** | -40°F to 248°F (-40°C to 120°C) |
| **Connection** | 1/4” NPTM x 1/4” NPTF or 1/2” NPTM x 1/2” NPTF |

## Order Codes

| Bellows Type | | | | |
|---|---|---|---|---|
| **Adjustable Pressure Range** | **Connection NPT** | | | |
| | **1/4” x 1/4”** | **1/2” x 1/2”** | **1/4” x 1/4” NACE** | **1/2” X 1/2” NACE** |
| 2.9 to 14.5 psi | SOP32025 | SOP32050 | SOP32025N | SOP32050N |
| 14.5 to 58 psi | SOP159025 | SOP159050 | SOP159025N | SOP159050N |
| 58 to 145 psi | SOP9023025 | SOP9023050 | SOP9023025N | SOP9023050N |
| **Piston Type** | | | | |
| **Adjustable Pressure Range** | **Connection NPT** | | | |
| | **1/4” x 1/4”** | **1/2” x 1/2”** | **1/4” x 1/4” NACE** | **1/2” x 1/2” NACE** |
| 145 to 580 psi | SOP14039525 | SOP14039550 | SOP14039525N | SOP14039550N |
| 580 to 2,330 psi | SOP435116025 | **SOP435116050** | SOP435116025N | SOP435116050N |
| 2,320 to 5,800 psi | SOP1450580025 | SOP1450580050 | SOP1450580025N | SOP1450580050N |

### 1/4” x 1/4”

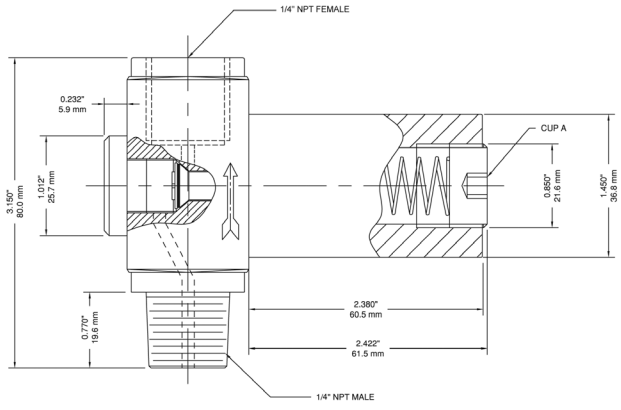


### 1/2” x 1/2”

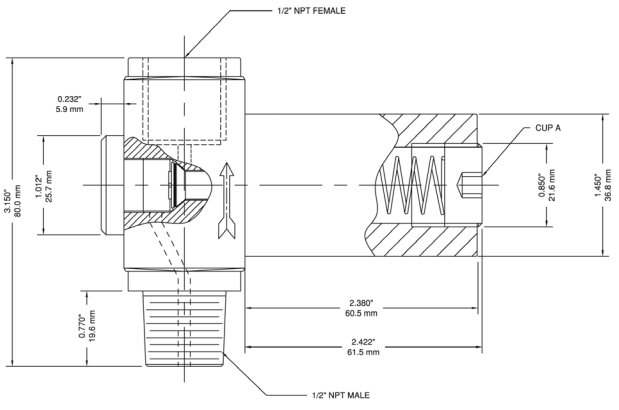

# SOP Over Pressure Protector

## Engineering Codes

| SOP SERIES | | S O P - □ - □□ - □□ - □□ - □□□□ |
|---|---|---|
| **TYPE** | BELLOW (<145psi/10Bar) | B |
| | PISTON (>145psi/10Bar) | P |
| **MATERIAL** | BRASS/BRONZE | B R |
| | 316SS | S S |
| | 316L | S L |
| | 316/316L SS DUAL CERTIFIED | D C |
| | DUPLEX STAINLESS STEEL | D |
| | SUPER DUPLEX SS | S D |
| | MONEL 400 | M |
| | HASTELLOY C-276 | H C |
| | INCONEL 825 | I 8 |
| | INCONEL 625 | I 7 |
| | INCONEL 600 | I 6 |
| **INSTRUMENT CONNECTION** | 1/4" NPT MALE | N 4 |
| | 3/8" NPT MALE | N 3 |
| | 1/2" NPT MALE | N 2 |
| | G 1/4" MALE | G 4 |
| | G 3/8" MALE | G 3 |
| | G 1/2" MALE | G 2 |
| | 1/4" NPT FEMALE | F 4 |
| | 3/8" NPT FEMALE | F 3 |
| | 1/2" NPT FEMALE | F 2 |
| | G 1/4" FEMALE | C 4 |
| | G 1/2" FEMALE | C 2 |
| | G 3/8" FEMALE | C 3 |
| **PROCESS CONNECTION** | 1/4" NPT MALE | N 4 |
| | 3/8" NPT MALE | N 3 |
| | 1/2" NPT MALE | N 2 |
| | G 1/4" MALE | G 4 |
| | G 3/8" MALE | G 3 |
| | G 1/2" MALE | G 2 |
| | 1/4" NPT FEMALE | F 4 |
| | 3/8" NPT FEMALE | F 3 |
| | 1/2" NPT FEMALE | F 2 |
| | G 1/4" FEMALE | C 4 |
| | G 1/2" FEMALE | C 2 |
| | G 3/8" FEMALE | C 3 |
| **OPTIONS, LIST IN ALPHA-NUMERIC ORDER** | CRN REGISTERED | C |
| | ROSH COMPLIANT | R |
| | NACE COMPLIANT | N |
| | SPECIAL | Z # # # |

# SSN, SSN-LF Snubber, Lead Free Snubber

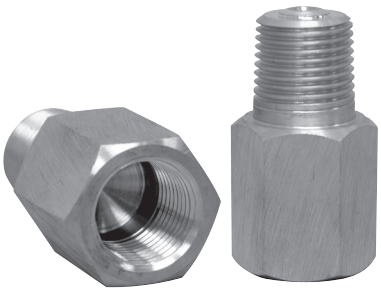

## Description & Features:

- Incorporates a sintered, porous 316 stainless steel snubbing element with a large surface area to ensure long term effectiveness
- Available in the three standard viscosity classifications of heavy oil, water and air
- Brass, lead free brass or stainless steel housings can be specified depending upon pressure media and operating pressure
- ASME B40.100 compliant
- CRN registered
- 5 year warranty

## Applications:

- To significantly lessen the damaging effects of pulsation on gauges, transducers, transmitters, manometers and pressure switches
- Lead free version for potable water systems

LEAD FREE

RoHS compliant

Note: RoHS applies only to 316 SS version

| Specifications | SS | Brass |
|---|---|---|
| Operating Temperature | -320°F to 1,500°F (-195°C to 815°C) | -65°F to 650°F (-53°C to 343°C) |
| Operating Pressure | Maximum 20,000 psi (137,900 kPa) | Maximum 10,000 psi (68,950 kPa) |
| Burst Pressure | 60,000 psi (413,700 kPa) | 30,000 psi (206,850 kPa) |
| Housing | 316 SS | SSN: Brass<br>SSN-LF: Lead free brass |
| Snubbing Element | Sintered, porous type 316 SS | Sintered, porous type 316 SS |
| Retainer | 300 series SS | 300 series SS |
| Warning (brass internals only) | N/A | **WARNING:** This product can expose you to chemicals including lead, which is known to the State of California to cause cancer and birth defects or other reproductive harm. For more information go to www.P65Warnings.ca.gov. |

## SSN Order Codes (products in bold are normally stock in North America)

| Model | Heavy Oil | Water | Air |
|---|---|---|---|
| 1/4" Brass | **SSN517** | **SSN515** | **SSN516** |
| 1/4" SS | **SSN520** | **SSN518** | **SSN519** |
| 1/2" Brass | SSN514 | SSN512 | SSN513 |
| 1/2" SS | **SSN531** | **SSN529** | SSN530 |

## SSN-LF Order Codes (products in bold are normally stock in North America)

| Model | Water |
|---|---|
| 1/4" Brass | **SSN515LF** |
| 1/2" Brass | **SSN512LF** |

### 1/4" Snubber

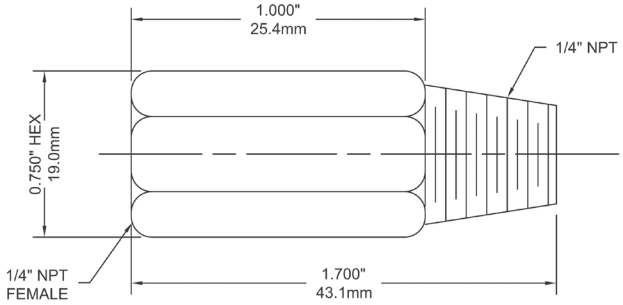


### 1/2" Snubber

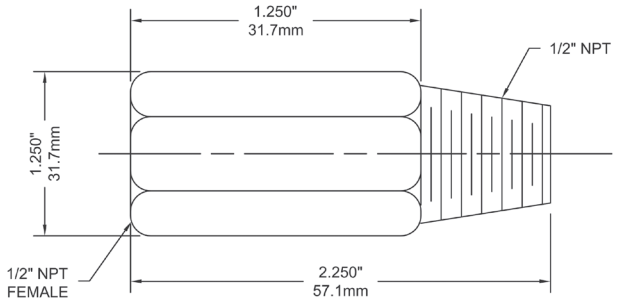

## Engineering Codes

| SSN SERIES | | S S N - | - | - | - |
|---|---|---|---|---|---|
| **MATERIAL** | BRASS/BRONZE | B R | | | |
| | 316SS | S S | | | |
| | 316L | S L | | | |
| | 316/316L SS DUAL CERTIFIED | D C | | | |
| | DUPLEX STAINLESS STEEL | D | | | |
| | SUPER DUPLEX SS | S D | | | |
| | MONEL 400 | M | | | |
| | HASTELLOY C-276 | H C | | | |
| | INCONEL 825 | I 8 | | | |
| | INCONEL 625 | I 7 | | | |
| | INCONEL 600 | I 6 | | | |
| **INSTRUMENT CONNECTION** | 1/4" NPT MALE | | N 4 | | |
| | 3/8" NPT MALE | | N 3 | | |
| | 1/2" NPT MALE | | N 2 | | |
| | G 1/4" MALE | | G 4 | | |
| | G 3/8" MALE | | G 3 | | |
| | G 1/2" MALE | | G 2 | | |
| | 1/4" NPT FEMALE | | F 4 | | |
| | 3/8" NPT FEMALE | | F 3 | | |
| | 1/2" NPT FEMALE | | F 2 | | |
| | G 1/4" FEMALE | | C 4 | | |
| | G 1/2" FEMALE | | C 2 | | |
| | G 3/8" FEMALE | | C 3 | | |
| **PROCESS CONNECTION** | 1/4" NPT MALE | | | N 4 | |
| | 3/8" NPT MALE | | | N 3 | |
| | 1/2" NPT MALE | | | N 2 | |
| | G 1/4" MALE | | | G 4 | |
| | G 3/8" MALE | | | G 3 | |
| | G 1/2" MALE | | | G 2 | |
| | 1/4" NPT FEMALE | | | F 4 | |
| | 3/8" NPT FEMALE | | | F 3 | |
| | 1/2" NPT FEMALE | | | F 2 | |
| | G 1/4" FEMALE | | | C 4 | |
| | G 1/2" FEMALE | | | C 2 | |
| | G 3/8" FEMALE | | | C 3 | |
| **OPTIONS, LIST IN ALPHA-NUMERIC ORDER** | CRN REGISTERED | | | | C |
| | ROSH COMPLIANT | | | | R |
| | NACE COMPLIANT | | | | N |
| | SPECIAL | | | | Z # # # |

# SSP Syphon



RoHS compliant

Note: RoHS applies only to 304 SS and 316 SS syphons

## Description & Features:

- On steam service, the syphon will prevent hot steam from entering a pressure gauge, diaphragm seal or transmitter
- Available in brass/steel for non-corrosive applications and stainless steel for corrosive applications
- CRN registered
- 5 year warranty

## Applications:

- Recommended for applications involving temperatures above 100°F (37°C)
- Ideal for steam installations

| Specifications | |
|---|---|
| **Material** | Schedule 40 brass, schedule 40, 80 carbon steel, 304 SS or 316 SS (all types seamless) |
| **Style** | 180° coil |
| **Connection** | 1/4” NPTM x 1/4” NPTM or 1/2” NPTM x 1/2” NPTM |
| **Maximum Operating Pressure** | Schedule 40: Brass, carbon steel, 304 SS, 316 SS suitable up to 500 psi at 680°F (360°C)<br>Schedule 80: Carbon steel, 304 SS, 316 SS suitable up to 1,650 psi at 630°F (332°C) |
| **Warning (brass syphons only)** | **WARNING:** This product can expose you to chemicals including lead, which is known to the State of California to cause cancer and birth defects or other reproductive harm. For more information go to www.P65Warnings.ca.gov. |

## Order Codes (products in bold are normally stock in North America)

| Material | 1/4” NPT | 1/2” NPT |
|---|---|---|
| Schedule 40 Brass | **SSP545** | SSP559 |
| Schedule 40 Carbon Steel | **SSP525** | **SSP555** |
| Schedule 40 304 SS | **SSP535** | **SSP585** |
| Schedule 40 316 SS | **SSP554** | **SSP557** |
| Schedule 80 Carbon Steel | **SSP556** | **SSP2715** |
| Schedule 80 304 SS | SSP595 | SSP2716 |
| Schedule 80 316 SS | - | SSP2719 |

Note: Schedule 80 316 SS and extra-extra strong schedule available

### 1/4” Syphon

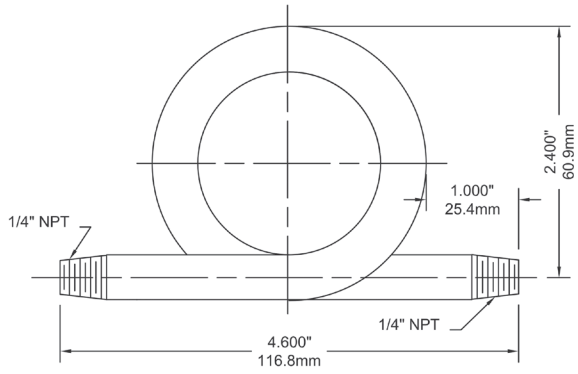


### 1/2” Syphon

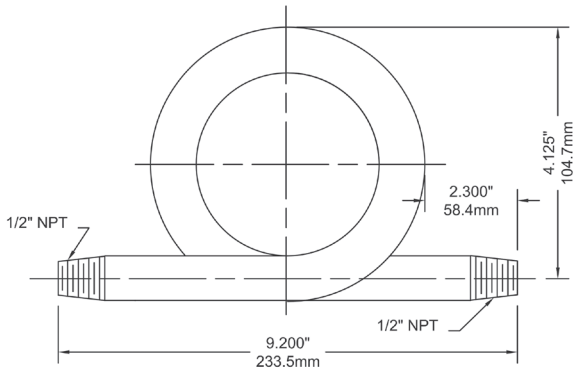

## Engineering Codes

| SSP SERIES | | SSP - □ - □□□ - □□ - □□ - □□ - □□□□ |
|---|---|---|
| **SYPHON TYPE** | 90 deg, L-Type | L |
| | 180 deg, O-Type (PIG TAIL) | P |
| | 270 deg, U-Type | U |
| **PIPE SCHEDULE** | SCHEDULE 40 | 40 |
| | SCHEDULE 80 | 80 |
| | SCHEDULE 160 | 160 |
| **MATERIAL** | BRASS/BRONZE | BR |
| | CARBON STEEL | CS |
| | 304SS | SS |
| | 316SS | SS |
| | 316LSS | SL |
| **INSTRUMENT CONNECTION** | 1/4" NPT MALE | N4 |
| | 3/8" NPT MALE | N3 |
| | 1/2" NPT MALE | N2 |
| | G 1/4" MALE | G4 |
| | G 3/8" MALE | G3 |
| | G 1/2" MALE | G2 |
| | 1/4" NPT FEMALE | F4 |
| | 3/8" NPT FEMALE | F3 |
| | 1/2" NPT FEMALE | F2 |
| | G 1/4" FEMALE | C4 |
| | G 1/2" FEMALE | C2 |
| | G 3/8" FEMALE | C3 |
| **PROCESS CONNECTION** | 1/4" NPT MALE | N4 |
| | 3/8" NPT MALE | N3 |
| | 1/2" NPT MALE | N2 |
| | G 1/4" MALE | G4 |
| | G 3/8" MALE | G3 |
| | G 1/2" MALE | G2 |
| | 1/4" NPT FEMALE | F4 |
| | 3/8" NPT FEMALE | F3 |
| | 1/2" NPT FEMALE | F2 |
| | G 1/4" FEMALE | C4 |
| | G 1/2" FEMALE | C2 |
| | G 3/8" FEMALE | C3 |
| **OPTIONS, LIST IN ALPHA-NUMERIC ORDER** | CRN REGISTERED | C |
| | ROSH COMPLIANT | R |
| | NACE COMPLIANT | N |
| | SPECIAL | Z### |

# STP, STP-LF Test Plug, Lead Free Test Plug

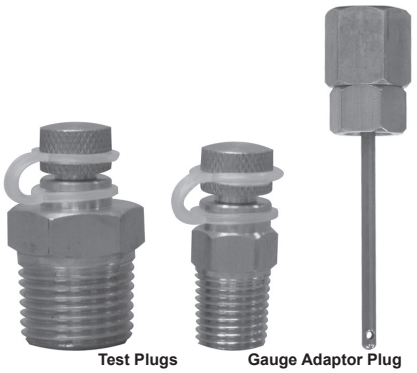


## Description & Features:

- Facilitates quick pressure and temperature readings at recommended test points within process
- Test plugs are available in brass or lead free brass wetted parts
- Gauge adapters ship with protective aluminum sleeve
- ASME B1.20.1 compliant
- CRN registered
- 5 year warranty

## Applications:

- Mainly used in plumbing, heating, ventilation and air conditioning installations
- Lead free version for potable water systems

| Specifications | |
|---|---|
| **Body** | STP: Brass<br>STP-LF: Lead free brass |
| **Diaphragm/Core** | NBR (Buna N) |
| **Temperature Rating** | -40°F to 302°F (-40°C to 150°C) |
| **Maximum Pressure Rating** | 1,000 psi (6,895 kPa) |
| **Connection** | 1/4" NPT or 1/2" NPT |
| **Warning** | ⚠ **WARNING:** This product can expose you to chemicals including lead, which is known to the State of California to cause cancer and birth defects or other reproductive harm. For more information go to www.P65Warnings.ca.gov. |

## STP Order Codes (products in bold are normally stock in North America)

| Brass Test Plug | |
|---|---|
| 1/4" NPTM | **STP001** |
| 1/2" NPTM | **STP002** |

| Gauge Adaptor | |
|---|---|
| 2.75 OAL x 1.75" x 0.125" probe | **STP003** |
| 2.25 OAL x 1.75" x 0.125" probe | STP004 |

## STP-LF Order Codes (products in bold are normally stock in North America)

| Lead Free Brass Test Plug | |
|---|---|
| 1/4" NPTM | **STP001LF** |
| 1/2" NPTM | **STP002LF** |

Other sizes and materials available upon request.

### 1/4" Test Plug

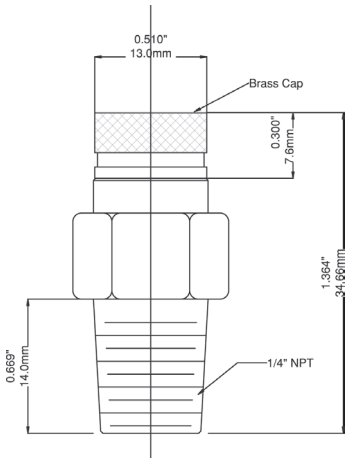


### 1/2" Test Plug

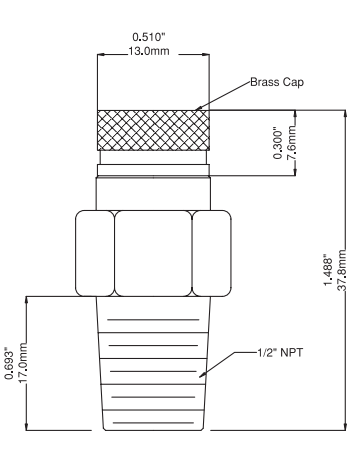


### Gauge Adaptor 2.25"

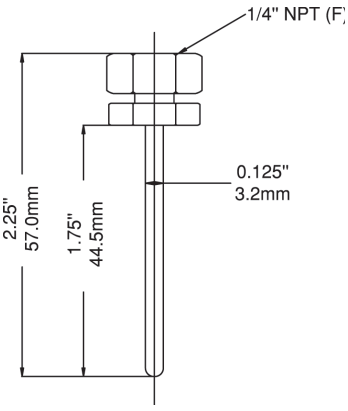


### Gauge Adaptor 2.75"

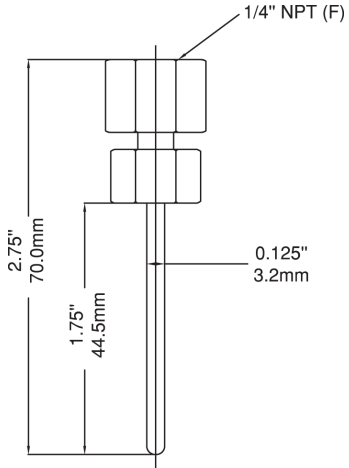

# Diaphragm Seals Selection Guide

**Process Media and Material Compatibility:** Since the wetted parts of the diaphragm seal assembly, which consist of the lower housing and diaphragm element itself, as well as any gaskets, will come in contact with the process, it is imperative to ensure the proper material is selected. The material selected must be compatible with all the various chemicals the seal may come in contact with while in service.

**Temperature (Process & Ambient):** Each diaphragm seal assembly is filled with an amount of fill fluid at ambient temperature. The increase of process or media temperature can cause the fill fluid to expand, creating a larger volume and pressure build up in the assembly.

**Pressure Instrument:** The diaphragm seal chosen must have the ability to provide enough volumetric displacement to drive the instrument through it's full range. A rule of thumb is as follows: The lower the pressure, the more displacement is needed. The larger the gauge, the more displacement is needed. The smaller the diaphragm, the less displacement it can provide.

**Process Connection and Orientation:** The most common connections for diaphragm seals are threaded from 1/4" to 1" NPT and flanged. Be sure to specify both the flange size and rating when selecting a flanged seal.

**Pressure Range:** As stated above the diaphragm selected must be able to handle the pressure range to be sensed. The lower the pressure, the larger the diaphragm element must be to ensure sensitivity and proper displacement.

**Response Time:** Response time to sudden changes in process pressure can be effected by many things, such as size of the diaphragm, viscosity of the fill fluid, ambient and process temperatures and the use of capillary for remote mounted gauges.

**Fill Fluid:** Fill fluid selection is critical to the performance of the diaphragm seal assembly. Process and ambient temperatures, pressure and compatibility with the process media must be considered. Inert fills such as Halocarbon®, Fluorolube® and Krytox® must be specified when oxidizers are present.

| | Series | Instrument Connection | | | Process Connection | | | | | | | Wetted Parts Material | | | | | | | | | Pressure Range | | | | | | | | |
|---|---|---|---|---|---|---|---|---|---|---|---|---|---|---|---|---|---|---|---|---|---|---|---|---|---|---|---|---|
| Catalogue Page | | 1/4" NPT | 1/2" NPT | 1/2" NPT Male | 1/4" NPT | 1/2" NPT | 3/4" NPT | ≥1" NPT | Tri-Clamp® | RF Flange | Wafer Flange | Buna | Hastelloy® C | Monel® | PVC | Stainless Steel | Tantalum | PTFE | FKM | Other | Vac - 200 psi | 30-600 psi | Vac - 1,000 psi | 30-1,000 psi | 30-1,300 psi | 30-2,500 psi | 50-5,800 psi | 1,000-6,000 psi | RoHS compliant |
| 160 | D10 PVC 2-Piece Seal | x | | | x | x | | | | | | | | | x | | | x | | | x | | | | | | | | |
| 161 | D15 Threaded Flush Mount Seal | x | | | | | x | | | | | | | | | x | | | | | | | | | | | x | x | x |
| 162 | D20 Sanitary Seal | x | | | | | | | x | | | | | | | x | | | | | | x | | | | | | | x |
| 163 | D30 High Pressure Seal | x | | | x | | | | | | | | | | | x | | | | | | | | | | | | x | x |
| 164 | D40 Medium Duty Seal | x | x | | x | x | | | | | | | | | | x | | | | | | | | x | | | | | x |
| 165 | D44 Flanged Seal (PTFE) | x | x | | | | | | | x | | | | | | | | x | | | | | x | | | | | | |
| 167 | D44 Flanged Seal All Welded | x | x | | | | | | | x | | | x | x | x | x | x | x | x | x | | | | | | x | | | |
| 169 | D46 Flanged Flush Mount Seal | x | x | | | | | | | x | | | | | | x | | | | | | | | | x | | | | |
| 170 | D70 Heavy Duty 2-Piece Industrial Seal | x | x | | x | x | x | x | | | | x | x | x | | x | | x | x | | | | | | | x | | | x |
| 172 | D71 NACE 2-Piece Seals | x | x | | x | x | | x | | | | x | x | | | | | x | x | | | | | | | x | | | |
| 174 | D81 Isolation Ring | x | x | x | | | | x | | | x | x | x | | x | x | | x | x | x | | | x | | | | | | |
| 176 | D85 In Line Flow Thru Seal | x | x | | x | x | x | x | | | | | | | | x | | | | | | x | | | | | | | |
| 177 | D90 Saddle Weld Seal | x | x | | | | | x | | | | | x | x | | x | x | x | x | x | | x | | | | | | | |

Hastelloy® is a registered trademark of Haynes International, Inc.
Fluorolube® is a registered trademark of Gabriel Performance Products, LLC.
Halocarbon® is a registered trademark of Halocarbon Products Corporation
Krytox® is a registered trademark of DuPont Corporation
Monel® is a registered trademark of Inco Alloys International
Tri-Clamp® is a registered trademark of Tri-Clover

**Note: When selecting a diaphragm seal, always refer to ASME B40.100 (2013)**

# D10 PVC 2-Piece Seal

*Vacuum to 200 psi (-100 to 1,380 kPa)*



## Description & Features:

- Features a durable and flexible PTFE diaphragm seal, which serves as a protective barrier between the process fluid and instrument
- High accuracy and dependability
- ASME B40.100 compliant
- 5 year warranty

## Applications:

- Provides an economical solution to protect instruments from corrosion and clogging
- Used to isolate and protect a pressure instrument on ultra-pure or highly corrosive fluid lines
- Can be used with liquids such as demineralized water, sulphuric acid, hydrochloric acid and caustic gases (such as corrosive air and ammonia), where such fluids will corrode metal instruments
- Review of chemical compatibility is available upon request

| Specifications | |
|---|---|
| **Housing** | PVC (Polyvinyl Chloride, Type 1, Grade 1) |
| **Diaphragm** | PTFE |
| **Minimum Operating Pressure** | Vacuum |
| **Maximum Operating Pressure** | 200 psi (1,380 kPa) |
| **Gauge Connection** | 1/4” NPTF |
| **Process Connection** | 1/4”, 1/2” NPTF |
| **Process Temperature** | 77°F to 104°F (25°C to 40°C) |

## Order Codes (products in bold are normally stock in North America)

| 1/4” NPTF x 1/4” NPTF | 1/4” NPTF x 1/2” NPTF |
|---|---|
| **D10985** | **D10986** |

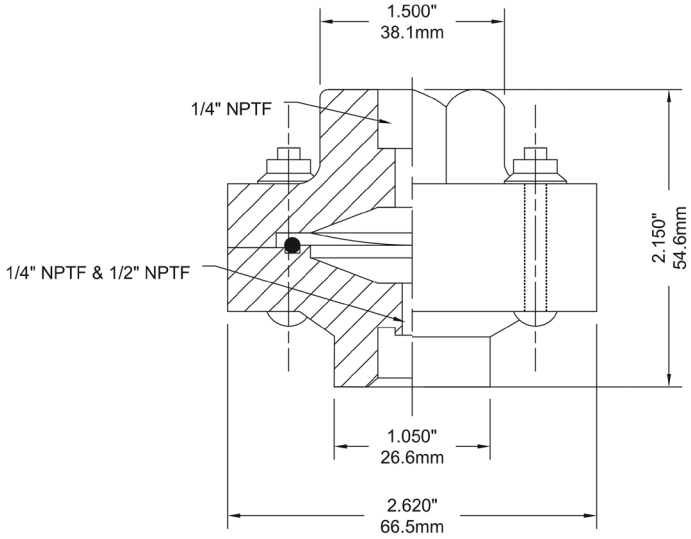

# D15 Threaded Flush Mount Seal

*50 to 5,800 psi (345 to 40,000 kPa)*



RoHS compliant

## Description & Features:

- Constructed with a welded diaphragm placed at the end of the male NPT connection, eliminating the normal diaphragm chamber where solidification of the process media may render the seal inoperable
- Rugged and suitable for the most severe process applications
- ASME B40.100 compliant
- CRN registered
- 5 year warranty

## Applications:

- Suitable for any process where freezing or solidification of the pressure media is a concern

| Specifications | |
|---|---|
| **Housing** | AISI 316 SS |
| **Diaphragm** | AISI 316L SS, welded |
| **Minimum Operating Pressure** | 50 psi (345 kPa) |
| **Maximum Operating Pressure** | 5,800 psi (40,000 kPa) |
| **Gauge Connection** | 1/4" NPTF |
| **Process Connection** | 3/4" NPTM |
| **Process Temperature** | -20°F to 360°F (-29°C to 182°C) |

## Order Codes

| 1/4" NPTF x 3/4" NPTM |
|---|
| D15992 |

**Option suffix for above order code only:**
SF-D = Silicone fill (seal only)

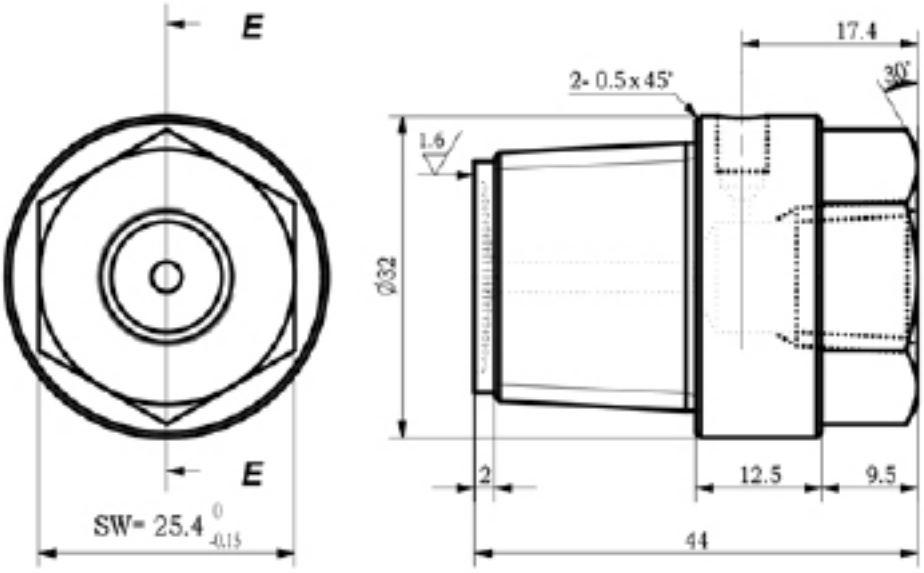

# D20 Sanitary Seal

*30 to 600 psi (200 to 4,140 kPa)*



## Description & Features:

- Meets the requirements of dairy, food, beverage, chemical and pharmaceutical industries
- 3A approved
- ASME B40.100 compliant
- CRN registered
- 5 year warranty

## Applications:

- D20 may be attached to any Winters all SS gauge for sanitary installations.

| Specifications | |
|---|---|
| **Housing** | AISI 316 SS |
| **Diaphragm** | AISI 316L SS, welded |
| **Minimum Operating Pressure** | 30 psi (200 kPa) |
| **Maximum Operating Pressure** | 600 psi (4,140 kPa) |
| **Gauge Connection** | 1/4" NPTF |
| **Process Connection** | 1.5" (40mm) and 2" (50mm) Tri-Clamp® fitting standard |
| **Process Temperature** | -4°F to 248°F (-20°C to 120°C) |
| **Surface Finish** | 8 Ra = 1.5" and 2", 1.6 Ra = 3" |

## Order Codes

| 1.5" (40mm) | 2" (50mm) | 3" (90mm) |
|---|---|---|
| D20980 | D20976 | D20970 |

**Option suffix for above order codes only:**
SF-D = Silicone fill (seal only)

### 1.5" Tri-Clamp®

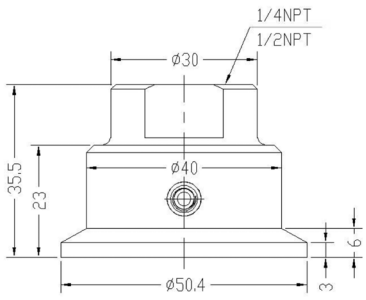


### 2" Tri-Clamp®

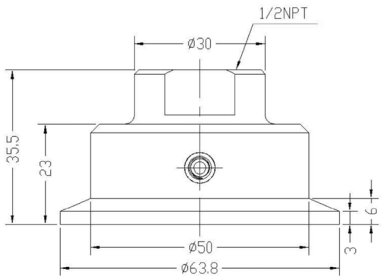


### 3" Tri-Clamp®

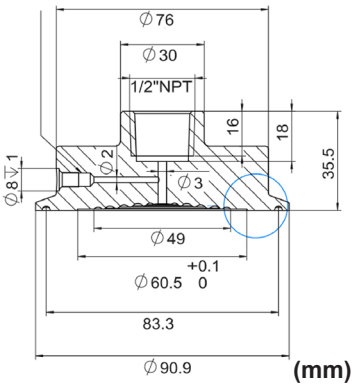


(mm)

Tri-Clamp® is a registered trademark of Tri-Clover

# High Pressure Seal D30

*1,000 to 6,000 psi (6,900 to 41,300 kPa)*




## Description & Features:

- Compact, lightweight and economical
- Constructed of AISI 316 stainless steel and is welded together into a one piece unit
- ASME B40.100 compliant
- CRN registered
- 5 year warranty

## Applications:

- Offers protection for pressure instruments (gauges and transmitters) from corrosive, contaminated or viscous media
- Ideally suited for applications where space limitations exist

| Specifications | |
|---|---|
| **Housing** | AISI 316 SS |
| **Diaphragm** | AISI 316L SS, welded |
| **Minimum Operating Pressure** | 1,000 psi (6,900 kPa) |
| **Maximum Operating Pressure** | 6,000 psi (41,300 kPa) |
| **Gauge Connection** | 1/4” NPTF |
| **Process Connection** | 1/4” NPTF or NPTM |
| **Process Temperature** | -49°F to 302°F (-45°C to 150°C) |

## Order Codes

| 1/4” NPTF x 1/4” NPTF | 1/4” NPTF x 1/4” NPTM |
|---|---|
| D30975 | D30976 |

**Option suffix for above order codes only:**
SF-D = Silicone fill (seal only)

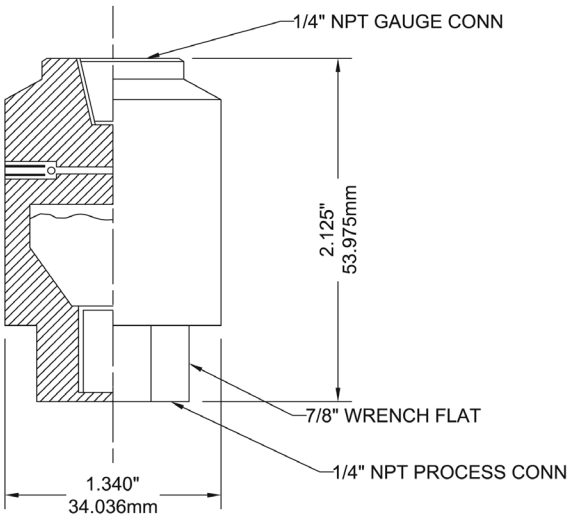


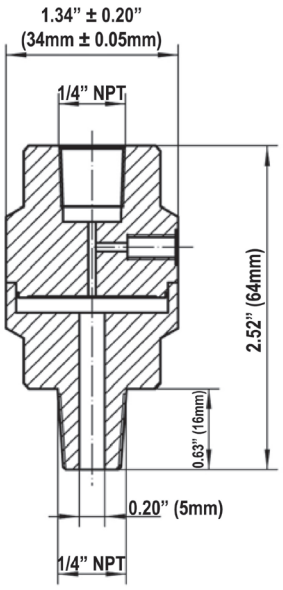

# D40 Medium Duty Seal

*30 to 1,000 psi (200 to 6,900 kPa)*



RoHS compliant

## Description & Features:

- Compact (one piece), lightweight and economical
- ASME B40.100 compliant
- CRN registered
- 5 year warranty

## Applications:

- Ideally suited for applications where space limitations exist
- Primarily utilized to protect gauges and transmitters from corrosive media
- Utilized in many OEM applications

| Specifications | |
|---|---|
| **Housing** | AISI 316 SS |
| **Diaphragm** | AISI 316L SS, welded |
| **Minimum Operating Pressure** | 30 psi (200 kPa) |
| **Maximum Operating Pressure** | 1,000 psi (6,900 kPa) |
| **Gauge Connection** | 1/4", 1/2" NPTF |
| **Process Connection** | 1/4", 1/2" NPTF or NPTM |
| **Process Temperature** | -49°F to 302°F (-45°C to 150°C) |

## Order Codes (products in bold are normally stock in North America)

| Connection | 1/4" x 1/4" NPT | 1/4" x 1/2" NPT | 1/2" x 1/2" NPT |
|---|---|---|---|
| F x F | **D40973** | **D40972** | **D40974** |
| F x M | D40975 | D40976 | D40977 |

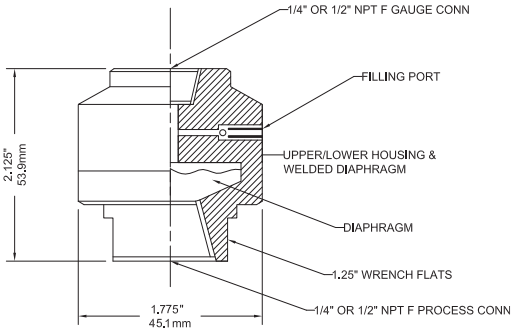


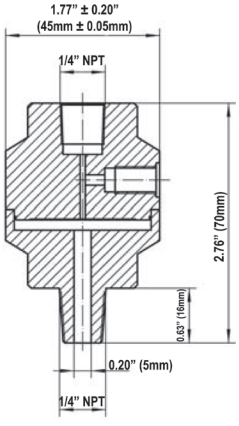


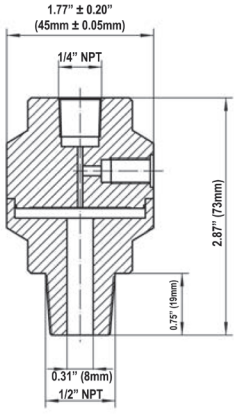


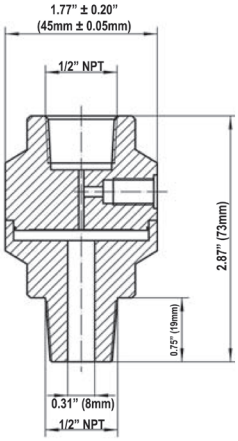

# D40 Medium Duty Seal

## Engineering Codes

| D40 SERIES, 1-pc | | D 4 0 - | - | - | - | - | - |
|---|---|---|---|---|---|---|---|
| **INSTRUMENT CONNECTION** | 1/4" NPT FEMALE | F 4 | | | | | |
| | 3/8" NPT FEMALE | F 3 | | | | | |
| | 1/2" NPT FEMALE | F 2 | | | | | |
| | G 1/4" FEMALE | C 4 | | | | | |
| | G 1/2" FEMALE | C 2 | | | | | |
| **PROCESS CONNECTION** | 1/2" | | 0 5 | | | | |
| | 3/4" | | 0 7 | | | | |
| | 1" | | 1 0 | | | | |
| | 1.5" | | 1 5 | | | | |
| | 2" | | 2 0 | | | | |
| | 2.5" | | 2 1 | | | | |
| | 3" | | 3 0 | | | | |
| | DN 15 | | D 1 5 | | | | |
| | DN 20 | | D 2 0 | | | | |
| | DN 25 | | D 2 5 | | | | |
| | DN 40 | | D 4 0 | | | | |
| | DN 50 | | D 5 0 | | | | |
| **HOUSING MATERIAL** | 304SS | | | S | | | |
| | 316SS | | | S S | | | |
| | 316L | | | S L | | | |
| | 316/316L SS DUAL CERTIFIED | | | D C | | | |
| | DUPLEX | | | D | | | |
| | SUPER DUPLEX | | | S D | | | |
| | MONEL 400 | | | M | | | |
| | HASTELLOY C-276 | | | H C | | | |
| | TATANIUM | | | T I | | | |
| | TANTALUM | | | T A | | | |
| | INCONEL 825 | | | I 8 | | | |
| | INCONEL 625 | | | I 7 | | | |
| | INCONEL 600 | | | I 6 | | | |
| **DIAPHRAGM MATERIAL** | 304SS | | | | S | | |
| | 316SS | | | | S S | | |
| | 316L | | | | S L | | |
| | 316/316L SS DUAL CERTIFIED | | | | D C | | |
| | DUPLEX | | | | D | | |
| | SUPER DUPLEX | | | | S D | | |
| | MONEL 400 | | | | M | | |
| | HASTELLOY C-276 | | | | H C | | |
| | TATANIUM | | | | T I | | |
| | TANTALUM | | | | T A | | |
| | INCONEL 825 | | | | I 8 | | |
| | INCONEL 625 | | | | I 7 | | |
| | INCONEL 600 | | | | I 6 | | |
| **OPTIONS, LIST IN ALPHA-NUMERIC ORDER** | GLYCERIN FILL (FOOD GRADE) | | | | | G F | |
| | GLYCERIN WATER FILL | | | | | G W | |
| | ETHYLENE GLYCOL | | | | | E G | |
| | SILICONE FILL | | | | | S F | |
| | SILICONE FILL, LOW TEMPERATURE | | | | | S T | |
| | FLUOROLUBE FILLED | | | | | F O | |
| | HALOCARBON FILLED | | | | | H F | |
| | CRN REGISTERED | | | | | C | |
| | ROSH COMPLIANT | | | | | R | |
| | NACE COMPLIANT | | | | | N | |
| | SPECIAL | | | | | Z # # # | |

# D44 Flanged Seal (PTFE)

*Vac to 1,000 psi (0 to 6.900 kPa)*





## Description & Features:

- "Continuous use" seals - backing plate will prevent diaphragm from rupturing if pressure sensing instrument fails. Pressure will be held until instrument is replaced
- Various sizes and housing materials available
- ASME B40.100 compliant
- 5 year warranty

## Applications:

- Used in industrial applications such as oil refineries, pulp and paper mills and chemical plants

| Specifications | |
|---|---|
| **Housing** | 316 SS, Monel®, Hastelloy® B & C, titanium, tantalum, PVC, carbon steel, PTFE, acetal, other (nickel plated carbon steel or SS upper housing standard) |
| **Diaphragm** | PTFE for increased compatibility, sensitivity and versatility |
| **Construction** | Two piece construction |
| **Connection** | 1/4", 1/2" NPTF gauge connections standard (other NPTF gauge connections available) 1" (25mm), 1.5" (40mm) and 2" (50mm) pipe size and #150 and #300 pressure rating standard (other configurations available) |
| **Maximum Temperature Limit** | 400°F (204°C) |

## Order Codes

| Type* | Instrument Connection | Diaphragm Material | Lower Housing Wetted Parts | Upper Housing Non-Wetted Parts | |
|---|---|---|---|---|---|
| | | | | Carbon Steel | Stainless Steel |
| **1" - 150#RF** | | | | **Code** | |
| PTFE Diaphragm | 1/4" NPTF | PTFE | 316 SS - PTFE lined | D44003 | D44004 |
| | 1/2" NPTF | | | D44001 | D44002 |
| **1" - 300#RF** | | | | | |
| PTFE Diaphragm | 1/4" NPTF | PTFE | 316 SS - PTFE lined | D44007 | D44008 |
| | 1/2" NPTF | | | D44005 | D44006 |
| **1.5" - 150#RF** | | | | | |
| PTFE Diaphragm | 1/4" NPTF | PTFE | 316 SS - PTFE lined | D44011 | D44012 |
| | 1/2" NPTF | | | D44009 | D44010 |
| **1.5" - 300#RF** | | | | | |
| PTFE Diaphragm | 1/4" NPTF | PTFE | 316 SS - PTFE lined | D44015 | D44016 |
| | 1/2" NPTF | | | D44013 | D44014 |
| **2" - 150#RF** | | | | | |
| PTFE Diaphragm | 1/4" NPTF | PTFE | 316 SS - PTFE lined | D44019 | D44020 |
| | 1/2" NPTF | | | D44017 | D44018 |
| **2" - 300#RF** | | | | | |
| PTFE Diaphragm | 1/4" NPTF | PTFE | 316 SS - PTFE lined | D44023 | D44024 |
| | 1/2" NPTF | | | D44021 | D44022 |

*Replaceable diaphragms available

Hastelloy® is a registered trademark of Haynes International, Inc.
Monel® is a registered trademark of Inco Alloys International

## 150# RF C/W OPTIONAL FLUSHING PORT

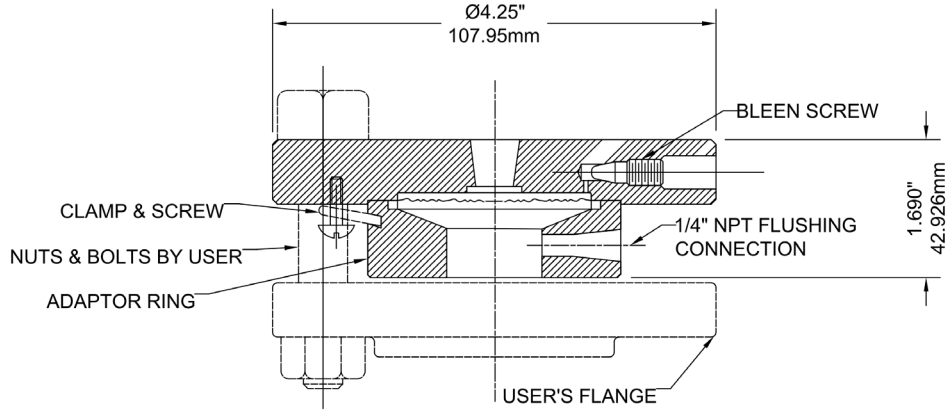


## 300# RF C/W OPTIONAL FLUSHING PORT

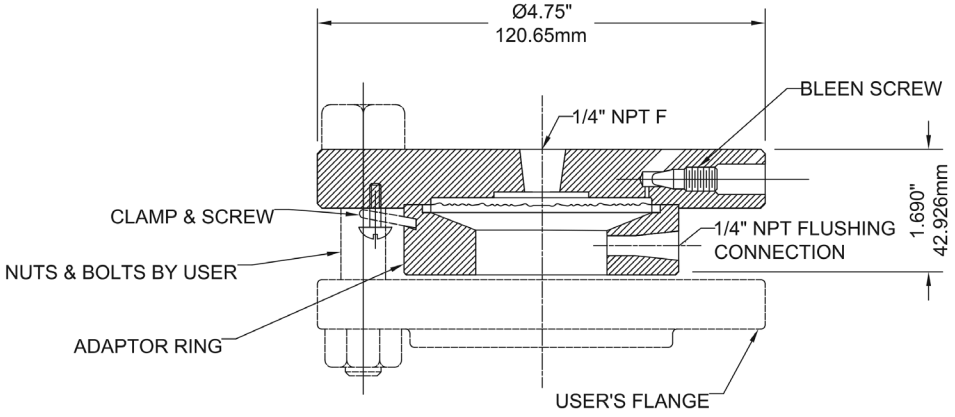

# D44 Flanged Seal All Welded

*30 to 2,500 psi (200 to 17,250 kPa)*



## Description & Features:

- "Continuous use" seals - backing plate will prevent diaphragm from rupturing if pressure sensing instrument fails. Pressure will be held until instrument is replaced
- Various sizes and housing materials available
- ASME B40.100 compliant
- 5 year warranty
- CRN registered for 316SS and Hastelloy® C-276 materials

## Applications:

- Used in industrial applications such as oil refineries, pulp and paper mills and chemical plants

| Specifications | |
|---|---|
| **Housing** | 316 SS, Monel®, Hastelloy® B & C, titanium, tantalum, PVC, carbon steel, PTFE, acetal, other (nickel plated carbon steel or SS upper housing standard) |
| **Construction** | Two piece construction |
| **Connection** | 1/4", 1/2" NPTF gauge connections standard (other NPTF gauge connections available)<br>1" (25mm), 1.5" (40mm) and 2" (50mm) pipe size and #150 and #300 pressure rating standard (other configurations available) |
| **Maximum Temperature Limit** | 450°F (232°C)<br>PTFE lined: 400°F (204°C)<br>(higher temperature limits available) |
| **Other** | Cleanout type for easy cleaning and calibrating. Saddle diaphragm seals available upon request. Flushing connections available |

## Order Codes

| Type* | Instrument Connection | Diaphragm Material | Lower Housing Wetted Parts | Upper Housing Non-Wetted Parts | |
|---|---|---|---|---|---|
| | | | | Carbon Steel | Stainless Steel |
| **1" - 150#RF** | | | | **Code** | |
| Welded Diaphragm | 1/4" NPTF | 316 SS | 316 SS | D441150SS25CS | D441150SS25SS |
| | | Tantalum | 316 SS - PTFE lined | D441150UL25CS | D441150UL25SS |
| | | Hastelloy® C | Monel® | D441150HM25CS | D441150HM25SS |
| | | Hastelloy® C | Hastelloy® C | D441150HH25CS | D441150HH25SS |
| | 1/2" NPTF | 316 SS | 316 SS | D441150SS5CS | D441150SS5SS |
| | | Tantalum | 316 SS - PTFE lined | D441150UL5CS | D441150UL5SS |
| | | Hastelloy® C | Monel® | D441150HM5CS | D441150HM5SS |
| | | Hastelloy® C | Hastelloy® C | D441150HH5CS | D441150HH5SS |
| **1" - 300#RF** | | | | **Code** | |
| Welded Diaphragm | 1/4" NPTF | 316 SS | 316 SS | D441300SS25CS | D441300SS25SS |
| | | Tantalum | 316 SS - PTFE lined | D441300UL25CS | D441300UL25SS |
| | | Hastelloy® C | Monel® | D441300HM25CS | D441300HM25SS |
| | | Hastelloy® C | Hastelloy® C | D441300HH25CS | D441300HH25SS |
| | 1/2" NPTF | 316 SS | 316 SS | D441300SS5CS | D441300SS5SS |
| | | Tantalum | 316 SS - PTFE lined | D441300UL5CS | D441300UL5SS |
| | | Hastelloy® C | Monel® | D441300HM5CS | D441300HM5SS |
| | | Hastelloy® C | Hastelloy® C | D441300HH5CS | D441300HH5SS |

*Replaceable and PTFE diaphragms available
Other materials, pipe size and pressure ratings available upon request

Hastelloy® is a registered trademark of Haynes International, Inc.
Monel® is a registered trademark of Inco Alloys International

## Order Codes

| Type* | Instrument Connection | Diaphragm Material | Lower Housing Wetted Parts | Upper Housing Non-Wetted Parts | |
|---|---|---|---|---|---|
| | | | | Carbon Steel | Stainless Steel |
| **1.5" - 150#RF** | | | | **Code** | |
| Welded Diaphragm | 1/4" NPTF | 316 SS | 316 SS | D4415150SS25CS | D4415150SS25SS |
| | | Tantalum | 316 SS - PTFE lined | D4415150UL25CS | D4415150UL25SS |
| | | Hastelloy® C | Monel® | D4415150HM25CS | D4415150HM25SS |
| | | Hastelloy® C | Hastelloy® C | D4415150HH25CS | D4415150HH25SS |
| | 1/2" NPTF | 316 SS | 316 SS | D4415150SS5CS | D4415150SS5SS |
| | | Tantalum | 316 SS - PTFE lined | D4415150UL5CS | D4415150UL5SS |
| | | Hastelloy® C | Monel® | D4415150HM5CS | D4415150HM5SS |
| | | Hastelloy® C | Hastelloy® C | D4415150HH5CS | D4415150HH5SS |
| **1.5" - 300#RF** | | | | **Code** | |
| Welded Diaphragm | 1/4" NPTF | 316 SS | 316 SS | D4415300SS25CS | D4415300SS25SS |
| | | Tantalum | 316 SS - PTFE lined | D4415300UL25CS | D4415300UL25SS |
| | | Hastelloy® C | Monel® | D4415300HM25CS | D4415300HM25SS |
| | | Hastelloy® C | Hastelloy® C | D4415300HH25CS | D4415300HH25SS |
| | 1/2" NPTF | 316 SS | 316 SS | D4415300SS5CS | D4415300SS5SS |
| | | Tantalum | 316 SS - PTFE lined | D4415300UL5CS | D4415300UL5SS |
| | | Hastelloy® C | Monel® | D4415300HM5CS | D4415300HM5SS |
| | | Hastelloy® C | Hastelloy® C | D4415300HH5CS | D4415300HH5SS |
| **2" - 150#RF** | | | | **Code** | |
| Welded Diaphragm | 1/4" NPTF | 316 SS | 316 SS | D442150SS25CS | D442150SS25SS |
| | | Tantalum | 316 SS - PTFE lined | D442150UL25CS | D442150UL25SS |
| | | Hastelloy® C | Monel® | D442150HM25CS | D442150HM25SS |
| | | Hastelloy® C | Hastelloy® C | D442150HH25CS | D442150HH25SS |
| | 1/2" NPTF | 316 SS | 316 SS | D442150SS5CS | D442150SS5SS |
| | | Tantalum | 316 SS - PTFE lined | D442150UL5CS | D442150UL5SS |
| | | Hastelloy® C | Monel® | D442150HM5CS | D442150HM5SS |
| | | Hastelloy® C | Hastelloy® C | D442150HH5CS | D442150HH5SS |
| **2" - 300#RF** | | | | **Code** | |
| Welded Diaphragm | 1/4" NPTF | 316 SS | 316 SS | D442300SS25CS | D442300SS25SS |
| | | Tantalum | 316 SS - PTFE lined | D442300UL25CS | D442300UL25SS |
| | | Hastelloy® C | Monel® | D442300HM25CS | D442300HM25SS |
| | | Hastelloy® C | Hastelloy® C | D442300HH25CS | D442300HH25SS |
| | 1/2" NPTF | 316 SS | 316 SS | D442300SS5CS | D442300SS5SS |
| | | Tantalum | 316 SS - PTFE lined | D442300UL5CS | D442300UL5SS |
| | | Hastelloy® C | Monel® | D442300HM5CS | D442300HM5SS |
| | | Hastelloy® C | Hastelloy® C | D442300HH5CS | D442300HH5SS |

*Replaceable and PTFE diaphragms available
Other fill fluids (seal only), materials, pipe size and pressure ratings available upon request.
For technical drawings, refer to D44 PTFE.

Hastelloy® is a registered trademark of Haynes International, Inc.
Monel® is a registered trademark of Inco Alloys International

# D44 Flanged Seal All Welded

## Engineering Codes

| D44 SERIES, WELDED | | D44 - | | - | | - | | - | | - | | - | | - | | - | |
|---|---|---|---|---|---|---|---|---|---|---|---|---|---|---|---|---|---|
| **INSTRUMENT CONNECTION** | 1/4" NPT FEMALE | | F 4 | | | | | | | | | | | | | | |
| | 3/8" NPT FEMALE | | F 3 | | | | | | | | | | | | | | |
| | 1/2" NPT FEMALE | | F 2 | | | | | | | | | | | | | | |
| | 3/4" NPT FEMALE | | F 5 | | | | | | | | | | | | | | |
| | 1" NPT FEMALE | | F 1 | | | | | | | | | | | | | | |
| | G 1/4" FEMALE | | C 4 | | | | | | | | | | | | | | |
| | G 1/2" FEMALE | | C 2 | | | | | | | | | | | | | | |
| | G 3/4" FEMALE | | C 5 | | | | | | | | | | | | | | |
| | G 1" FEMALE | | C 1 | | | | | | | | | | | | | | |
| **PROCESS CONNECTION** | 1/2" | | | | 0 5 | | | | | | | | | | | | |
| | 3/4" | | | | 0 7 | | | | | | | | | | | | |
| | 1" | | | | 1 0 | | | | | | | | | | | | |
| | 1.5" | | | | 1 5 | | | | | | | | | | | | |
| | 2" | | | | 2 0 | | | | | | | | | | | | |
| | 3" | | | | 3 0 | | | | | | | | | | | | |
| | DN 15 | | | | D 1 5 | | | | | | | | | | | | |
| | DN 20 | | | | D 2 0 | | | | | | | | | | | | |
| | DN 25 | | | | D 2 5 | | | | | | | | | | | | |
| | DN 30 | | | | D 3 0 | | | | | | | | | | | | |
| | DN 40 | | | | D 4 0 | | | | | | | | | | | | |
| | DN 50 | | | | D 5 0 | | | | | | | | | | | | |
| **FLANGE RATING** | 150# ASME | | | | | | A 1 5 | | | | | | | | | | |
| | 300# ASME | | | | | | A 3 0 | | | | | | | | | | |
| | 600# ASME | | | | | | A 6 0 | | | | | | | | | | |
| | 900# ASME | | | | | | A 9 0 | | | | | | | | | | |
| | 1500# ASME | | | | | | A 1 5 0 | | | | | | | | | | |
| | 2500# ASME | | | | | | A 2 5 0 | | | | | | | | | | |
| | PN 10 BAR | | | | | | B 1 0 | | | | | | | | | | |
| | PN 16 BAR | | | | | | B 1 6 | | | | | | | | | | |
| | PN 25 BAR | | | | | | B 2 5 | | | | | | | | | | |
| | PN 40 BAR | | | | | | B 4 0 | | | | | | | | | | |
| | PN 63 BAR | | | | | | B 6 3 | | | | | | | | | | |
| | PN 100 BAR | | | | | | B 1 0 0 | | | | | | | | | | |
| | PN 160 BAR | | | | | | B 1 6 0 | | | | | | | | | | |
| **FLANGE TYPE** | RF, RAISED FACE | | | | | | | | R F | | | | | | | | |
| | RTJ, RING JOINT | | | | | | | | R J | | | | | | | | |
| | FF, FLAT FACE | | | | | | | | F F | | | | | | | | |
| **UPPER HOUSING MATERIAL** | CARBON STEEL | | | | | | | | | | C S | | | | | | |
| | 304SS | | | | | | | | | | S S | | | | | | |
| | 316SS | | | | | | | | | | S S | | | | | | |
| | 316L | | | | | | | | | | S L | | | | | | |
| | 316/316L SS DUAL CERTIFIED | | | | | | | | | | D C | | | | | | |
| | DUPLEX | | | | | | | | | | D D | | | | | | |
| | SUPER DUPLEX | | | | | | | | | | S D | | | | | | |
| | MONEL 400 | | | | | | | | | | M M | | | | | | |
| | HASTELLOY C-276 | | | | | | | | | | H C | | | | | | |
| | TITANIUM GRADE 2 (3.7035) | | | | | | | | | | T 2 | | | | | | |
| | TITANIUM GRADE 7 (3.7235) | | | | | | | | | | T 7 | | | | | | |
| | TATANLUM | | | | | | | | | | T A | | | | | | |
| | INCONEL 825 | | | | | | | | | | I 8 | | | | | | |
| | INCONEL 625 | | | | | | | | | | I 7 | | | | | | |
| | INCONEL 600 | | | | | | | | | | I 6 | | | | | | |
| **LOWER HOUSING MATERIAL** | CARBON STEEL | | | | | | | | | | | C S | | | | | |
| | 304SS | | | | | | | | | | | S S | | | | | |
| | 316SS | | | | | | | | | | | S S | | | | | |
| | 316L | | | | | | | | | | | S L | | | | | |
| | 316/316L SS DUAL CERTIFIED | | | | | | | | | | | D C | | | | | |
| | DUPLEX | | | | | | | | | | | D D | | | | | |
| | SUPER DUPLEX | | | | | | | | | | | S D | | | | | |
| | MONEL 400 | | | | | | | | | | | M M | | | | | |
| | HASATELLOY C-276 | | | | | | | | | | | H C | | | | | |
| | TITANIUM GRADE 2 (3.7035) | | | | | | | | | | | T 2 | | | | | |
| | TITANIUM GRADE 7 (3.7235) | | | | | | | | | | | T 7 | | | | | |
| | TANTALUM | | | | | | | | | | | T A | | | | | |
| | INCONEL 825 | | | | | | | | | | | I 8 | | | | | |
| | INCONEL 625 | | | | | | | | | | | I 7 | | | | | |
| | INCONEL 600 | | | | | | | | | | | I 6 | | | | | |
| | Carpenter 20 | | | | | | | | | | | C 2 | | | | | |

# D44 Flanged Seal All Welded

## Engineering Codes (Continued)

| D44 SERIES, WELDED | | D 4 4 - □□ - □□□ - □□□□ - □□ - □□ - □□ - □□ - □□ - □□□□ |
|---|---|---|
| **DIAPHRAGM MATERIAL** | NICKEL | N I |
| | 316SS | S S |
| | 316L | S L |
| | 316/316L SS DUAL CERTIFIED | D C |
| | DUPLEX | D |
| | SUPER DUPLEX | S D |
| | MONEL 400 | M |
| | HASATELLOY C-276 | H C |
| | TITANIUM GRADE 2 (3.7035) | T 2 |
| | TITANIUM GRADE 7 (3.7235) | T 7 |
| | TANTALUM | T A |
| | INCONEL 825 | I 8 |
| | INCONEL 625 | I 7 |
| | INCONEL 600 | I 6 |
| | TEFLON, PTFE LINED | T |
| **LINING** | NONE | 0 |
| | VITON, FKM | V |
| | KALREZ, FFKM | K |
| | TEFLON, PTFE LINED | T |
| | GOLD PLATED | G P |
| | ECTFE, ETHYLENE | E C |
| | PFA, PERFLUOROALKOXY - FDA | P F |
| | PFA, PERFLUOROALKOXY - ANTISTATIC | P A |
| **OPTIONS, LIST IN ALPHA-NUMERIC ORDER** | GLYCERIN FILL (FOOD GRADE) | G F |
| | GLYCERIN WATER FILL | G W |
| | ETHYLENE Glycol | E G |
| | SILICONE FILL | S F |
| | SILICONE FILL, LOW TEMPERATURE | S T |
| | FLUOROLUBE FILLED | F O |
| | HALOCARBON FILLED | H F |
| | PTFE LINED (FOR LOWER HOUSING & DIAPHRAGM) | P T |
| | FLUSHING CONNECTION, 1/4" NPT FEMALE | F 4 |
| | FLUSHING CONNECTION, 1/4" NPT FEMALE WITH SS PLUG | F P 4 |
| | CRN REGISTERED | C |
| | ROSH COMPLIANT | R |
| | NACE COMPLIANT | N |
| | SPECIAL | Z # # # |

# D46 Flanged Flush Mount Seal

*30 to 1,300 psi (207 to 8,970 kPa)*



## Description & Features:

- One-piece design - no internal gaskets or o-rings
- Diaphragm is flush to the gasket sealing surface so no internal cavities for media buildup
- Various sizes available
- ASME B40.100 compliant
- 5 year warranty

## Applications:

- Oil refineries, pulp and paper mills, chemical plants
- Where media buildup is a concern

| Specifications | |
|---|---|
| **Housing** | 316 SS |
| **Diaphragm** | 316L SS bonded to housing |
| **Construction** | One piece construction |
| **Connection** | 1/4", 1/2" NPTF gauge connections standard<br>1.5" (40mm), 2" (50mm) and 3" (75mm) pipe size |
| **Maximum Temperature Limit** | 450°F (232°C) |

## Order Codes

| Type | Instrument Connection | Code |
|---|---|---|
| 2" - 150#RF | 1/4" NPTF | D462548 |
| | 1/2" NPTF | D462549 |
| 2" - 300#RF | 1/4" NPTF | D462550 |
| | 1/2" NPTF | D462551 |
| 2" - 600#RF | 1/4" NPTF | D462552 |
| | 1/2" NPTF | D462553 |
| 3" - 150#RF | 1/4" NPTF | D462554 |
| | 1/2" NPTF | D462555 |
| 3" - 300#RF | 1/4" NPTF | D462556 |
| | 1/2" NPTF | D462557 |
| 3" - 600#RF | 1/4" NPTF | D462558 |
| | 1/2" NPTF | D462559 |

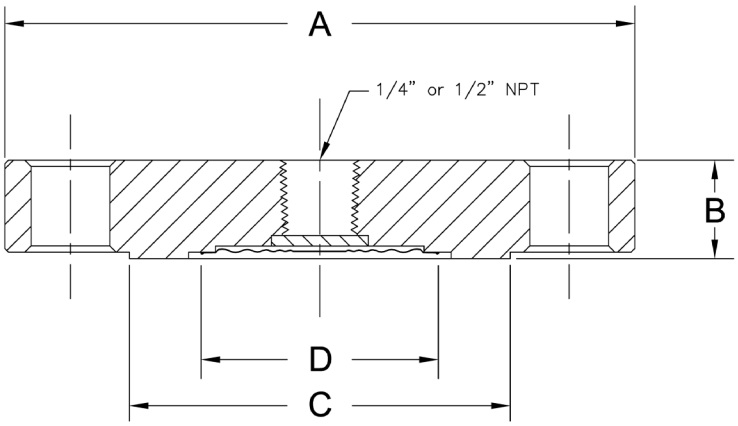


| Pipe Size | Rating | A | B | C | D |
|---|---|---|---|---|---|
| 2" | 150# | 6" | 0.88" | 3.6" | 2.2" |
| | 300# | 6.5" | 0.88" | | |
| | 600# | | 1.25" | | |
| 3" | 150# | 7.5" | 0.94" | 5" | 2.2" or 3" |
| | 300# | 8.2" | 1.12" | | |
| | 600# | | 1.5" | | |

Other sizes available upon request

# D46 Flanged Flush Mount Seal

## Engineering Codes

| D46 SERIES, WELDED FLUSH | | D 4 6 - | - | - | - | - | - | - | - | - |
|---|---|---|---|---|---|---|---|---|---|---|
| **INSTRUMENT CONNECTION** | 1/4" NPT FEMALE | F 4 | | | | | | | | |
| | 3/8" NPT FEMALE | F 3 | | | | | | | | |
| | 1/2" NPT FEMALE | F 2 | | | | | | | | |
| | 3/4" NPT FEMALE | F 5 | | | | | | | | |
| | 1" NPT FEMALE | F 1 | | | | | | | | |
| | G 1/4" FEMALE | C 4 | | | | | | | | |
| | G 1/2" FEMALE | C 2 | | | | | | | | |
| | G 3/4" FEMALE | C 5 | | | | | | | | |
| | G 1" FEMALE | C 1 | | | | | | | | |
| **PROCESS CONNECTION,** ASME B16.5-2017 | 1" | | 1 0 | | | | | | | |
| | 1.5" | | 1 5 | | | | | | | |
| | 2" | | 2 0 | | | | | | | |
| | 2.5" | | 2 1 | | | | | | | |
| | 3" | | 3 0 | | | | | | | |
| | 4" | | 4 0 | | | | | | | |
| | 5" | | 5 0 | | | | | | | |
| | 6" | | 6 0 | | | | | | | |
| **PROCESS CONNECTION,** DIN EN 1092-1 | DN 15 | | D 1 5 | | | | | | | |
| | DN 20 | | D 2 0 | | | | | | | |
| | DN 25 | | D 2 5 | | | | | | | |
| | DN 40 | | D 4 0 | | | | | | | |
| | DN 50 | | D 5 0 | | | | | | | |
| | DN 65 | | D 6 0 | | | | | | | |
| | DN 80 | | D 8 0 | | | | | | | |
| | DN100 | | D 1 0 | | | | | | | |
| | DN 125 | | D 1 2 | | | | | | | |
| **PROCESS CONNECTION, API 6A** | 1 1/8" | | 1 8 | | | | | | | |
| | 1 1/6" | | 1 6 | | | | | | | |
| | 1 13/16" | | 3 6 | | | | | | | |
| | 2 1/16" | | 2 6 | | | | | | | |
| **FLANGE RATING** | 150# ASME | | | A 1 5 | | | | | | |
| | 300# ASME | | | A 3 0 | | | | | | |
| | 600# ASME | | | A 6 0 | | | | | | |
| | 900# ASME | | | A 9 0 | | | | | | |
| | 1500# ASME | | | A 1 5 0 | | | | | | |
| | 2500# ASME | | | A 2 5 0 | | | | | | |
| | PN 10 BAR | | | B 1 0 | | | | | | |
| | PN 16 BAR | | | B 1 6 | | | | | | |
| | PN 25 BAR | | | B 2 5 | | | | | | |
| | PN 40 BAR | | | B 4 0 | | | | | | |
| | PN 63 BAR | | | B 6 3 | | | | | | |
| | PN 100 BAR | | | B 1 0 0 | | | | | | |
| | PN 160 BAR | | | B 1 6 0 | | | | | | |
| | PN 200 BAR | | | B 2 0 0 | | | | | | |
| | 2,000 PSI | | | C 0 2 | | | | | | |
| | 3,000 PSI | | | C 0 3 | | | | | | |
| | 5,000 PSI | | | C 0 5 | | | | | | |
| | 10,000 PSI | | | C 1 0 | | | | | | |
| | 15,000 PSI | | | C 1 5 | | | | | | |
| | 20,000 PSI | | | C 2 0 | | | | | | |
| **FLANGE TYPE** | RF, RAISED FACE | | | | R F | | | | | |
| | RTJ, RING JOINT | | | | R J | | | | | |
| | FF, FLAT FACE | | | | F F | | | | | |
| **UPPER HOUSING MATERIAL** | CARBON STEEL | | | | | C S | | | | |
| | 304SS | | | | | S | | | | |
| | 316SS | | | | | S S | | | | |
| | 316L | | | | | S L | | | | |
| | 316/316L SS DUAL CERTIFIED | | | | | D C | | | | |
| | DUPLEX | | | | | D | | | | |
| | SUPER DUPLEX | | | | | S D | | | | |
| | MONEL 400 | | | | | M | | | | |
| | HASATELLOY C-276 | | | | | H C | | | | |
| | TATANIUM GRADE 2 (3.7035) | | | | | T 2 | | | | |
| | TATANIUM GRADE 7 (3.7235) | | | | | T 7 | | | | |
| | TANTALUM | | | | | T A | | | | |
| | INCONEL 825 | | | | | I 8 | | | | |
| | INCONEL 625 | | | | | I 7 | | | | |
| | INCONEL 600 | | | | | I 6 | | | | |

## Engineering Codes (Continued)

| | | | | | |
|---|---|---|---|---|---|
| **DIAPHRAGM MATERIAL** | NICKEL | N | I | | |
| | 304SS | S | | | |
| | 316SS | S | S | | |
| | 316L | S | L | | |
| | 316/316L SS DUAL CERTIFIED | D | C | | |
| | DUPLEX | D | | | |
| | SUPER DUPLEX | S | D | | |
| | MONEL 400 | M | | | |
| | HASATELLOY C-276 | H | C | | |
| | TATANIUM GRADE 2 (3.7035) | T | 2 | | |
| | TATANIUM GRADE 7 (3.7235) | T | 7 | | |
| | TANTALUM | T | A | | |
| | INCONEL 825 | I | 8 | | |
| | INCONEL 625 | I | 7 | | |
| | INCONEL 600 | I | 6 | | |
| **LINING** | NONE | | | 0 | |
| | VITON, FKM | | | V | |
| | KALREZ, FFKM | | | K | |
| | TEFLON, PTFE LINED | | | T | |
| | GOLD PLATED | | | G | P |
| | ECTFE, ETHYLENE | | | E | C |
| | PFA, PERFLUOROALKOXY - FDA | | | P | F |
| | PFA, PERFLUOROALKOXY - ANTISTATIC | | | P | A |
| **OPTIONS,** | GLYCERIN FILL (FOOD GRADE) | | | | G F |
| **LIST IN ALPHA-NUMERIC ORDER** | GLYCERIN WATER FILL | | | | G W |
| | ETHYLENE Glycol | | | | E G |
| | SILICONE FILL | | | | S F |
| | SILICONE FILL, LOW TEMPERATURE | | | | S T |
| | FLUOROLUBE FILLED | | | | F O |
| | HALOCARBON FILLED | | | | H F |
| | CRN REGISTERED | | | | C |
| | ROSH COMPLIANT | | | | R |
| | NACE COMPLIANT | | | | N |
| | SPECIAL | | | | Z # # # |

# D70 Heavy Duty 2-Piece Industrial Seal

*30 to 2,500 psi (207 to 17,250 kPa)*




RoHS compliant

## Description & Features:

- Two piece construction and designed to withstand even the most severe process applications
- "Continuous use" seals - backing plate will prevent diaphragm from rupturing if pressure sensing instrument fails. Pressure will be held until instrument is replaced
- Diaphragm is separable for servicing and is available with a 1/8" NPT or 1/4" NPT flushing connection for removing any material which may clog the process connection
- Standard diaphragm is constructed of AISI 316L stainless steel and welded to the upper chamber of the seal for pressures 30 psi (200 kPa) and above; optional FKM diaphragm available for ranges from 30" Hg Vacuum (-100 kPa) up to 100 psi (690 kPa). Other diaphragms available
- FKM diaphragm is highly recommended for applications less than 10 psi
- ASME B40.100 compliant
- CRN registered (all 316 SS only)
- 5 year warranty

## Applications:

- Where the process fluid is corrosive or viscous and would clog instrument internals/solidify within the pressure gauge, switch or transmitter

| Specifications | |
|---|---|
| **Housing** | 316L SS, Monel®, Hastelloy® C |
| **Diaphragm** | 316L SS, Monel®, Hastelloy® C, FKM |
| **Construction** | Two piece construction |
| **Gasket Material** | Buna N (FKM, PTFE optional) |
| **Connection** | Bottom: 1/4", 1/2", 3/4" and 1" NPTF<br>Top: 1/4" and 1/2" NPTF |
| **Process Temperature** | -22°F to 212°F (-30°C to 100°C) |
| **Other** | Flushing connection available. Other materials such as PTFE, PVC, carbon steel, Alloy 20, Hastelloy® B, titanium, tantalum, Inconel 825, Inconel 625, Inconel 600, Duplex SS, Super Duplex SS, 316/316L Dual Certified, Monel 400 etc are available upon request |

Hastelloy® is a registered trademark of Haynes International, Inc. Monel® is a registered trademark of Inco Alloys International

## Order Codes (products in bold are normally stock in North America)

| Lower Housing (Bottom) | |
|---|---|
| 316L SS, 1/4" NPTF | **D70954** |
| 316L SS, 1/2" NPTF | **D70956** |
| 316L SS, 1/2" NPTF with flushing | **D70957** |
| 316L SS, 3/4" NPTF | D70963 |
| 316L SS, 3/4" NPTF with flushing | D70959 |
| 316L SS, 1" NPTF | **D70964** |
| 316L SS, 1" NPTF with flushing | D70965 |
| 316L SS, 1/4" NPTF FKM | D70954V |
| 316L SS, 1/2" NPTF FKM | D70956V |
| 316L SS, 1/2" NPTF with flushing, FKM | D70957V |
| 316L SS, 3/4" NPTF with flushing, FKM | D70959V |
| 316L SS, 3/4" NPTF FKM | D70963V |
| 316L SS, 1" NPTF FKM | D70964V |
| 316L SS, 1" NPTF with flushing, FKM | D70965V |
| Monel®, 1/4" NPTF | D70954M |
| Monel®, 1/2" NPTF | D70956M |
| Monel®, 1/2" NPTF with flushing | D70957M |
| Monel®, 3/4" NPTF with flushing | D70959M |
| Monel®, 3/4" NPTF | D70963M |
| Monel®, 1" NPTF | D70964M |
| Monel®, 1" NPTF with flushing | D70965M |
| Hastelloy® C, 1/4" NPTF | D70954HASC |
| Hastelloy® C, 1/2" NPTF | D70956HASC |
| Hastelloy® C, 1/2" NPTF with flushing | D70957HASC |
| Hastelloy® C, 3/4" NPTF with flushing | D70959HASC |
| Hastelloy® C, 3/4" NPTF | D70963HASC |
| Hastelloy® C, 1" NPTF | D70964HASC |
| Hastelloy® C, 1" NPTF with flushing | D70965HASC |

| Upper Housing (Top) | |
|---|---|
| 316L SS, 1/4" NPTF 316L SS diaphragm | **D70950** |
| 316L SS, 1/4" NPTF Monel® diaphragm | D70950M |
| 316L SS, 1/4" NPTF Hastelloy® C diaphragm | D70950HASC |
| 316L SS, 1/4" NPTF FKM diaphragm | D70951 |
| 316L SS, 1/2" NPTF 316L SS diaphragm | **D70952** |
| 316L SS, 1/2" NPTF Monel® diaphragm | D70952M |
| 316L SS, 1/2" NPTF Hastelloy® C diaphragm | D70952HASC |
| 316L SS, 1/2" NPTF FKM diaphragm | **D70953** |

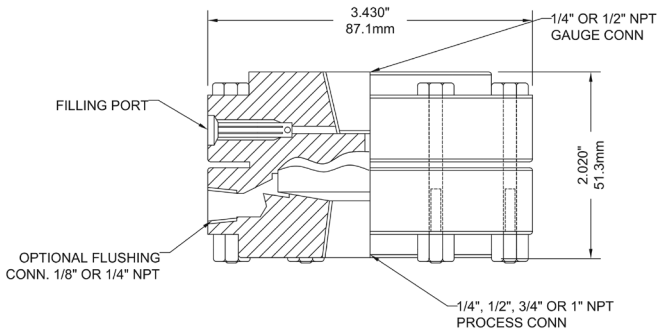


Hastelloy® is a registered trademark of Haynes International, Inc.
Monel® is a registered trademark of Inco Alloys International

# D70 Heavy Duty 2-Piece Industrial Seal

## Engineering Codes

| D70 SERIES, 2-pc | | D70 - | - | - | - | - | - | - | - |
|---|---|---|---|---|---|---|---|---|---|
| **INSTRUMENT CONNECTION** | 1/4" NPT FEMALE | F 4 | | | | | | | |
| | 3/8" NPT FEMALE | F 3 | | | | | | | |
| | 1/2" NPT FEMALE | F 2 | | | | | | | |
| | 3/4" NPT FEMALE | F 5 | | | | | | | |
| | 1" NPT FEMALE | F 1 | | | | | | | |
| | G 1/4" FEMALE | C 4 | | | | | | | |
| | G 1/2" FEMALE | C 2 | | | | | | | |
| | G 3/4" FEMALE | C 5 | | | | | | | |
| | G 1" FEMALE | C 1 | | | | | | | |
| **PROCESS CONNECTION** | 1/4" NPT FEMALE | | F 4 | | | | | | |
| | 3/8" NPT FEMALE | | F 3 | | | | | | |
| | 1/2" NPT FEMALE | | F 2 | | | | | | |
| | 3/4" NPT FEMALE | | F 5 | | | | | | |
| | 1" NPT FEMALE | | F 1 | | | | | | |
| | 1/4" NPT MALE | | N 4 | | | | | | |
| | 3/8" NPT MALE | | N 3 | | | | | | |
| | 1/2" NPT MALE | | N 2 | | | | | | |
| | 3/4" NPT MALE | | N 5 | | | | | | |
| | 1" NPT MALE | | N 1 | | | | | | |
| | G 1/4" FEMALE | | C 4 | | | | | | |
| | G 1/2" FEMALE | | C 2 | | | | | | |
| | G 3/4" FEMALE | | C 5 | | | | | | |
| | G 1" FEMALE | | C 1 | | | | | | |
| | G 1/4" MALE | | G 4 | | | | | | |
| | G 1/2" MALE | | G 2 | | | | | | |
| | G 3/4" MALE | | G 5 | | | | | | |
| | G 1" MALE | | G 1 | | | | | | |
| | M14*1.5 | | M 4 | | | | | | |
| | M20*1.5 | | M 2 | | | | | | |
| **UPPER HOUSING MATERIAL** | CARBON STEEL | | | C S | | | | | |
| | 304SS | | | S | | | | | |
| | 316SS | | | S S | | | | | |
| | 316L | | | S L | | | | | |
| | 316/316L SS DUAL CERTIFIED | | | D C | | | | | |
| | DUPLEX | | | D | | | | | |
| | SUPER DUPLEX | | | S D | | | | | |
| | MONEL 400 | | | M | | | | | |
| | HASTELLOY C-276 | | | H C | | | | | |
| | TITANIUM | | | T I | | | | | |
| | TANTALUM | | | T A | | | | | |
| | INCONEL 825 | | | I 8 | | | | | |
| | INCONEL 625 | | | I 7 | | | | | |
| | INCONEL 600 | | | I 6 | | | | | |
| **LOWER HOUSING MATERIAL** | CARBON STEEL | | | | C S | | | | |
| | NICKEL | | | | N I | | | | |
| | 304SS | | | | S | | | | |
| | 316SS | | | | S S | | | | |
| | 316L | | | | S L | | | | |
| | 316/316L SS DUAL CERTIFIED | | | | D C | | | | |
| | DUPLEX | | | | D | | | | |
| | SUPER DUPLEX | | | | S D | | | | |
| | MONEL 400 | | | | M | | | | |
| | HASTELLOY C-276 | | | | H C | | | | |
| | TITANIUM | | | | T I | | | | |
| | TANTALUM | | | | T A | | | | |
| | INCONEL 825 | | | | I 8 | | | | |
| | INCONEL 625 | | | | I 7 | | | | |
| | INCONEL 600 | | | | I 6 | | | | |
| | SOLID PTFE LOWER HOUSING | | | | L T | | | | |

# D70 Heavy Duty 2-Piece Industrial Seal

## Engineering Codes (Continued)

| D70 SERIES, 2-pc | | D70 - □□ - □□ - □□ - □□ - □□ - □□ - □ - □□□□ |
|---|---|---|
| **DIAPHRAGM MATERIAL** | NICKEL | NI |
| | 304SS | S |
| | 316SS | SS |
| | 316L | SL |
| | 316/316L SS DUAL CERTIFIED | DC |
| | DUPLEX | D |
| | SUPER DUPLEX | SD |
| | MONEL 400 | M |
| | HASTELLOY C-276 | HC |
| | TITANIUM grade 2 (3.7035) | T2 |
| | TITANIUM grade 7 (3.7235) | T7 |
| | TANTALUM | TA |
| | INCONEL 825 | I8 |
| | INCONEL 625 | I7 |
| | INCONEL 600 | I6 |
| | VITON, FKM | V |
| | TEFLON, PTFE | T |
| **LINING** | NONE | 0 |
| | VITON, FKM | V |
| | KALREZ, FFKM | K |
| | TEFLON, PTFE LINED | T |
| | GOLD PLATED | GP |
| | ECTFE, ETHYLENE | EC |
| | PFA, PERFLUOROALKOXY - FDA | PF |
| | PFA, PERFLUOROALKOXY - ANTISTATIC | PA |
| **GASKET MATERIAL** | BUNA-N, NBR | B |
| | TEFLON, PTFE | P |
| | VITON, FKM | V |
| | GRAFOIL | G |
| **OPTIONS, LIST IN ALPHA-NUMERIC ORDER** | GLYCERIN FILL (FOOD GRADE) | GF |
| | GLYCERIN WATER FILL | GW |
| | ETHYLENE GLYCOL | EG |
| | SILICONE FILL | SF |
| | SILICONE FILL, LOW TEMPERATURE | ST |
| | FLUOROLUBE FILLED | FO |
| | HALOCARBON FILLED | HF |
| | SYLTHERM 800 | SH |
| | FLUSHING CONNECTION, 1/4" NPT FEMALE | F4 |
| | FLUSHING CONNECTION, 1/4" NPT FEMALE with SS PLUG | FP4 |
| | CRN REGISTERED | C |
| | ROSH COMPLIANT | R |
| | NACE COMPLIANT | N |
| | SPECIAL | Z### |

# D71 NACE 2-Piece Seal (Hastelloy® C)

*30 to 2,500 psi (207 to 17,250 kPa)*



## Description & Features:

- Can be used on applications requiring a NACE compliant MR0103-2003 diaphragm seal
- ASME B40.100 compliant
- 5 year warranty

## Applications:

- Sour gas applications requiring instrumentation that meet NACE International Standards

| Specifications | |
|---|---|
| **Housing** | Hastelloy® C |
| **Diaphragm** | Hastelloy® C, welded |
| **Construction** | Two piece construction |
| **Gasket Material** | Buna N (FKM, PTFE optional) |
| **Connection** | Top: 1/4" and 1/2" NPTF<br>Bottom: 1/4", 1/2", 3/4" and 1" NPTF |
| **Process Temperature** | -22°F to 212°F (-30°C to 100°C) |
| **Other** | Flushing connections available. Other materials available upon request. |

## Order Codes

| Upper Housing (Top) | |
|---|---|
| Hast. C, 1/4" NPTF conn., Hastelloy® C diaphragm | D71966HASC75 |
| Hast. C, 1/2" NPTF conn., Hastelloy® C diaphragm | D71967HASC75 |
| **Lower Housing (Bottom)** | |
| Hastelloy® C, 1/4" NPTF | D71954HASC75 |
| Hastelloy® C, 1/2" NPTF | D71956HASC75 |
| Hastelloy® C, 1/2" NPTF with flushing | D71957HASC75 |
| Hastelloy® C, 3/4" NPTF | D71963HASC75 |
| Hastelloy® C, 3/4" NPTF with flushing | D71959HASC75 |
| Hastelloy® C, 1" NPTF | D71964HASC75 |
| Hastelloy® C, 1" NPTF with flushing | D71965HASC75 |

**Option suffix for above order code only:**

SF-D = Silicone fill (seal only)
FL-D = Fluorolube fill (seal only)
Other fill fluids (seal only) available upon request

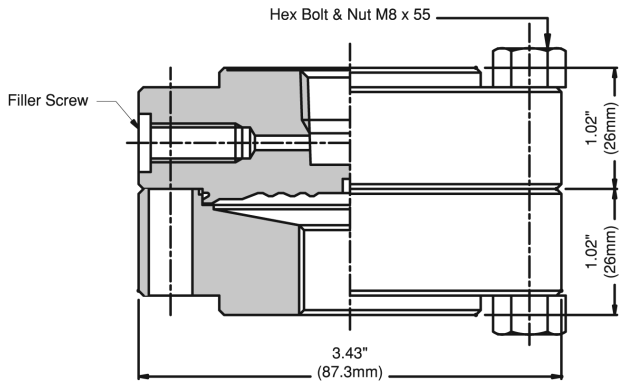


Hastelloy® is a registered trademark of Haynes International, Inc.

# D71 NACE 2-Piece Seal (Monel®)

*30 to 2,500 psi (207 to 17,250 kPa)*



## Description & Features:

- Can be used on applications requiring a NACE compliant MR0175-2003 diaphragm seal
- ASME B40.100 compliant
- 5 year warranty

## Applications:

- Sour gas applications requiring instrumentation that meet NACE International Standards

| Specifications | |
|---|---|
| **Housing** | 316 SS |
| **Diaphragm** | Monel®, welded |
| **Construction** | Two piece construction |
| **Gasket Material** | Buna N (FKM, PTFE optional) |
| **Connection** | Top: 1/4" and 1/2" NPTF<br>Bottom: 1/4", 1/2", 3/4" and 1" NPTF |
| **Process Temperature** | -22°F to 212°F (-30°C to 100°C) |
| **Other** | Flushing connections available. Other materials available upon request. |

## Order Codes

| Upper Housing (Top) | |
|---|---|
| 316 SS, 1/4" NPTF Monel® diaphragm | D7195003 |
| 316 SS, 1/2" NPTF Monel® diaphragm | D7195203 |
| **Lower Housing (Bottom)** | |
| 316 SS, 1/4" NPTF | D7195403 |
| 316 SS, 1/2" NPTF | D7195603 |
| 316 SS, 1/2" NPTF with flushing | D7195703 |
| 316 SS, 3/4" NPTF | D7196303 |
| 316 SS, 3/4" NPTF with flushing | D7195903 |
| 316 SS, 1" NPTF | D7196403 |
| 316 SS, 1" NPTF with flushing | D7196503 |

**Option suffix for above order code only:**
SF-D = Silicone fill (seal only)
FL-D = Fluorolube fill (seal only)
Other fill fluids (seal only) available upon request

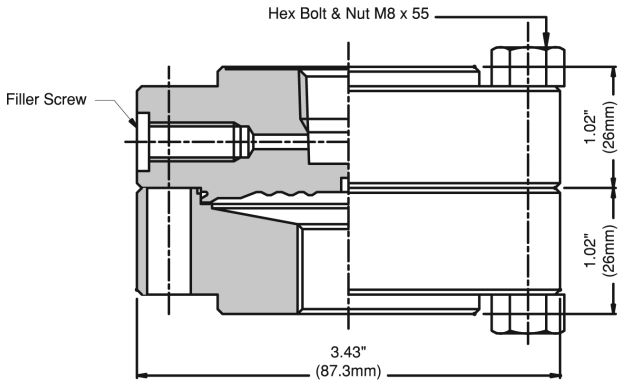


Monel® is a registered trademark of Inco Alloys International

# D81 Isolation Ring

*Vacuum to 1,000 psi (100 to 6,900 kPa)*



## Description & Features:

- Various materials and configurations available to fit your specific application
- Unique WinCONNECT fitting allows for easy field removal of gauge or switch for calibration, repair or replacement without interrupting process flow
- Thicker break-resistant instrument stem
- Optional tees for installation of multiple instruments
- ASME B40.100 compliant
- 5 year warranty

## Applications:

- This isolation ring is ideal for measuring pressures of viscous or slurry media, utilizing a flow-through system that eliminates clogging or pressure blocking from occurring
- Designed for installation in water treatment facilities, mining and pulp & paper plants

Note: WinCONNECT comes standard with all D81 Isolation Rings

## Order Codes

| Specifications | | |
|---|---|---|
| **Sensor Type** | WIR | Wafer, nests inside bolt circle |
| | RIR | Full flange (150# standard, 300# optional) |
| | SIR | Threaded connections |
| **Pipe I.D.** | 1” - 48” | 1” (25mm) up to 48” (1,220mm). Consult factory for larger sizes |
| **Centre Section** | C | Carbon Steel |
| | S | 316 SS |
| **End Plates** | C | Carbon Steel |
| | S | 316 SS |
| | A | Acetal |
| | TEF | PTFE |
| | H | Hastelloy® C |
| | T | Titanium |
| | U | UHMW / Ultra High Molecular Weight Polyethylene |
| **Elastomer (Sleeve)** | N | Neoprene (-20°F to 220°F) |
| | B | Nitrile (Buna N) (-20°F to 180°F) |
| | E | EPDM (-20°F to 300°F) |
| | P | PTFE (-40°F to 400°F) |
| | V | Fluoroelastomer (FKM) (-4°F to 392°F) |
| | R | Natural rubber (-49°F to 212°F) |
| **Fill Fluid** | SF | Silicone (standard) |
| | GF | Glycerin |
| | GW | Glycerin and water |
| **Instrument Connection** | 4N | 1/4” NPTF |
| | 2N | 1/2” NPTF |

Note: Confirm the orientation upon time of ordering

Not all options are available with all sensor types

Hastelloy® is a registered trademark of Haynes International, Inc.
Hypalon® is a registered trademark of DuPont Performance Elastomers

# D81 Isolation Ring

## Isolation Ring - Wafer Style (WIR)

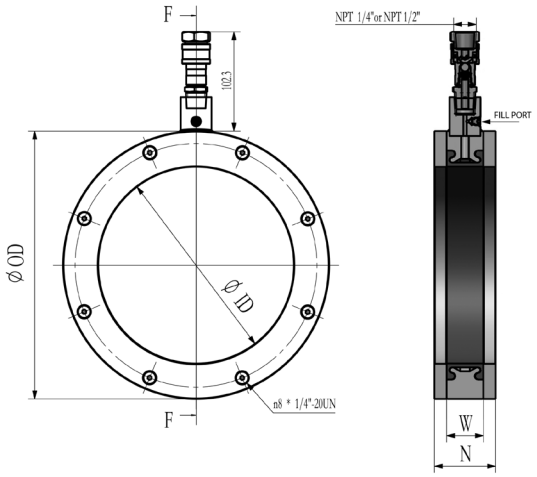


| Dimensions | | | | |
|---|---|---|---|---|
| Size | ID | OD | W | N |
| 1” | 1” | 2.5” | 1.24” | 1.87” |
| 2” | 2.07” | 4.00” | 1.50” | 2.13” |
| 3” | 3.07” | 5.25” | | |
| 4” | 4.03” | 6.75” | | |
| 6” | 5.99” | 8.63” | | 2.25” |
| 8” | 7.98” | 10.88” | | 2.50” |
| 10” | 10.02” | 13.25” | | 2.75” |
| 12” | 12.00” | 16.00” | 1.75” | 3.00” |
| 14” | 13.25” | 17.63” | | |
| 16” | 15.25” | 20.13” | | |
| 18” | 17.25” | 21.50” | | |
| 20” | 19.25” | 23.75” | | |

## Isolation Ring - Full Flange (RIR)

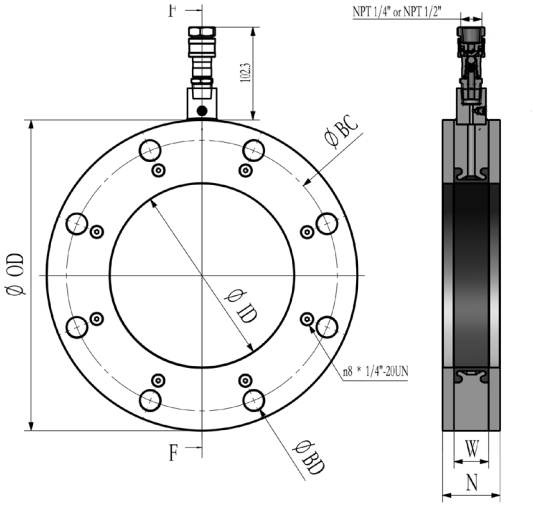


| Dimensions | | | | | | | | |
|---|---|---|---|---|---|---|---|---|
| ANSI ASME CLASS | Size | ID | OD | W | N | BC | BD | Number of Mounting Holes |
| 150# | 1” | 1” | 4.25” | 1.24” | 1.87” | 3.27” | 0.75” | 4 |
| | 2” | 2.07” | 6.00” | 1.50” | 2.13” | 4.75” | 0.75” | 4 |
| | 3” | 3.07” | 7.50” | | | 6.00” | | |
| | 4” | 4.03” | 9.00” | | | 7.50” | | 8 |
| | 6” | 6.07” | 11.00” | | 2.25” | 9.50” | 0.88” | |
| | 8” | 7.98” | 13.50” | | 2.50” | 11.75” | | |
| | 10” | 10.02” | 16.00” | | 2.75” | 14.25” | 1.00” | 12 |
| 300# | 2” | 2.07” | 6.50” | | 2.13” | 5.00” | 0.75” | 8 |
| | 3” | 3.07” | 8.25” | | | 6.62” | 0.88” | |
| | 4” | 4.03” | 10.00” | | | 7.88” | | |
| | 6” | 6.07” | 12.50” | | 2.25” | 10.62” | | 12 |
| | 8” | 7.98” | 15.00” | | 2.50” | 13.00” | 1.00” | |
| | 10” | 10.02” | 17.50” | | 2.75” | 15.25” | 1.13” | 16 |

## Isolation Ring - Threaded (SIR)

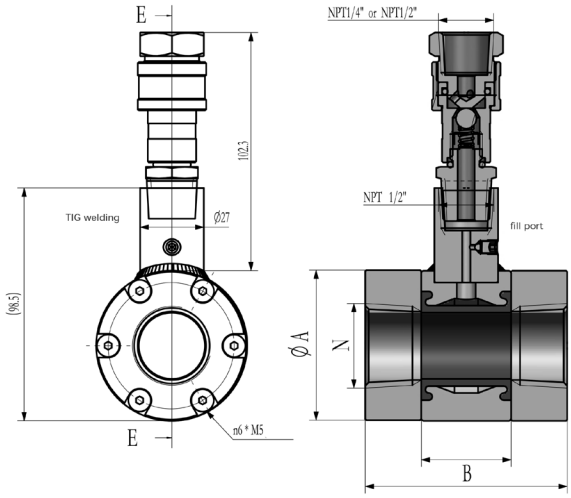


| Dimensions | | |
|---|---|---|
| Size N | A | B |
| 0.5” | 2.50” | 2.87” |
| 0.75” | | |
| 1” | | 3.37” |
| 1.5” | 3.25” | |
| 2” | 4.00” | |
| 3” | 5.25” | |
| 4” | 6.75” | 4.12” |



## WinCONNECT Order Codes

| Connection | Material | Code |
|---|---|---|
| 1/2” Process x 1/4” Instrument | Stainless Steel | FIR0400 |
| 1/2” Process x 1/2” Instrument | | FIR0200 |

# D85 In Line Flow Thru Seal

*30 to 600 psi (207 to 4,140 kPa)*



## Description & Features:

- Two piece construction
- Clean-out design allows process media to flow through the seal
- Reduces potential for process media blockages inside diaphragm housing
- ASME B40.100 compliant
- 5 year warranty

## Applications:

- Where the process fluid is corrosive or viscous and would clog instrument internals/solidify within the pressure gauge, switch or transmitter

| Specifications | |
|---|---|
| **Housing** | 316 SS |
| **Diaphragm** | 316 SS welded |
| **Construction** | Two piece construction |
| **Connection** | Instrument: 1/4", 1/2" NPTF<br>Process: 1/4", 1/2", 3/4", 1" NPTF or socket weld |
| **Process Temperature** | -22°F to 302°F (-30°C to 150°C). Other ranges are available upon request |
| **Other** | Other materials such as carbon steel are available upon request |

## Order Codes

| Lower Housing (process conn.) | Upper Housing (instrument conn.) | Code |
|---|---|---|
| 1/4" NPTF | 1/4" NPTF | D852536 |
| | 1/2" NPTF | D852537 |
| 1/4" Socket Weld | 1/4" NPTF | D852538 |
| | 1/2" NPTF | D852539 |
| 1/2" NPTF | 1/4" NPTF | D852540 |
| | 1/2" NPTF | D852541 |
| 1/2" Socket Weld | 1/4" NPTF | D852542 |
| | 1/2" NPTF | D852543 |
| 3/4" NPTF | 1/4" NPTF | D852544 |
| | 1/2" NPTF | D852545 |
| 3/4" Socket Weld | 1/4" NPTF | D852546 |
| | 1/2" NPTF | D852547 |
| 1" NPTF | 1/4" NPTF | D852690 |
| | 1/2" NPTF | D852691 |
| 1" Socket Weld | 1/4" NPTF | D852692 |
| | 1/2" NPTF | D852693 |

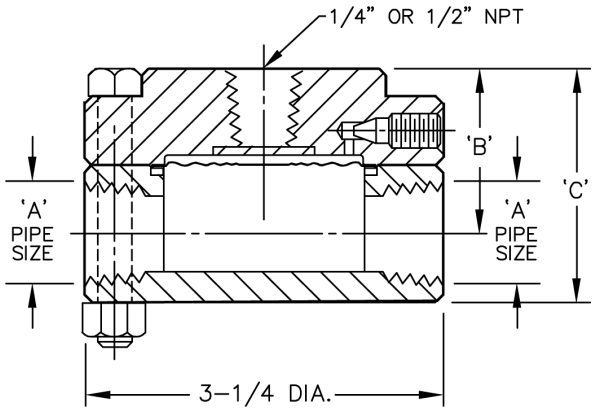


| A (NPT) | B | C |
|---|---|---|
| 1/4" | 1.25" | 1.625" |
| 1/2" | 1.5" | 2.125" |
| 3/4" | 1.625" | 2.375" |
| 1" | 1.75" | 2.625" |

**Option suffix for above order code only:**

SF-D = Silicone fill (seal only)
FL-D = Fluorolube fill (seal only)
Other fill fluids (seal only) available upon request

Larger displacement diaphragms and other materials available upon request.

# D90 Saddle Weld Seal

*30 to 600 psi (207 to 4,140 kPa)*



## Description & Features:

- Finished with a cleanout design
- Various pipe sizes 1” (25mm) to 4” (100mm) and housing materials available
- ASME B40.100 compliant
- 5 year warranty

## Applications:

- Used in industrial applications such as oil refineries, pulp and paper mills and chemical plants

| Specifications | |
|---|---|
| **Housing** | 316 SS standard.<br>Steel, nickel, 304 SS, acetal, Hastelloy® B available upon request |
| **Diaphragm** | 316 SS, Monel®, Hastelloy® C, FKM standard.<br>Nickel, PTFE, tantalum, 304 SS, acetal, Hastelloy® B available upon request |
| **Construction** | Two piece construction |
| **Connection** | 1/4”, 1/2” NPTF gauge connections standard (Other NPTF gauges connections available).<br>1” (25mm), 1.5” (40mm), 2” (50mm), 3” (75mm), 4” (100mm) pipe size standard |
| **Maximum Temperature Limit** | 450°F (232°C)<br>FKM: 350°F (176°C)<br>(Higher temperature limits available) |
| **Other** | Cleanout type for easy cleaning and calibrating |

## Order Codes

| Pipe Size | Diaphragm | Instrument Conn. | Code |
|---|---|---|---|
| 1” (25mm) | 316 SS | 1/4” | D902564 |
| | | 1/2” | D902560 |
| | Hastelloy® C | 1/4” | D902565 |
| | | 1/2” | D902561 |
| | Monel® | 1/4” | D902566 |
| | | 1/2” | D902562 |
| | FKM | 1/4” | D902570 |
| | | 1/2” | D902563 |
| 1.5” (40mm) | 316 SS | 1/4” | D902575 |
| | | 1/2” | D902571 |
| | Hastelloy® C | 1/4” | D902576 |
| | | 1/2” | D902572 |
| | Monel® | 1/4” | D902577 |
| | | 1/2” | D902573 |
| | FKM | 1/4” | D902578 |
| | | 1/2” | D902574 |
| 2” (50mm) | 316 SS | 1/4” | D902583 |
| | | 1/2” | D902579 |
| | Hastelloy® C | 1/4” | D902584 |
| | | 1/2” | D902580 |
| | Monel® | 1/4” | D902585 |
| | | 1/2” | D902581 |
| | FKM | 1/4” | D902586 |
| | | 1/2” | D902582 |

Hastelloy® is a registered trademark of Haynes International, Inc.
Monel® is a registered trademark of Inco Alloys International

# D90 Saddle Weld Seal

## Order Codes

| Pipe Size | Diaphragm | Instrument Conn. | Code |
|---|---|---|---|
| 3" (75mm) | 316 SS | 1/4" | D902595 |
| | | 1/2" | D902587 |
| | Hastelloy® C | 1/4" | D902596 |
| | | 1/2" | D902592 |
| | Monel® | 1/4" | D902597 |
| | | 1/2" | D902593 |
| | FKM | 1/4" | D902598 |
| | | 1/2" | D902594 |
| 4" (100mm) | 316 SS | 1/4" | D902695 |
| | | 1/2" | D902599 |
| | Hastelloy® C | 1/4" | D902696 |
| | | 1/2" | D902608 |
| | Monel® | 1/4" | D902697 |
| | | 1/2" | D902609 |
| | FKM | 1/4" | D902698 |
| | | 1/2" | D902694 |

Larger displacement diaphragms and pipe sizes more than 4" available upon request.

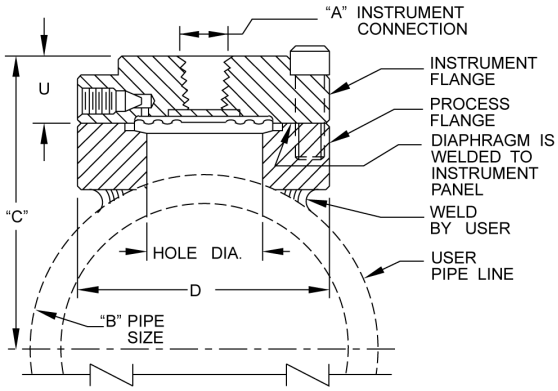


| Diaphragm Type | Instrument Connection A | Pipe Size B | C | D | U | Hole Diameter |
|---|---|---|---|---|---|---|
| Welded, std. | 1/4", 1/2" NPT | 1" | 2.13" (55mm) | 3.5" (89mm) | 0.88" (22mm) | 1" (25mm) |
| | | 1.5" | 2.38" (60mm) | | | 1.5" (38mm) |
| | | 2" | 2.63" (67mm) | | | |
| | | 3" | 3.25" (83mm) | | | |
| | | 4" | 3.81" (97mm) | | | |
| Welded, large | | 1" | 2.13" (55mm) | 4.25" (108mm) | | 1" (25mm) |
| | | 1.5" | 2.38" (60mm) | | | 1.5" (38mm) |
| | | 2" | 2.63" (67mm) | | | |
| | | 3" | 3.25" (83mm) | | | |
| | | 4" | 3.81" (97mm) | | | |
| FKM | | 1" | 2.13" (55mm) | 3.5" (89mm) | 1" (25mm) | 1" (25mm) |
| | | 1.5" | 2.38" (60mm) | | | 1.5" (38mm) |
| | | 2" | 2.63" (67mm) | | | |
| | | 3" | 3.25" (83mm) | | | |

Hastelloy® is a registered trademark of Haynes International, Inc.
Monel® is a registered trademark of Inco Alloys International

# MVA 2 - Handle Manifolds

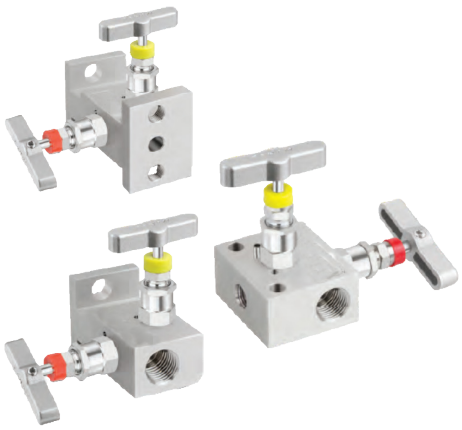

## Description & Features:

- Rugged and designed for use with differential pressure transmitters and impuse lines
- 2-handle - 1 isolation valve, 1 vent valve
- An isolation valve is located on the top, and the block and bleed are located on the side (90-degree orientation)
- Available in pipe-to-pipe, pipe-to-flange and flange-to-flange configurations
- Many variants of construction available to handle all media requirements
- Soft and Hard seat options; 6,000 psi and 10,000 psi pressure rated
- PTFE packing standard with Graphoil optional
- CRN available upon request
- 5 year warranty

## Applications:

- Manifolds are critical in process and industrial environments for the enabling of shut-downs for the testing, repair and upgrading of instruments

## Pressure vs Temperature Graph

**Manifolds 10000 (689 bar) Material SS 316**

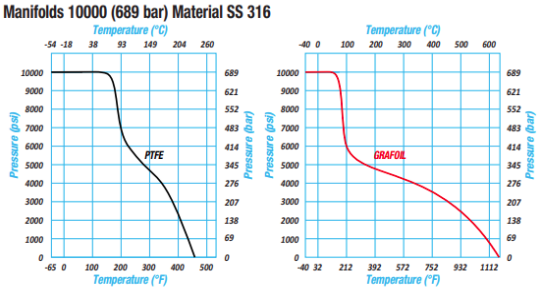


**Manifolds 6000 psi (414 bar) Material SS 316**

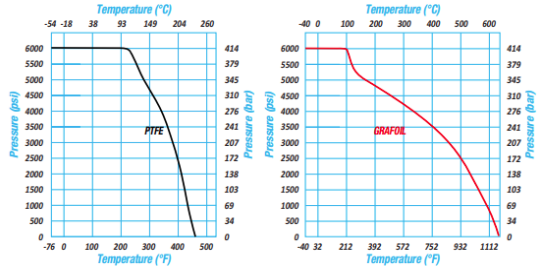


## Flow Pattern

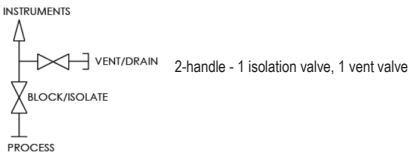


2-handle - 1 isolation valve, 1 vent valve

## Order Codes

*Other material variants available upon request, including Stainless Steel NACE for Sour Gas and Monel

| Connection | Material | Seat | Packing Material | Pressure Rating | Code |
|---|---|---|---|---|---|
| 1/2" NPT Female x 1/2" NPT Female | Stainless Steel | Soft | PTFE | 6,000 psi | MVA2SS2P |
| 1/2" NPT Female x Flange | Stainless Steel | Soft | PTFE | 6,000 psi | MVA2SS2T |
| Flange x Flange | Stainless Steel | Soft | PTFE | 6,000 psi | MVA2SS2F |
| 1/2" NPT Female x 1/2" NPT Female | Stainless Steel | Hard | PTFE | 10,000 psi | MVA2SH2P |
| 1/2" NPT Female x Flange | Stainless Steel | Hard | PTFE | 10,000 psi | MVA2SH2T |
| Direct Mount x 1/2" NPT Female | Stainless Steel | Hard | PTFE | 10,000 psi | MVA2SH2F |

**Option suffix:** G = Graphoil Packing for High Temperature
N = NACE Compliant

## Dimensions (mm)

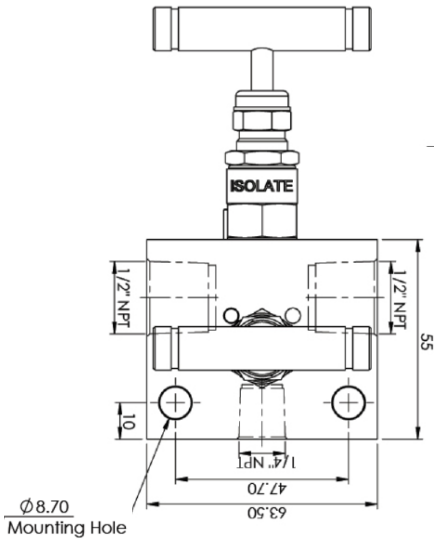


* 2-Handle Pipe-to-Pipe

## Material

| Part NO. | Description | Material |
|---|---|---|
| 1 | Body | 316SS |
| 2 | Gland Body | 316SS |
| 3 | Stem | 316SS |
| 4 | Retainer | 316SS |
| 5 | Bottom Washer | 316SS |
| 6 | Packing | PTFE |
| 7 | Vee Tip | 316SS |
| 8 | Top Washer | 316SS |
| 9 | Handle | 316SS |
| 10 | Thurst Ring | 316SS |
| 11 | Check Nut | 316SS |
| 12 | Allen Bolt | B8M |

# MVA 3 - Handle Manifolds

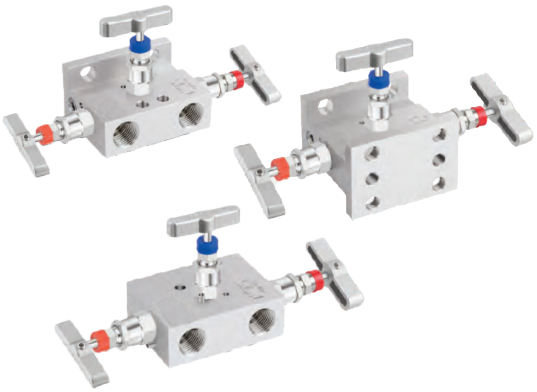

## Description & Features:

- Rugged and designed for use with differential pressure transmitters and impuse lines
- 3-handle - 2 isolation valves, 1 equalizing valve
- Available in pipe-to-pipe, pipe-to-flange and flange-to-flange configurations
- Many variants of construction available to handle all media requirements
- Soft and Hard seat options; 6,000 psi and 10,000 psi pressure rated
- PTFE packing standard with Graphoil optional
- CRN available upon request
- 5 year warranty

## Applications:

- Designed to be perfectly installed with Winters LY36 Series (with M10x45 bolts) and other differential transmitters
- Manifolds are critical in process and industrial environments for the enabling of shut-downs for the testing, repair and upgrading of instruments

## Pressure vs Temperature Graph

Manifolds 10000 (689 bar) Material SS 316

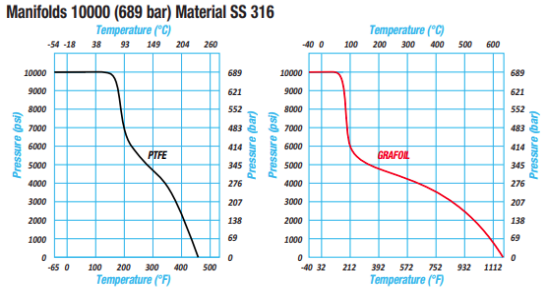


Manifolds 6000 psi (414 bar) Material SS 316

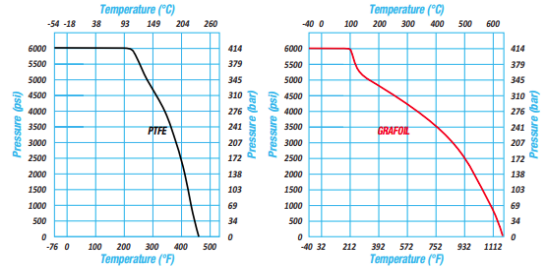


## Flow Pattern

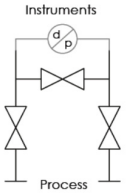


3-handle - 2 isolation valves, 1 equalizing valve

## Order Codes

*Other material variants available upon request, including Stainless Steel NACE for Sour Gas and Monel

| Connection | Material | Seat | Packing Material | Pressure Rating | Code |
|---|---|---|---|---|---|
| 1/2" NPT Female x 1/2" NPT Female | Stainless Steel | Soft | PTFE | 6,000 psi | MVA3SS2P |
| 1/2" NPT Female x Flange | Stainless Steel | Soft | PTFE | 6,000 psi | MVA3SS2T |
| Flange x Flange | Stainless Steel | Soft | PTFE | 6,000 psi | MVA3SS2F |
| 1/2" NPT Female x 1/2" NPT Female | Stainless Steel | Hard | PTFE | 10,000 psi | MVA3SH2P |
| 1/2" NPT Female x Flange | Stainless Steel | Hard | PTFE | 10,000 psi | MVA3SH2T |
| Flange x Flange | Stainless Steel | Hard | PTFE | 10,000 psi | MVA3SH2F |

**Option suffix:** G = Graphoil Packing for High Temperature
N = NACE Compliant

## Dimensions (mm)

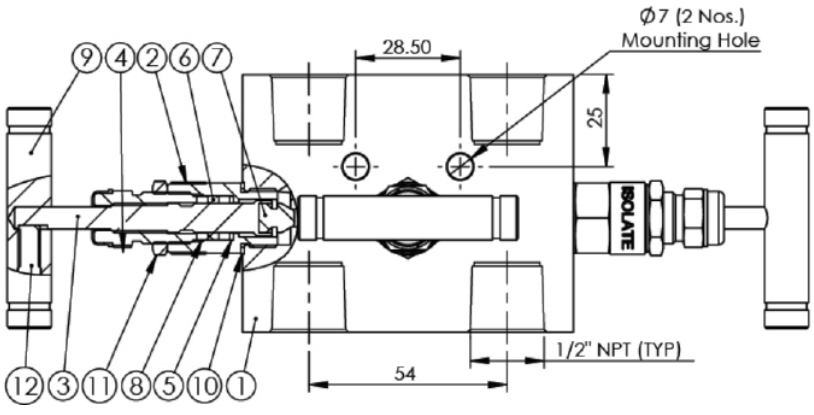


3-Handle Pipe-to-Pipe

## Material

| Part NO. | Description | Material |
|---|---|---|
| 1 | Body | 316SS |
| 2 | Gland Body | 316SS |
| 3 | Stem | 316SS |
| 4 | Retainer | 316SS |
| 5 | Bottom Washer | 316SS |
| 6 | Packing | PTFE |
| 7 | Vee Tip | 316SS |
| 8 | Top Washer | 316SS |
| 9 | Handle | 316SS |
| 10 | Thurst Ring | 316SS |
| 11 | Check Nut | 316SS |
| 12 | Allen Bolt | B8M |

# MVA 3 - Handle Direct Mount Manifolds

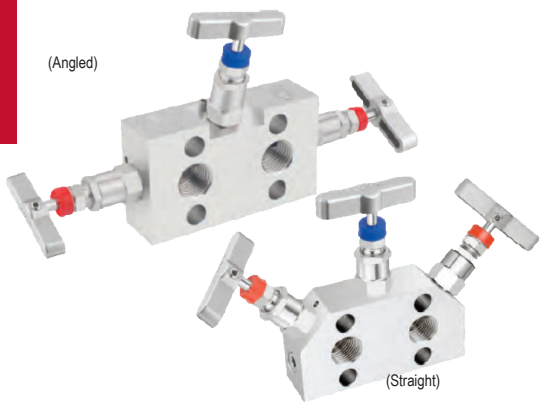


## Description & Features:

- Compact, wafer design for direct mounting
- Rugged and designed for use with differential pressure transmitters and impuse lines
- 3-handle - 2 isolation valves, 1 equalizing valve
- Straight and angled pattern to suit all installation requirements Many variants of construction available to handle all media requirements
- Soft and Hard seat options; 6,000 psi and 10,000 psi pressure rated
- PTFE packing standard with Graphoil optional
- CRN available upon request
- 5 year warranty

## Applications:

- Designed to be perfectly installed with Winters LY36 Series (with M10x45 bolts) and other differential transmitters
- Manifolds are critical in process and industrial environments for the enabling of shut-downs for the testing, repair and upgrading of instruments

## Pressure vs Temperature Graph

Manifolds 10000 (689 bar) Material SS 316

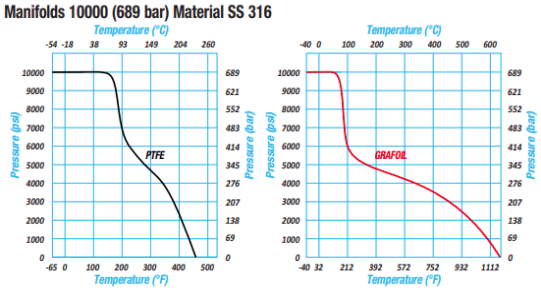


Manifolds 6000 psi (414 bar) Material SS 316

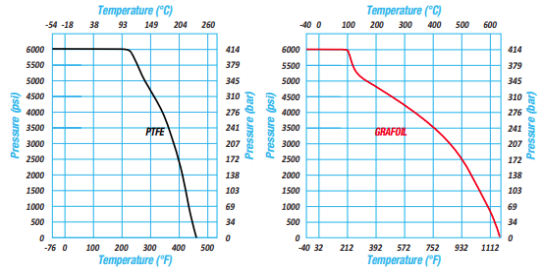


## Flow Pattern

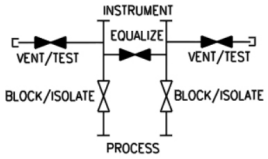


3-handle - 2 isolation valves, 1 equalizing valve

## Order Codes

*Other material variants available upon request, including Stainless Steel NACE for Sour Gas and Monel

| Connection | Handles | Material | Seat | Packing Material | Pressure Rating | Code |
|---|---|---|---|---|---|---|
| Direct Mount x 1/2" NPT Female | Straight | Stainless Steel | Soft | PTFE | 6,000 psi | MVA3SS2D |
| Direct Mount x 1/2" NPT Female | | Stainless Steel | Hard | PTFE | 10,000 psi | MVA3SH2D |
| Direct Mount x 1/2" NPT Female | | Stainless Steel | Soft | Graphoil | 6,000 psi | MVA3SS2DG |
| Direct Mount x 1/2" NPT Female | | Stainless Steel | Hard | Graphoil | 10,000 psi | MVA3SH2DG |
| Direct Mount x 1/2" NPT Female | Angled | Stainless Steel | Soft | PTFE | 6,000 psi | MVA3ASS2D |
| Direct Mount x 1/2" NPT Female | | Stainless Steel | Hard | PTFE | 10,000 psi | MVA3ASH2D |
| Direct Mount x 1/2" NPT Female | | Stainless Steel | Soft | Graphoil | 6,000 psi | MVA3ASS2DG |
| Flange x Flange | | Stainless Steel | Hard | Graphoil | 10,000 psi | MVA3ASH2DG |

**Option suffix:** N = NACE Compliant

## Dimensions (mm)

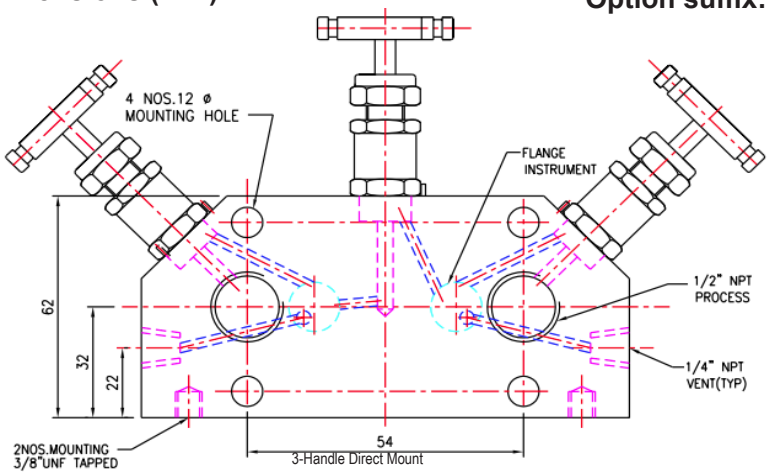


## Material

| S.NO. | Description | Material |
|---|---|---|
| 14 | Non-rotating Vee tip | 630SS |
| 13 | Washer | 316SS |
| 12 | Dust Cap | Plastic Lid |
| 11 | Lock Pin | 316SS |
| 10 | Handle | 316SS |
| 9 | Grub Screw | Steel |
| 8 | Lock Nut | 316SS |
| 7 | Spindle | 316SS |
| 6 | Packing Washer | 316SS |
| 5 | Packing | PTFE |
| 4 | Washer | 316SS |
| 3 | Gland Retainer | 316SS |
| 2 | Bonnet | 316SS |
| 1 | Body | 316SS |

# MVA 3 and 5 - Handle Manifolds

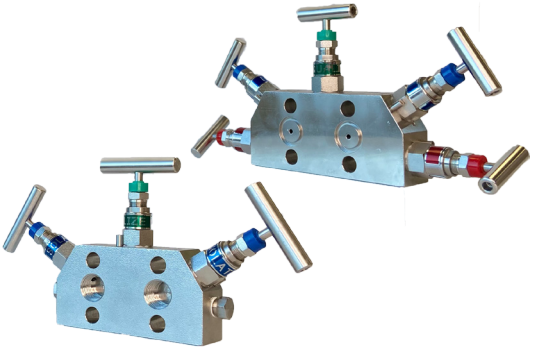

## Description & Features:

- Rugged 3 or 5 -handle manifolds are designed for use with differential pressure transmitters and impuse lines
- 1-piece 316 stainless steel body
- 3-handle - 2 isolation valves, 1 equalizing valve
- 5 - handle - 2 isolation valves, 1 equalizing valve and 2 vent valves
- PTFE packing to prevent against corrosion and seized up
- CRN Pending
- 5 year warranty

## Applications:

- Designed to be perfectly installed with Winters LY36 Series differential transmitter. Manifolds are critical in process and industrial environments for the enabling of shut-downs for the testing, repair and upgrading of instruments.

## Order Codes

| | NPT Connection | Material | Seat | Max. Pressure | Code |
|---|---|---|---|---|---|
| **3 - Handle** | 1/2" Female x 1/2" Female | Stainless Steel | Hard Set | 6,000 psi | MVA32021 |
| **5 - Handle** | 1/2" Female x 1/2" Female | Stainless Steel | Hard Set | 6,000 psi | MVA52021 |

## Dimensions (mm)

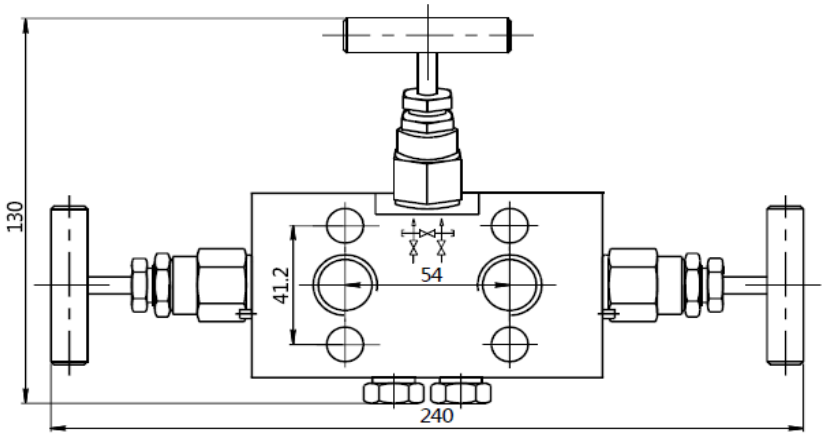


**3 - Handle Manifold**

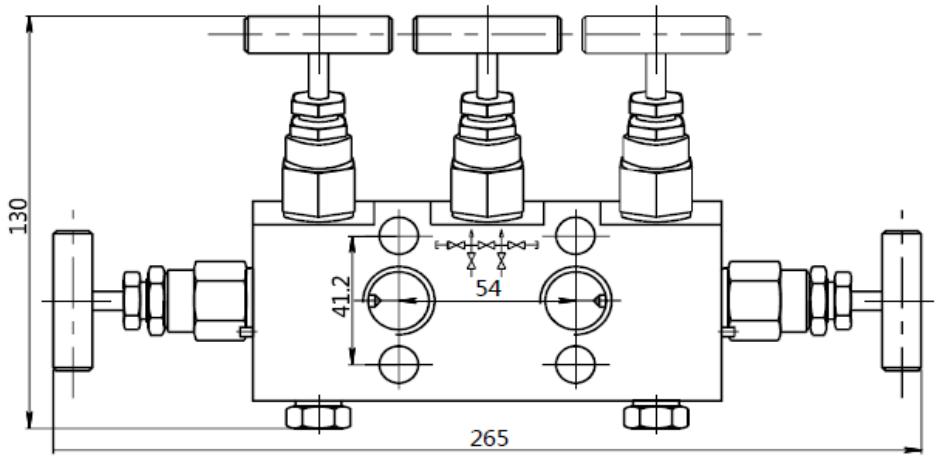


**5 - Handle Manifold**

# MVA 5 - Handle Manifolds

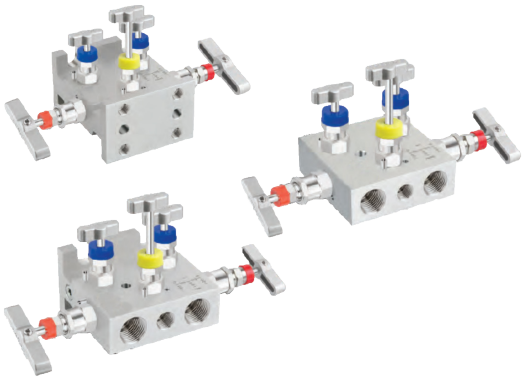

## Description & Features:

- Compact, wafer design for direct mounting
- Rugged and designed for use with differential pressure transmitters and impuse lines
- 5-handle - 2 isolation valves, 1 equalizing valve and 2 vent valves
- Available in pipe-to-pipe, pipe-to-flange and flange-to-flange configurations
- Many variants of construction available to handle all media requirements
- Soft and Hard seat options; 6,000 psi and 10,000 psi pressure rated
- PTFE packing standard with Graphoil optional
- CRN available upon request
- 5 year warranty

## Applications:

- Designed to be perfectly installed with Winters LY36 Series (with M10x45 bolts) and other differential transmitters
- Manifolds are critical in process and industrial environments for the enabling of shut-downs for the testing, repair and upgrading of instruments

## Pressure vs Temperature Graph

Manifolds 10000 (689 bar) Material SS 316

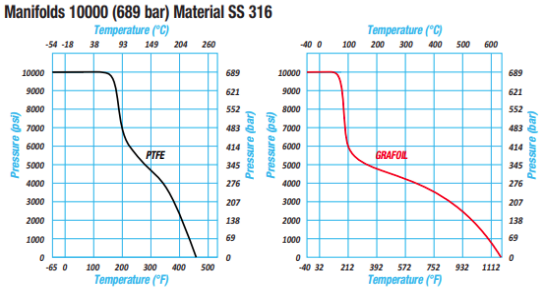


Manifolds 6000 psi (414 bar) Material SS 316

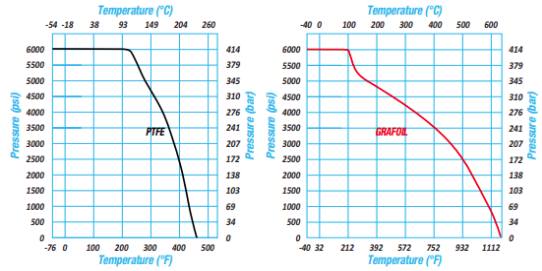


## Flow Pattern

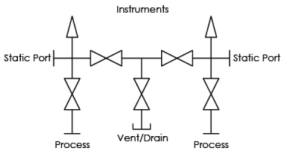


5-handle - 2 isolation valves, 1 equalizing valve and 2 vent valves

## Order Codes

*Other material variants available upon request, including Stainless Steel NACE for Sour Gas and Monel

| Connection | Material | Seat | Packing Material | Pressure Rating | Code |
|---|---|---|---|---|---|
| 1/2" NPT Female x 1/2" NPT Female | Stainless Steel | Soft | PTFE | 6,000 psi | MVA5SS2P |
| 1/2" NPT Female x Flange | Stainless Steel | Soft | PTFE | 6,000 psi | MVA5SS2T |
| Flange x Flange | Stainless Steel | Soft | PTFE | 6,000 psi | MVA5SS2F |
| 1/2" NPT Female x 1/2" NPT Female | Stainless Steel | Hard | PTFE | 10,000 psi | MVA5SH2P |
| 1/2" NPT Female x Flange | Stainless Steel | Hard | PTFE | 10,000 psi | MVA5SH2T |
| Flange x Flange | Stainless Steel | Hard | PTFE | 10,000 psi | MVA5SH2F |

## Material

| Part NO. | Description | Material |
|---|---|---|
| 1 | Body | 316F |
| 2 | Gland Body | 316SS |
| 3 | Stem | 316SS |
| 4 | Retainer | 316SS |
| 5 | Bottom Washer | 316SS |
| 6 | Packing | PTFE |
| 7 | Vee Tip | 174SS |
| 8 | Top Washer | 316SS |
| 9 | Thrust Ring | 316SS |
| 10 | Check Nut | 316SS |
| 11 | Gland Body | 316SS |
| 12 | Stem | 316SS |
| 13 | Ball | SS440C |
| 14 | Set Screw | 45H |
| 15 | Male Plug | 316SS |
| 22 | Handle | 316SS |
| 23 | Allen Bolt | B8M |
| 24 | Handle | 316SS |
| 25 | Allen Bolt | B8M |

**Option suffix:** G = Graphoil Packing for High Temperature
N - NACE Compliant

## Dimensions (mm)

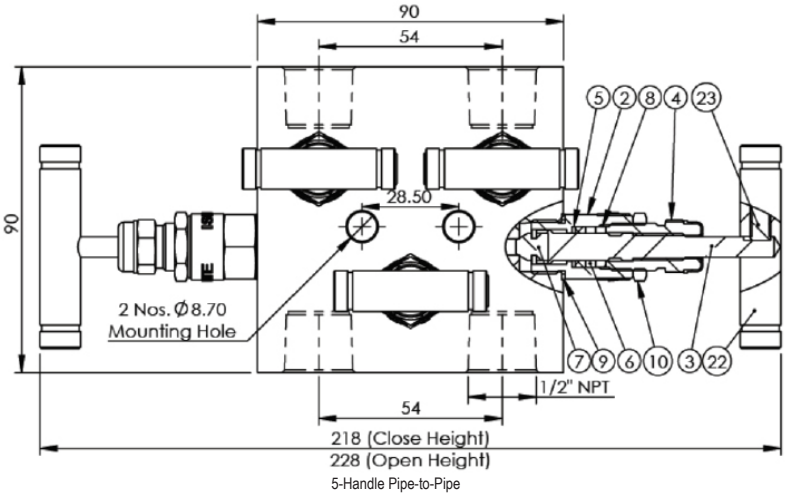


5-Handle Pipe-to-Pipe

# MVA 5 - Handle Direct Mount Manifolds

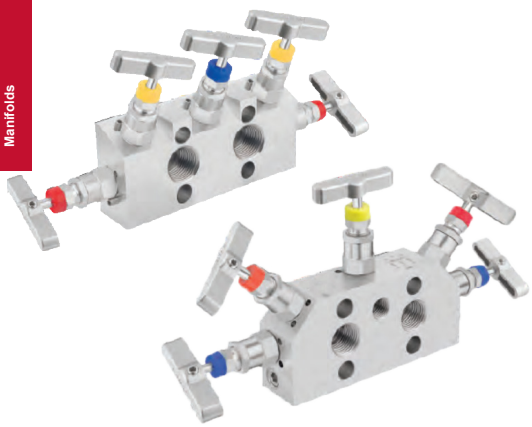

## Description & Features:

- Compact, wafer design for direct mounting
- Rugged and designed for use with differential pressure transmitters and impuse lines
- 5-handle - 2 isolation valves, 1 equalizing valve and 2 vent valves
- Straight and angled pattern to suit all installation requirements
- Many variants of construction available to handle all media requirements
- Soft and Hard seat options; 6,000 psi and 10,000 psi pressure rated
- PTFE packing standard with Graphoil optional
- CRN available upon request
- 5 year warranty

## Applications:

- Designed to be perfectly installed with Winters LY36 Series (with M10x45 bolts) and other differential transmitters
- Manifolds are critical in process and industrial environments for the enabling of shut-downs for the testing, repair and upgrading of instruments

## Pressure vs Temperature Graph

Manifolds 10000 (689 bar) Material SS 316

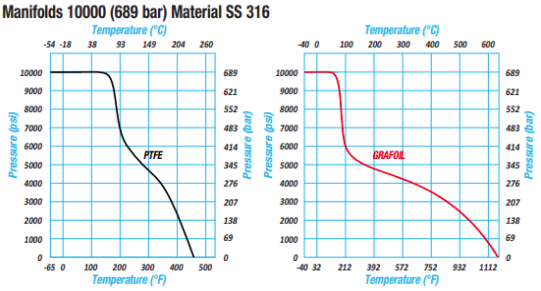


Manifolds 6000 psi (414 bar) Material SS 316

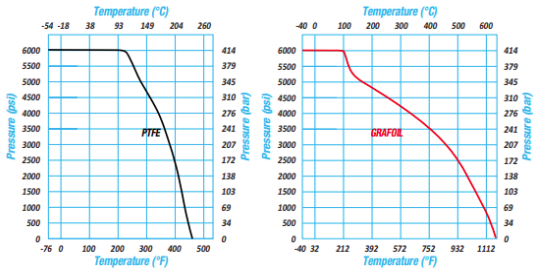


## Flow Pattern

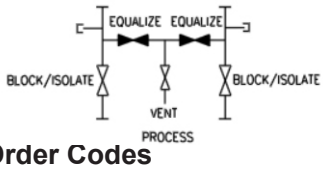


5-handle - 2 isolation valves, 1 equalizing valve and 2 vent valves

## Order Codes

*Other material variants available upon request, including Stainless Steel NACE for Sour Gas and Monel

| Connection | Handles | Material | Seat | Packing Material | Pressure Rating | Code |
|---|---|---|---|---|---|---|
| Direct Mount x 1/2" NPT Female | Straight | Stainless Steel | Soft | PTFE | 6,000 psi | MVA5SS2D |
| Direct Mount x 1/2" NPT Female | | Stainless Steel | Hard | PTFE | 10,000 psi | MVA5SH2D |
| Direct Mount x 1/2" NPT Female | | Stainless Steel | Soft | Graphoil | 6,000 psi | MVA5SS2DG |
| Direct Mount x 1/2" NPT Female | | Stainless Steel | Hard | Graphoil | 10,000 psi | MVA5SH2DG |
| Direct Mount x 1/2" NPT Female | Angled | Stainless Steel | Soft | PTFE | 6,000 psi | MVA5ASS2D |
| Direct Mount x 1/2" NPT Female | | Stainless Steel | Hard | PTFE | 10,000 psi | MVA5ASH2D |
| Direct Mount x 1/2" NPT Female | | Stainless Steel | Soft | Graphoil | 6,000 psi | MVA5ASS2DG |
| Direct Mount x 1/2" NPT Female | | Stainless Steel | Hard | Graphoil | 10,000 psi | MVA5ASH2DG |

**Option suffix:** N = NACE Compliant

## Material

| S.NO. | Description | Material |
|---|---|---|
| 14 | Non-rotating Vee tip | 630SS |
| 13 | Washer | 316SS |
| 12 | Dust Cap | Plastic Lid |
| 11 | Lock Pin | 316SS |
| 10 | Handle | 316SS |
| 9 | Grub Screw | Steel |
| 8 | Lock Nut | 316SS |
| 7 | Spindle | 316SS |
| 6 | Packing Washer | 316SS |
| 5 | Packing | PTFE |
| 4 | Washer | 316SS |
| 3 | Gland Retainer | 316SS |
| 2 | Bonnet | 316SS |
| 1 | Body | 316SS |

## Dimensions (mm)

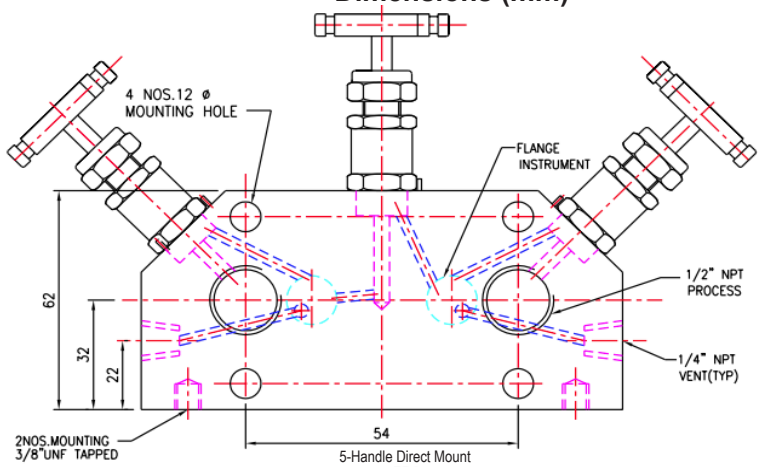


5-Handle Direct Mount

# NVA Needle Valve (Straight Body, Hard Seat)

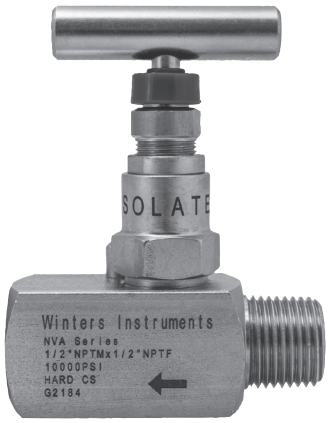


## Description & Features:

- Excellent flow regulation and leak tight
- The one-piece body construction (no welding) provides strength, safety and corrosion resistance
- "Slow opening" prevents sudden pressure surge and instrument damage
- Materials include carbon steel, carbon steel NACE, stainless steel, stainless steel NACE
- Available in Hard Seat (6,000 and 10,000 psi)
- ASME B1.20.1 compliant
- CRN registered
- 5 year warranty

## Applications:

- Highly reliable throttle and block valve for gas or liquid service in severe duty oil and gas installations including refineries and processing plants as well as water treatment plants, power plants and hydraulic applications

## Order Codes (products in bold are normally stock in North America)

| NPT Connection | Material | Max. Pressure | Code |
|---|---|---|---|
| 1/4" Female x 1/4" Female | Carbon Steel | 6,000 psi | NVA5020 |
| | | 10,000 psi | **NVA6020** |
| 1/4" Male x 1/4" Female | | 6,000 psi | NVA5000 |
| | | 10,000 psi | NVA6000 |
| 3/8" Female x 3/8" Female | | 6,000 psi | NVA5024 |
| | | 10,000 psi | NVA6024 |
| 3/8" Male x 3/8" Female | | 6,000 psi | NVA5004 |
| | | 10,000 psi | NVA6004 |
| 1/2" Female x 1/2" Female | | 6,000 psi | NVA5021 |
| | | 10,000 psi | **NVA6021** |
| 1/2" Male x 1/2" Female | | 6,000 psi | NVA5001 |
| | | 10,000 psi | NVA6001 |
| 3/4" Female x 1/2" Female | | 6,000 psi | NVA5022 |
| | | 10,000 psi | NVA6022 |
| 3/4" Male x 1/2" Female | | 6,000 psi | NVA5002 |
| | | 10,000 psi | NVA6002 |
| 3/4" Female x 3/4" Female | | 6,000 psi | NVA5025 |
| | | 10,000 psi | NVA6025 |
| 3/4" Male x 3/4" Female | | 6,000 psi | NVA5005 |
| | | 10,000 psi | NVA6005 |
| 1" Female x 1" Female | | 6,000 psi | NVA5023 |
| | | 10,000 psi | NVA6023 |
| 1" Male x 1" Female | | 6,000 psi | NVA5003 |
| | | 10,000 psi | NVA6003 |
| 1/4" Female x 1/4" Female | Stainless Steel | 6,000 psi | **NVA2020** |
| | | 10,000 psi | **NVA3020** |
| 1/4" Male x 1/4" Female | | 6,000 psi | NVA2000 |
| | | 10,000 psi | NVA3000 |
| 3/8" Female x 3/8" Female | | 6,000 psi | NVA2024 |
| | | 10,000 psi | NVA3024 |
| 3/8" Male x 3/8" Female | | 6,000 psi | NVA2004 |
| | | 10,000 psi | NVA3004 |
| 1/2" Female x 1/2" Female | | 6,000 psi | **NVA2021** |
| | | 10,000 psi | NVA3021 |
| 1/2" Male x 1/2" Female | | 6,000 psi | NVA2001 |
| | | 10,000 psi | **NVA3001** |
| 3/4" Female x 1/2" Female | | 6,000 psi | NVA2022 |
| | | 10,000 psi | NVA3022 |
| 3/4" Male x 1/2" Female | | 6,000 psi | NVA2002 |
| | | 10,000 psi | NVA3002 |
| 3/4" Female x 3/4" Female | | 6,000 psi | NVA2025 |
| | | 10,000 psi | NVA3025 |
| 3/4" Male x 3/4" Female | | 6,000 psi | NVA2005 |
| | | 10,000 psi | NVA3005 |
| 1" Female x 1" Female | | 6,000 psi | NVA2023 |
| | | 10,000 psi | NVA3023 |
| 1" Male x 1" Female | | 6,000 psi | NVA2003 |
| | | 10,000 psi | NVA3003 |

| NPT Connection | Material | Max. Pressure | Code |
|---|---|---|---|
| 1/4" Female x 1/4" Female | Carbon Steel (NACE Tip) | 6,000 psi | NVA5020N |
| | | 10,000 psi | NVA6020N |
| 1/4" Male x 1/4" Female | | 6,000 psi | NVA5000N |
| | | 10,000 psi | NVA6000N |
| 3/8" Female x 3/8" Female | | 6,000 psi | NVA5024N |
| | | 10,000 psi | NVA6024N |
| 3/8" Male x 3/8" Female | | 6,000 psi | NVA5004N |
| | | 10,000 psi | NVA6004N |
| 1/2" Female x 1/2" Female | | 6,000 psi | NVA5021N |
| | | 10,000 psi | NVA6021N |
| 1/2" Male x 1/2" Female | | 6,000 psi | NVA5001N |
| | | 10,000 psi | NVA6001N |
| 3/4" Female x 1/2" Female | | 6,000 psi | NVA5022N |
| | | 10,000 psi | NVA6022N |
| 3/4" Male x 1/2" Female | | 6,000 psi | NVA5002N |
| | | 10,000 psi | NVA6002N |
| 3/4" Female x 3/4" Female | | 6,000 psi | NVA5025N |
| | | 10,000 psi | NVA6025N |
| 3/4" Male x 3/4" Female | | 6,000 psi | NVA5005N |
| | | 10,000 psi | NVA6005N |
| 1" Female x 1" Female | | 6,000 psi | NVA5023N |
| | | 10,000 psi | NVA6023N |
| 1" Male x 1" Female | | 6,000 psi | NVA5003N |
| | | 10,000 psi | NVA6003N |
| 1/4" Female x 1/4" Female | Stainless Steel NACE | 6,000 psi | NVA2020N |
| | | 10,000 psi | NVA3020N |
| 1/4" Male x 1/4" Female | | 6,000 psi | NVA2000N |
| | | 10,000 psi | NVA3000N |
| 3/8" Female x 3/8" Female | | 6,000 psi | NVA2024N |
| | | 10,000 psi | NVA3024N |
| 3/8" Male x 3/8" Female | | 6,000 psi | NVA2004N |
| | | 10,000 psi | NVA3004N |
| 1/2" Female x 1/2" Female | | 6,000 psi | NVA2021N |
| | | 10,000 psi | NVA3021N |
| 1/2" Male x 1/2" Female | | 6,000 psi | NVA2001N |
| | | 10,000 psi | NVA3001N |
| 3/4" Female x 1/2" Female | | 6,000 psi | NVA2022N |
| | | 10,000 psi | NVA3022N |
| 3/4" Male x 1/2" Female | | 6,000 psi | NVA2002N |
| | | 10,000 psi | NVA3002N |
| 3/4" Female x 3/4" Female | | 6,000 psi | NVA2025N |
| | | 10,000 psi | NVA3025N |
| 3/4" Male x 3/4" Female | | 6,000 psi | NVA2005N |
| | | 10,000 psi | NVA3005N |
| 1" Female x 1" Female | | 6,000 psi | NVA2023N |
| | | 10,000 psi | NVA3023N |
| 1" Male x 1" Female | | 6,000 psi | NVA2003N |
| | | 10,000 psi | NVA3003N |

**Option suffix:**

CPM = Carbon steel panel mount kit SPM = Stainless steel panel mount kit

# NVA Needle Valve (Straight Body, Hard Seat)

## Material

| Description | Component Number | Carbon Steel | Carbon Steel NACE | Stainless Steel | Stainless Steel NACE |
|---|---|---|---|---|---|
| Body | 1 | Carbon Steel | Carbon Steel | 316 SS | 316 SS NACE |
| Bonnet | 2 | Carbon Steel | Carbon Steel | 316 SS | 316 SS NACE |
| Adapter Locknut | 3 | Carbon Steel | Carbon Steel | 304 SS | 304 SS |
| Adapter | 4 | 316 SS | 316 SS NACE | 316 SS | 316 SS NACE |
| Dustcap | 5 | Nylon | Nylon | Nylon | Nylon |
| Handle | 6 | Carbon Steel | Carbon Steel | 304 SS | 304 SS |
| Screw | 7 | 304 SS | 304 SS | 304 SS | 304 SS |
| Fastening Screw | 8 | 304 SS | 304 SS | 304 SS | 304 SS |
| Needle / Needle Tip | 9 | 316 SS | 316 SS NACE | 316 SS | 316 SS NACE |
| Gland Washer | 10 | Carbon Steel | Carbon Steel | 304 SS | 304 SS |
| Gland Packing | 11 | PTFE/Graphite | PTFE/Graphite | PTFE/Graphite | PTFE/Graphite |
| Dwell Pin | 12 | Carbon Steel | Carbon Steel | 304 SS | 304 SS |
| Gland Packing | 13 | PTFE/Graphite | PTFE/Graphite | PTFE/Graphite | PTFE/Graphite |

## Female x Female

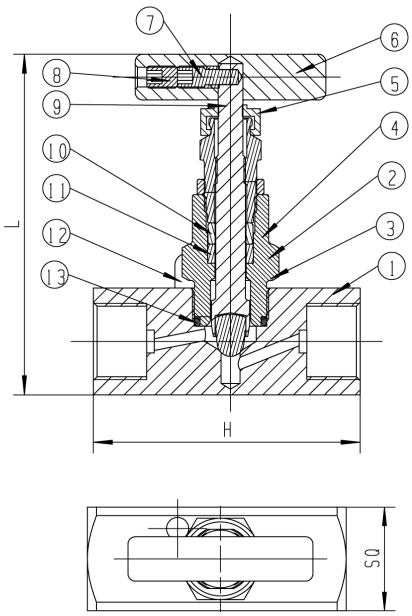


## Male x Female

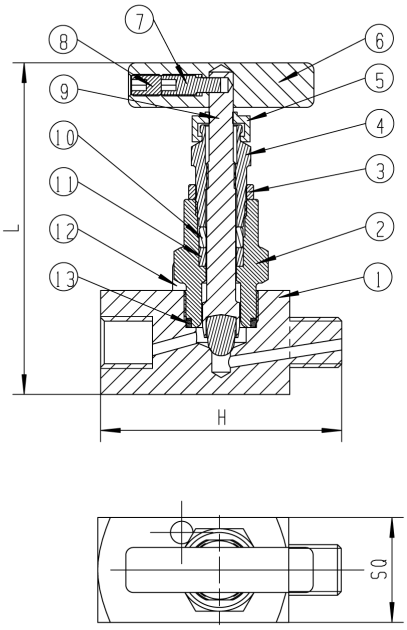


## Dimensions

| Size | H | L | SQ |
|---|---|---|---|
| 1/4” Female x 1/4” Female | 2.56” (65mm) | 3.50” (89mm) | 1.10” (28mm) |
| 1/4” Male x 1/4” Female | 2.56” (65mm) | 3.50” (89mm) | 1.10” (28mm) |
| 3/8” Female x 3/8” Female | 2.56” (65mm) | 3.50” (89mm) | 1.10” (28mm) |
| 3/8” Male x 3/8” Female | 2.56” (65mm) | 3.50” (89mm) | 1.10” (28mm) |
| 1/2” Female x 1/2” Female | 2.76” (70mm) | 3.50” (89mm) | 1.10” (28mm) |
| 1/2” Male x 1/2” Female | 2.76” (70mm) | 3.50” (89mm) | 1.10” (28mm) |
| 3/4” Female x 1/2” Female | 2.83” (72mm) | 3.66” (93mm) | 1.26” (32mm) |
| 3/4” Male x 1/2” Female | 2.83” (72mm) | 3.50” (89mm) | 1.10” (28mm) |
| 3/4” Female x 3/4” Female | 2.83” (72mm) | 3.66” (93mm) | 1.26” (32mm) |
| 3/4” Male x 3/4” Female | 2.83” (72mm) | 3.66” (93mm) | 1.26” (32mm) |
| 1” Female x 1” Female | 3.23” (82mm) | 3.98” (101mm) | 1.58” (40mm) |
| 1” Male x 1” Female | 3.23” (82mm) | 3.98” (101mm) | 1.58” (40mm) |

## Panel Mont Kit (CPM/SPM)

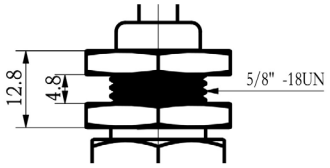

# NVA Needle Valve (Angle Body, Hard Seat)




## Description & Features:

- Excellent flow regulation and leak tight
- The one-piece body construction (no welding) provides strength, safety and corrosion resistance
- "Slow opening" prevents sudden pressure surge and instrument damage
- Material includes carbon steel, stainless steel and stainless steel NACE
- Available in Hard Seat (6,000 and 10,000 psi)
- ASME B1.20.1 compliant
- CRN registered
- 5 year warranty

## Applications:

- Ideally suited for severe duty oil and gas installations including refineries and processing plants as well as water treatment plants, power plants and hydraulic applications

## Angle Body Order Codes (products in bold are normally stock in North America)

| NPT Connection | Material | Max. Pressure | Code |
|---|---|---|---|
| 1/4" Female x 1/4" Female | Carbon Steel | 6,000 psi | NVA9030 |
| | | 10,000 psi | NVA9040 |
| 1/4" Male x 1/4" Female | | 6,000 psi | NVA8030 |
| | | 10,000 psi | NVA8040 |
| 3/8" Female x 3/8" Female | | 6,000 psi | NVA9034 |
| | | 10,000 psi | NVA9044 |
| 3/8" Male x 3/8" Female | | 6,000 psi | NVA8034 |
| | | 10,000 psi | NVA8044 |
| 1/2" Female x 1/2" Female | | 6,000 psi | NVA9031 |
| | | 10,000 psi | NVA9041 |
| 1/2" Male x 1/2" Female | | 6,000 psi | NVA8031 |
| | | 10,000 psi | NVA8041 |
| 3/4" Female x 1/2" Female | | 6,000 psi | NVA9032 |
| | | 10,000 psi | NVA9042 |
| 3/4" Male x 1/2" Female | | 6,000 psi | NVA8032 |
| | | 10,000 psi | NVA8042 |
| 3/4" Female x 3/4" Female | | 6,000 psi | NVA9035 |
| | | 10,000 psi | NVA9045 |
| 3/4" Male x 3/4" Female | | 6,000 psi | NVA8035 |
| | | 10,000 psi | NVA8045 |
| 1" Female x 1" Female | | 6,000 psi | NVA9033 |
| | | 10,000 psi | NVA9043 |
| 1" Male x 1" Female | | 6,000 psi | NVA8033 |
| | | 10,000 psi | NVA8043 |
| 1/4" Female x 1/4" Female | Stainless Steel | 6,000 psi | NVA8020 |
| | | 10,000 psi | NVA9020 |
| 1/4" Male x 1/4" Female | | 6,000 psi | NVA8000 |
| | | 10,000 psi | NVA9000 |
| 3/8" Female x 3/8" Female | | 6,000 psi | NVA8024 |
| | | 10,000 psi | NVA9024 |
| 3/8" Male x 3/8" Female | | 6,000 psi | NVA8004 |
| | | 10,000 psi | NVA9004 |
| 1/2" Female x 1/2" Female | | 6,000 psi | NVA8021 |
| | | 10,000 psi | NVA9021 |
| 1/2" Male x 1/2" Female | | 6,000 psi | NVA8001 |
| | | 10,000 psi | NVA9001 |
| 3/4" Female x 1/2" Female | | 6,000 psi | NVA8022 |
| | | 10,000 psi | NVA9022 |
| 3/4" Male x 1/2" Female | | 6,000 psi | NVA8002 |
| | | 10,000 psi | NVA9002 |
| 3/4" Female x 3/4" Female | | 6,000 psi | NVA8025 |
| | | 10,000 psi | NVA9025 |
| 3/4" Male x 3/4" Female | | 6,000 psi | NVA8005 |
| | | 10,000 psi | NVA9005 |
| 1" Female x 1" Female | | 6,000 psi | NVA8023 |
| | | 10,000 psi | NVA9023 |
| 1" Male x 1" Female | | 6,000 psi | NVA8003 |
| | | 10,000 psi | NVA9003 |

## Angle Body NACE Order Codes

| NPT Connection | Material | Max. Pressure | Code |
|---|---|---|---|
| 1/4" Female x 1/4" Female | Carbon Steel NACE | 6,000 psi | NVA9030N |
| | | 10,000 psi | NVA9040N |
| 1/4" Male x 1/4" Female | | 6,000 psi | NVA8030N |
| | | 10,000 psi | NVA8040N |
| 3/8" Female x 3/8" Female | | 6,000 psi | NVA9034N |
| | | 10,000 psi | NVA9044N |
| 3/8" Male x 3/8" Female | | 6,000 psi | NVA8034N |
| | | 10,000 psi | NVA8044N |
| 1/2" Female x 1/2" Female | | 6,000 psi | NVA9031N |
| | | 10,000 psi | NVA9041N |
| 1/2" Male x 1/2" Female | | 6,000 psi | NVA8031N |
| | | 10,000 psi | NVA8041N |
| 3/4" Female x 1/2" Female | | 6,000 psi | NVA9032N |
| | | 10,000 psi | NVA9042N |
| 3/4" Male x 1/2" Female | | 6,000 psi | NVA8032N |
| | | 10,000 psi | NVA8042N |
| 3/4" Female x 3/4" Female | | 6,000 psi | NVA9035N |
| | | 10,000 psi | NVA9045N |
| 3/4" Male x 3/4" Female | | 6,000 psi | NVA8035N |
| | | 10,000 psi | NVA8045N |
| 1" Female x 1" Female | | 6,000 psi | NVA9033N |
| | | 10,000 psi | NVA9043N |
| 1" Male x 1" Female | | 6,000 psi | NVA8033N |
| | | 10,000 psi | NVA8043N |
| 1/4" Female x 1/4" Female | Stainless Steel NACE | 6,000 psi | NVA8020N |
| | | 10,000 psi | NVA9020N |
| 1/4" Male x 1/4" Female | | 6,000 psi | NVA8000N |
| | | 10,000 psi | NVA9000N |
| 3/8" Female x 3/8" Female | | 6,000 psi | NVA8024N |
| | | 10,000 psi | NVA9024N |
| 3/8" Male x 3/8" Female | | 6,000 psi | NVA8004N |
| | | 10,000 psi | NVA9004N |
| 1/2" Female x 1/2" Female | | 6,000 psi | NVA8021N |
| | | 10,000 psi | NVA9021N |
| 1/2" Male x 1/2" Female | | 6,000 psi | NVA8001N |
| | | 10,000 psi | NVA9001N |
| 3/4" Female x 1/2" Female | | 6,000 psi | NVA8022N |
| | | 10,000 psi | NVA9022N |
| 3/4" Male x 1/2" Female | | 6,000 psi | NVA8002N |
| | | 10,000 psi | NVA9002N |
| 3/4" Female x 3/4" Female | | 6,000 psi | NVA8025N |
| | | 10,000 psi | NVA9025N |
| 3/4" Male x 3/4" Female | | 6,000 psi | NVA8005N |
| | | 10,000 psi | NVA9005N |
| 1" Female x 1" Female | | 6,000 psi | NVA8023N |
| | | 10,000 psi | NVA9023N |
| 1" Male x 1" Female | | 6,000 psi | NVA8003N |
| | | 10,000 psi | NVA9003N |

**Option suffix:**

CPM = Carbon steel panel mount kit SPM = Stainless steel panel mount kit

# NVA Needle Valve (Angle Body, Hard Seat)

## Material

| Description | Component Number | Stainless Steel | Stainless Steel NACE |
|---|---|---|---|
| Body | 1 | 316 SS | 316 SS NACE |
| Bonnet | 2 | 316 SS | 316 SS NACE |
| Dustcap | 3 | Nylon | Nylon |
| Needle / Needle Tip | 4 | 316 SS | 316 SS NACE |
| Handle | 5 | 304 SS | 304 SS |
| Screw | 6 | 304 SS | 304 SS |
| Fastening Screws | 7 | 304 SS | 304 SS |
| O-ring | 8 | FKM | FKM |
| Dwell Pin | 9 | 304 SS | 304 SS |

**Female x Female**

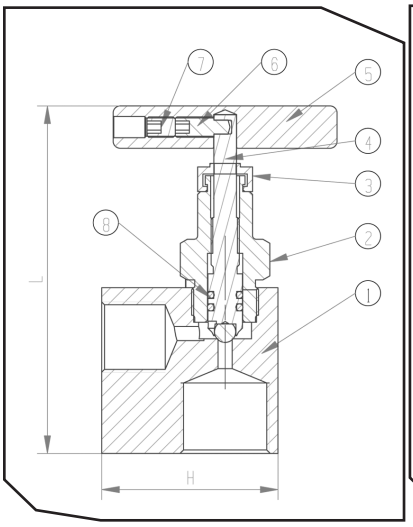


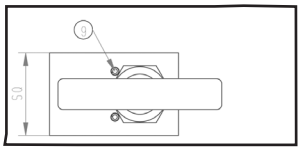


**Panel Mont Kit (CPM/SPM)**

**Male x Female**

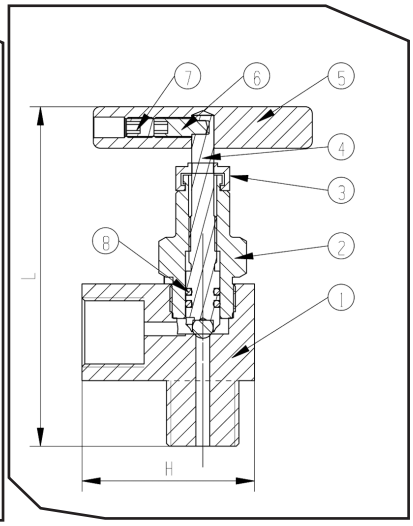


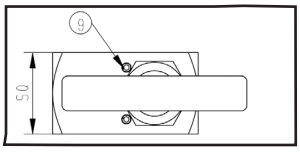


**Panel Mont Kit (CPM/SPM)**

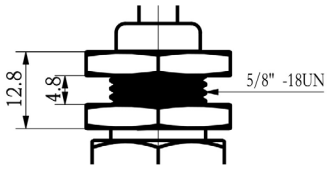


## Dimensions

| Size | H | L | SQ |
|---|---|---|---|
| 1/4" Female x 1/4" Female | 1.81" (46mm) | 3.66" (93mm) | 1.10" (28mm) |
| 1/4" Male x 1/4" Female | 1.77" (45mm) | 3.58" (91mm) | 1.10" (28mm) |
| 3/8" Female x 3/8" Female | 1.81" (46mm) | 3.66" (93mm) | 1.10" (28mm) |
| 3/8" Male x 3/8" Female | 1.77" (45mm) | 3.82" (97mm) | 1.10" (28mm) |
| 1/2" Female x 1/2" Female | 1.97" (50mm) | 3.82" (97mm) | 1.10" (28mm) |
| 1/2" Male x 1/2" Female | 1.97" (50mm) | 3.82" (97mm) | 1.10" (28mm) |
| 3/4" Female x 1/2" Female | 1.97" (50mm) | 3.82" (97mm) | 1.26" (32mm) |
| 3/4" Male x 1/2" Female | 1.97" (50mm) | 3.86" (98mm) | 1.10" (28mm) |
| 3/4" Female x 3/4" Female | 1.97" (50mm) | 3.82" (97mm) | 1.26" (32mm) |
| 3/4" Male x 3/4" Female | 1.97" (50mm) | 3.86" (98mm) | 1.26" (32mm) |
| 1" Female x 1" Female | 2.48" (63mm) | 4.41" (112mm) | 1.58" (40mm) |
| 1" Male x 1" Female | 2.48" (63mm) | 4.41" (112mm) | 1.58" (40mm) |

# NVA Needle Valve (Straight Body, Soft Seat)




## Description & Features:

- Excellent flow regulation and leak tight
- The one-piece body construction (no welding) provides strength, safety and corrosion resistance
- "Slow opening" prevents sudden pressure surge and instrument damage
- Materials include carbon steel and stainless steel
- Available in Soft Seat (6,000 psi, Delrin seat)
- ASME B1.20.1 compliant
- CRN registered
- 5 year warranty

## Applications:

- Ideally suited for severe duty oil and gas installations including refineries and processing plants, water treatment plants, power plants and hydraulic applications

## Order Codes (products in bold are normally stock in North America)

| NPT Connection | Material | Code |
|---|---|---|
| 1/4" Female x 1/4" Female | Carbon Steel | NVA4020 |
| 1/4" Male x 1/4" Female | | NVA4000 |
| 3/8" Female x 3/8" Female | | NVA4024 |
| 3/8" Male x 3/8" Female | | NVA4004 |
| 1/2" Female x 1/2" Female | | NVA4021 |
| 1/2" Male x 1/2" Female | | NVA4001 |
| 3/4" Female x 1/2" Female | | NVA4022 |
| 3/4" Male x 1/2" Female | | NVA4002 |
| 3/4" Female x 3/4" Female | | NVA4025 |
| 3/4" Male x 3/4" Female | | NVA4005 |
| 1" Female x 1" Female | | NVA4023 |
| 1" Male x 1" Female | | NVA4003 |
| 1/4" Female x 1/4" Female | Stainless Steel | **NVA1020** |
| 1/4" Male x 1/4" Female | | NVA1000 |
| 3/8" Female x 3/8" Female | | NVA1024 |
| 3/8" Male x 3/8" Female | | NVA1004 |
| 1/2" Female x 1/2" Female | | **NVA1021** |
| 1/2" Male x 1/2" Female | | NVA1001 |
| 3/4" Female x 1/2" Female | | NVA1022 |
| 3/4" Male x 1/2" Female | | NVA1002 |
| 3/4" Female x 3/4" Female | | NVA1025 |
| 3/4" Male x 3/4" Female | | NVA1005 |
| 1" Female x 1" Female | | NVA1023 |
| 1" Male x 1" Female | | NVA1003 |

## Material

| Description | Component Number | Carbon Steel | Stainless Steel |
|---|---|---|---|
| Body | 1 | Carbon Steel | 316 SS |
| Bonnet | 2 | Carbon Steel | 316 SS |
| Dustcap | 3 | Nylon | Nylon |
| Needle / Needle Tip | 4 | 316 SS | 316 SS |
| Handle | 5 | Carbon Steel | 304 SS |
| Screw | 6 | 304 SS | 304 SS |
| Fastening Screw | 7 | 304 SS | 304 SS |
| O-ring | 8 | FKM | FKM |
| Seat | 9 | Delrin | Delrin |
| Slotted Spring Pin | 10 | 304 SS | 304 SS |

## Female x Female

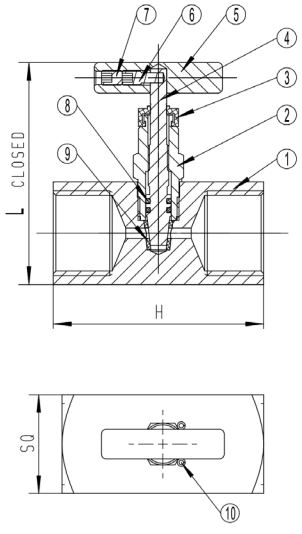


## Male x Female

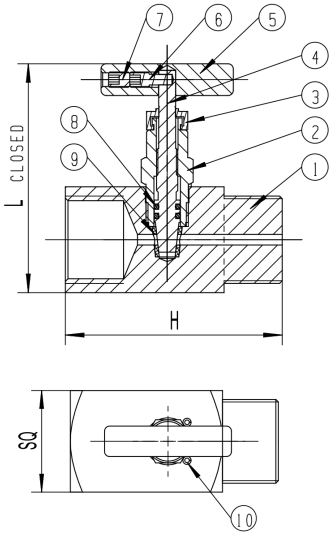


## Dimensions

| Size | H | L | SQ |
|---|---|---|---|
| 1/4" Female x 1/4" Female | 2.56" (65mm) | 2.65" (67mm) | 1.10" (28mm) |
| 1/4" Male x 1/4" Female | 2.56" (65mm) | 2.65" (67mm) | 1.10" (28mm) |
| 3/8" Female x 3/8" Female | 2.56" (65mm) | 2.65" (67mm) | 1.10" (28mm) |
| 3/8" Male x 3/8" Female | 2.56" (65mm) | 2.65" (67mm) | 1.10" (28mm) |
| 1/2" Female x 1/2" Female | 2.76" (70mm) | 2.65" (67mm) | 1.10" (28mm) |
| 1/2" Male x 1/2" Female | 2.76" (70mm) | 2.65" (67mm) | 1.10" (28mm) |
| 3/4" Female x 1/2" Female | 2.84" (72mm) | 2.80" (71mm) | 1.26" (32mm) |
| 3/4" Male x 1/2" Female | 2.84" (72mm) | 2.65" (67mm) | 1.10" (28mm) |
| 3/4" Female x 3/4" Female | 2.84" (72mm) | 2.80" (71mm) | 1.26" (32mm) |
| 3/4" Male x 3/4" Female | 2.84" (72mm) | 2.80" (71mm) | 1.26" (32mm) |
| 1" Female x 1" Female | 3.23" (82mm) | 3.12" (79mm) | 1.58" (40mm) |
| 1" Male x 1" Female | 3.23" (82mm) | 3.12" (79mm) | 1.58" (40mm) |

## Panel Mont Kit (CPM/SPM)

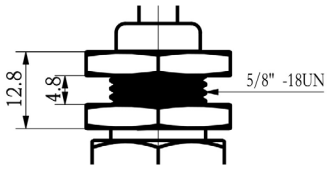


**Option suffix:**

CPM = Carbon steel panel mount kit SPM = Stainless steel panel mount kit

# NVA Needle Valve (Multiport)

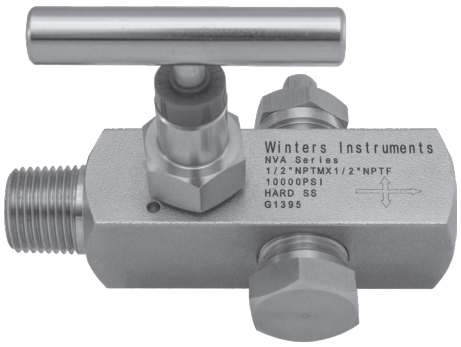


## Description & Features:

- Multiport design reduces the number of gauge and other instrument connections to permanent piping installations, decreasing possible leak paths
- Optional bleed plugs further allow pressure to be bled off without disturbing the permanent piping installation
- 10,000 psi pressure rating @ 200°F
- All stems are 316 stainless steel
- CRN registered
- 5 year warranty

## Applications:

- Ideally suited for severe duty oil and gas installations including refineries and processing plants as well as water treatment plants, power plants and hydraulic applications

### Multiport Order Codes

| NPT Connection | Material | Seat | Max. Pressure | Code |
|---|---|---|---|---|
| 1/2" Male x 1/2" Female | Carbon Steel | Soft Seat | 6,000 psi | NVA4201 |
| 3/4" Male x 1/2" Female | | | | NVA4202 |
| 1/2" Male x 1/2" Female | Stainless Steel | | | NVA1201 |
| 3/4" Male x 1/2" Female | | | | NVA1202 |
| 1/2" Male x 1/2" Female | Carbon Steel | Hard Seat | 10,000 psi | NVA6201 |
| 3/4" Male x 1/2" Female | | | | NVA6202 |
| 1/2" Male x 1/2" Female | Stainless Steel | | | NVA3201 |
| 3/4" Male x 1/2" Female | | | | NVA3202 |

### Multiport NACE Order Codes

| NPT Connection | Material | Seat | Max. Pressure | Code |
|---|---|---|---|---|
| 1/2" Male x 1/2" Female | Stainless Steel NACE | Hard Seat | 10,000 psi | NVA3201N |
| 3/4" Male x 1/2" Female | | | | NVA3202N |

### Multiport Optional Bleed Screw and Plug Order Codes

| Plug or Screw | Carbon Steel | Stainless Steel | Stainless Steel NACE |
|---|---|---|---|
| M8 Bleed Screw | NVAPLUG02 | NVAPLUG01 | NVAPLUG01N |
| 1/2" NPT Plug | NVAPLUG06 | NVAPLUG05 | NVAPLUG05N |
| 1/2" NPT Plug w/Bleed Screw | NVAPLUG08 | NVAPLUG07 | NVAPLUG07N |

Note: Bleed screw and plugs not included

# NVA Needle Valve (Multiport)

## Hard Seat Material

| Description | Component Number | Carbon Steel Hard Seat | Stainless Steel Hard Seat | Stainless Steel NACE Hard Seat |
|---|---|---|---|---|
| Body | 1 | Carbon Steel | 316 SS | 316 SS NACE |
| Bonnet | 2 | Carbon Steel | 316 SS | 316 SS NACE |
| Dustcap | 3 | Nylon | Nylon | Nylon |
| Needle / Needle Tip | 4 | 316 SS | 316 SS | 316 SS NACE |
| Handle | 5 | Carbon Steel | 304 SS | 304 SS |
| Screw | 6 | 304 SS | 304 SS | 304 SS |
| Fastening Screw | 7 | 304 SS | 304 SS | 304 SS |
| O-ring | 8 | FKM | FKM | FKM |
| Dwell Pin | 9 | 304 SS | 304 SS | 304 SS |
| Vent Plug | 10 | Carbon Steel | 316 SS | 316 SS NACE |
| Bleed Screw | 11 | Carbon Steel | 316 SS | 316 SS NACE |
| Vent Plug | 12 | Carbon Steel | 316 SS | 316 SS NACE |

## Hard Seat Dimensions

| Size | H | L | SQ1 | SQ2 |
|---|---|---|---|---|
| 1/2” Male x 1/2” Female | 4.13 (105mm) | 3.2 (81mm) | 1.42 (36mm) | 1.10 (28mm) |
| 3/4” Male x 1/2” Female | 4.29 (109mm) | 3.2 (81mm) | 1.42 (36mm) | 1.10 (28mm) |

## Male x Female

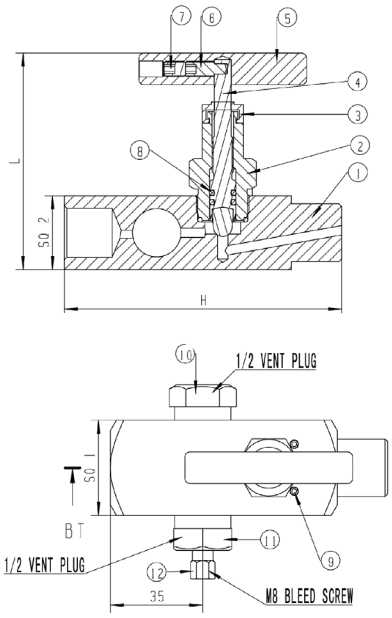


## Soft Seat Material

| Description | Component Number | Carbon Steel Soft Seat | Stainless Steel Soft Seat |
|---|---|---|---|
| Body | 1 | Carbon Steel | 316 SS |
| Bonnet | 2 | Carbon Steel | 316 SS |
| Dustcap | 3 | Nylon | Nylon |
| Needle / Needle Tip | 4 | 316 SS | 316 SS |
| Handle | 5 | Carbon Steel | 304 SS |
| Screw | 6 | 304 SS | 304 SS |
| Fastening Screw | 7 | 304 SS | 304 SS |
| O-ring | 8 | FKM | FKM |
| Seat | 9 | Delrin | Delrin |
| Dwell Pin | 10 | 304 SS | 304 SS |
| Vent Plug | 11 | Carbon Steel | 316 SS |
| Bleed Screw | 12 | Carbon Steel | 316 SS |
| Vent Plug | 13 | Carbon Steel | 316 SS |

## Soft Seat Dimensions

| Size | H | L | SQ1 | SQ2 |
|---|---|---|---|---|
| 1/2” Male x 1/2” Female | 4.13 (105mm) | 3.20” (81mm) | 1.42 (36mm) | 1.10 (28mm) |
| 3/4” Male x 1/2” Female | 4.29 (109mm) | 3.20” (81mm) | 1.42 (36mm) | 1.10 (28mm) |

## Male x Female

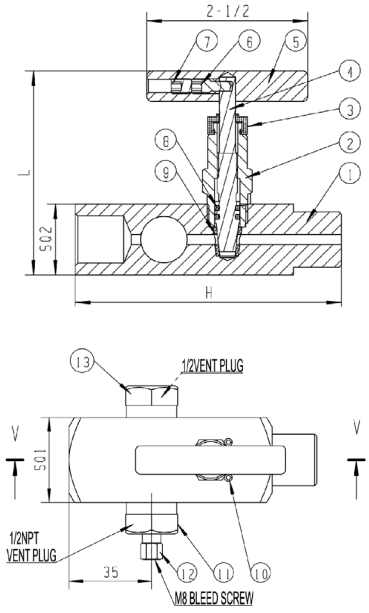

# BBV Block & Bleed Valve Single Handle




## Description & Features:

- Block & bleed design allows pressure to be bled off without disturbing the permanent piping installation, allowing quick and easy removal or replacement of instruments
- Available in Soft Seat (6,000 psi) and Hard Seat (10,000 psi)
- All stems are 316 stainless steel
- CRN registered
- 5 year warranty

## Applications:

- Ideally suited for severe duty oil and gas installations including refineries and processing plants as well as water treatment plants, power plants and hydraulic applications where venting of media is required

## Single Handle Order Codes (products in bold are normally stock in North America)

| NPT Connection | Material | Seat | Max. Pressure | Code |
|---|---|---|---|---|
| 1/4" Female x 1/4" Female | Carbon Steel | Soft Seat | 6,000 psi | BBV4020 |
| 1/4" Male x 1/4" Female | | | | BBV4000 |
| 1/2" Female x 1/2" Female | | | | BBV4021 |
| 1/2" Male x 1/2" Female | | | | BBV4001 |
| 1/4" Female x 1/4" Female | Stainless Steel | | | BBV1020 |
| 1/4" Male x 1/4" Female | | | | BBV1000 |
| 1/2" Female x 1/2" Female | | | | BBV1021 |
| 1/2" Male x 1/2" Female | | | | **BBV1001** |
| 1/4" Female x 1/4" Female | Carbon Steel | Hard Seat | 10,000 psi | BBV6020 |
| 1/4" Male x 1/4" Female | | | | BBV6000 |
| 1/2" Female x 1/2" Female | | | | BBV6021 |
| 1/2" Male x 1/2" Female | | | | BBV6001 |
| 1/4" Female x 1/4" Female | Stainless Steel | | | BBV3020 |
| 1/4" Male x 1/4" Female | | | | BBV3000 |
| 1/2" Female x 1/2" Female | | | | BBV3021 |
| 1/2" Male x 1/2" Female | | | | BBV3001 |

## Single Handle NACE Order Codes

| NPT Connection | Material | Seat | Max. Pressure | Code |
|---|---|---|---|---|
| 1/4" Female x 1/4" Female | Stainless Steel NACE | Hard Seat | 10,000 psi | BBV3020N |
| 1/4" Male x 1/4" Female | | | | BBV3000N |
| 1/2" Female x 1/2" Female | | | | BBV3021N |
| 1/2" Male x 1/2" Female | | | | BBV3001N |

## Replacement Bleed Screw Order Codes

| Plug or Screw | Carbon Steel | Stainless Steel | Stainless Steel NACE |
|---|---|---|---|
| M8 Bleed Screw | NVAPLUG02 | NVAPLUG01 | NVAPLUG01N |

# BBV Block & Bleed Valve Single Handle

## Hard Seat Material

| Description | Component Number | Carbon Steel Hard Seat | Stainless Steel Hard Seat | Stainless Steel NACE Hard Seat |
|---|---|---|---|---|
| Body | 1 | Carbon Steel | 316 SS | 316 SS NACE |
| Bonnet | 2 | Carbon Steel | 316 SS | 316 SS NACE |
| Dustcap | 3 | Nylon | Nylon | Nylon |
| Needle / Needle Tip | 4 | 316 SS | 316 SS | 316 SS NACE |
| Handle | 5 | Carbon Steel | 304 SS | 304 SS |
| Screw | 6 | 304 SS | 304 SS | 304 SS |
| Fastening Screw | 7 | 304 SS | 304 SS | 304 SS |
| O-ring | 8 | FKM | FKM | FKM |
| Dwell Pin | 9 | 304 SS | 304 SS | 304 SS |
| Bleed Screw | 10 | Carbon Steel | 316 SS | 316 SS NACE |

## Hard Seat Dimensions

| Size | H | L | SQ |
|---|---|---|---|
| 1/4" Female x 1/4" Female | 2.91" (74mm) | 3.25" (83mm) | 1.10" (28mm) |
| 1/4" Male x 1/4" Female | 2.91" (74mm) | 3.25" (83mm) | 1.10" (28mm) |
| 1/2" Female x 1/2" Female | 2.91" (74mm) | 3.25" (83mm) | 1.10" (28mm) |
| 1/2" Male x 1/2" Female | 2.91" (74mm) | 3.25" (83mm) | 1.10" (28mm) |

### Female x Female

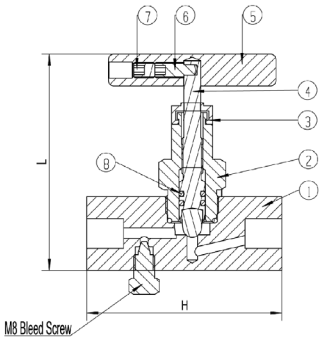


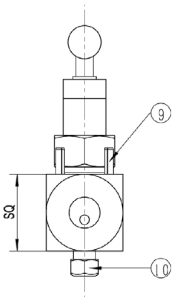


### Male x Female

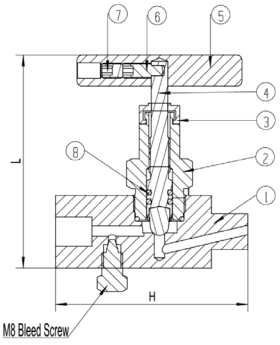


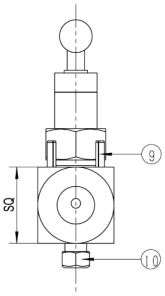


## Soft Seat Material

| Description | Component Number | Carbon Steel Soft Seat | Stainless Steel Soft Seat |
|---|---|---|---|
| Body | 1 | Carbon Steel | 316 SS |
| Bonnet | 2 | Carbon Steel | 316 SS |
| Dustcap | 3 | Nylon | Nylon |
| Needle / Needle Tip | 4 | 316 SS | 316 SS |
| Handle | 5 | Carbon Steel | 304 SS |
| Screw | 6 | 304 SS | 304 SS |
| Fastening Screw | 7 | 304 SS | 304 SS |
| O-ring | 8 | FKM | FKM |
| Seat | 9 | Delrin | Delrin |
| Dwell Pin | 10 | 304 SS | 304 SS |
| Bleed Screw | 11 | Carbon Steel | 316 SS |

## Soft Seat Dimensions

| Size | H | L | SQ |
|---|---|---|---|
| 1/4" Female x 1/4" Female | 2.91" (74mm) | 3.20" (81mm) | 1.10" (28mm) |
| 1/4" Male x 1/4" Female | 2.91" (74mm) | 3.20" (81mm) | 1.10" (28mm) |
| 1/2" Female x 1/2" Female | 2.91" (74mm) | 3.20" (81mm) | 1.10" (28mm) |
| 1/2" Male x 1/2" Female | 2.91" (74mm) | 3.20" (81mm) | 1.10" (28mm) |

### Female x Female

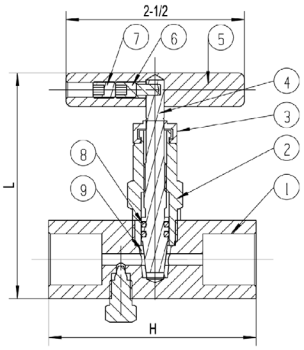


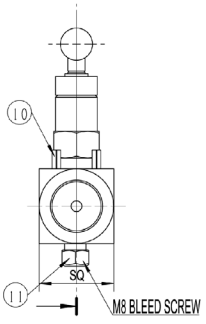


### Male x Female

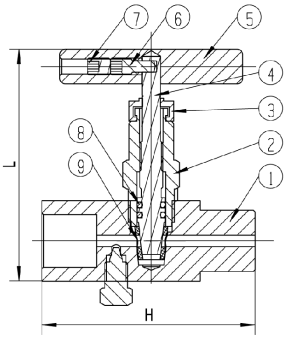


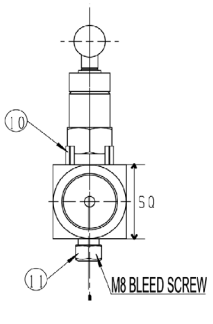

# BBV Block & Bleed Valve Single Handle

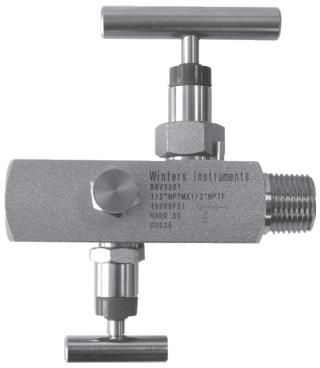

## Description & Features:

- The one-piece body construction (no welding) provides strength and corrosion resistance
- Block & bleed design allows pressure to be bled off without disturbing the permanent piping installation, allowing quick and easy removal or replacement of instruments
- Available in Soft Seat (6,000 psi) and Hard Seat (10,000 psi)
- All stems are 316 stainless steel
- CRN registered
- 5 year warranty

## Applications:

- Ideally suited for severe duty oil and gas installations including refineries and processing plants as well as water treatment plants, power plants and hydraulic applications where controlled venting of media is required

## Block & Bleed Two Handle Order Codes (products in bold are normally stock in North America)

| NPT Connection | Material | Seat | Max. Pressure | Code |
|---|---|---|---|---|
| 1/4" Female x 1/4" Female | Carbon Steel | Soft Seat | 6,000 psi | BBV4220 |
| 1/4" Male x 1/4" Female | | | | BBV4200 |
| 1/2" Female x 1/2" Female | | | | BBV4221 |
| 1/2" Male x 1/2" Female | | | | BBV4201 |
| 3/4" Female x 1/2" Female | | | | BBV4251 |
| 3/4" Male x 1/2" Female | | | | BBV4241 |
| 1/4" Female x 1/4" Female | Stainless Steel | | | BBV1220 |
| 1/4" Male x 1/4" Female | | | | BBV1200 |
| 1/2" Female x 1/2" Female | | | | **BBV1221** |
| 1/2" Male x 1/2" Female | | | | BBV1201 |
| 3/4" Female x 1/2" Female | | | | BBV1251 |
| 3/4" Male x 1/2" Female | | | | BBV1241 |
| 1/4" Female x 1/4" Female | Carbon Steel | Hard Seat | 10,000 psi | BBV6220 |
| 1/4" Male x 1/4" Female | | | | BBV6200 |
| 1/2" Female x 1/2" Female | | | | BBV6221 |
| 1/2" Male x 1/2" Female | | | | BBV6201 |
| 3/4" Female x 1/2" Female | | | | BBV6251 |
| 3/4" Male x 1/2" Female | | | | BBV6241 |
| 3/4" Female x 3/4" Female | | | | BBV6261 |
| 3/4" Male x 3/4" Female | | | | BBV6271 |
| 1/4" Female x 1/4" Female | Stainless Steel | | | BBV3220 |
| 1/4" Male x 1/4" Female | | | | BBV3200 |
| 1/2" Female x 1/2" Female | | | | BBV3221 |
| 1/2" Male x 1/2" Female | | | | **BBV3201** |
| 3/4" Female x 1/2" Female | | | | BBV3251 |
| 3/4" Male x 1/2" Female | | | | BBV3241 |
| 3/4" Female x 3/4" Female | | | | BBV3261 |
| 3/4" Male x 3/4" Female | | | | BBV3271 |

## Block & Bleed Two Handle NACE Order Codes

| NPT Connection | Material | Seat | Max. Pressure | Code |
|---|---|---|---|---|
| 1/4" Female x 1/4" Female | Stainless Steel NACE | Hard Seat | 10,000 psi | BBV3220N |
| 1/4" Male x 1/4" Female | | | | BBV3200N |
| 1/2" Female x 1/2" Female | | | | BBV3221N |
| 1/2" Male x 1/2" Female | | | | BBV3201N |
| 3/4" Female x 1/2" Female | | | | BBV3251N |
| 3/4" Male x 1/2" Female | | | | BBV3241N |

## Replacement Plug Order Codes

| Plug or Screw | Carbon Steel | Stainless Steel | Stainless Steel NACE |
|---|---|---|---|
| 1/4" NPT Plug | NVAPLUG04 | NVAPLUG03 | NVAPLUG03N |

# BBV Block & Bleed Valve Two Handles

## Hard Seat Material

| Description | Component Number | Carbon Steel Hard Seat | Stainless Steel Hard Seat | Stainless Steel NACE Hard Seat |
|---|---|---|---|---|
| Body | 1 | Carbon Steel | 316 SS | 316 SS NACE |
| Bonnet | 2 | Carbon Steel | 316 SS | 316 SS NACE |
| Dustcap | 3 | Nylon | Nylon | Nylon |
| Needle / Needle Tip | 4 | 316 SS | 316 SS | 316 SS NACE |
| Handle | 5 | Carbon Steel | 304 SS | 304 SS |
| Screw | 6 | 304 SS | 304 SS | 304 SS |
| Fastening Screw | 7 | 304 SS | 304 SS | 304 SS |
| O-rings | 8 | FKM | FKM | FKM |
| Dwell Pin | 9 | 304 SS | 304 SS | 304 SS |
| Vent Plug | 10 | Carbon Steel | 316 SS | 316 SS NACE |

Female x Female

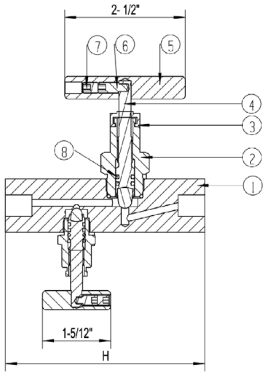


Male x Female

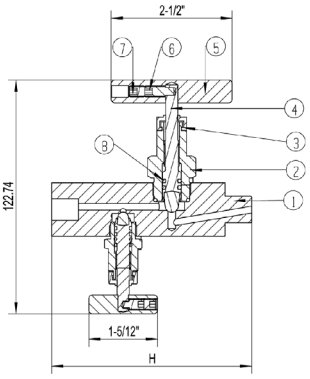


## Hard Seat Dimensions

| Size | H | L | SQ |
|---|---|---|---|
| 1/4” Female x 1/4” Female | 4.13” (105mm) | 4.83” (123mm) | 1.10” (28mm) |
| 1/4” Male x 1/4” Female | 4.13” (105mm) | 4.83” (123mm) | 1.10” (28mm) |
| 1/2” Female x 1/2” Female | 4.13” (105mm) | 4.83” (123mm) | 1.10” (28mm) |
| 1/2” Male x 1/2” Female | 4.13” (105mm) | 4.83” (123mm) | 1.10” (28mm) |
| 3/4” Female x 1/2” Female | 4.13” (105mm) | 4.99” (127mm) | 1.26” (32mm) |
| 3/4” Male x 1/2” Female | 4.29” (109mm) | 4.83” (123mm) | 1.10” (28mm) |

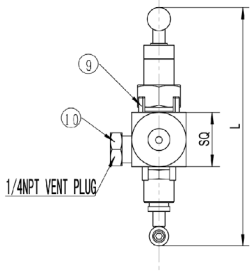


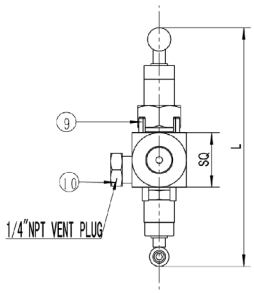


## Soft Seat Material

| Description | Component Number | Carbon Steel Soft Seat | Stainless Steel Soft Seat |
|---|---|---|---|
| Body | 1 | Carbon Steel | 316 SS |
| Bonnet | 2 | Carbon Steel | 316 SS |
| Dustcap | 3 | Nylon | Nylon |
| Needle / Needle Tip | 4 | 316 SS | 316 SS |
| Handle | 5 | Carbon Steel | 304 SS |
| Screw | 6 | 304 SS | 304 SS |
| Fastening Screw | 7 | 304 SS | 304 SS |
| O-rings | 8 | FKM | FKM |
| Seat | 9 | Delrin | Delrin |
| Dwell Pin | 10 | 304 SS | 304 SS |
| Vent Plug | 11 | Carbon Steel | 316 SS |

Female x Female

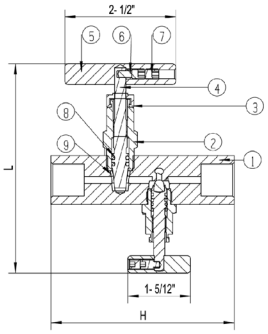


Male x Female

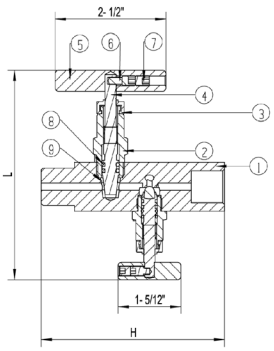


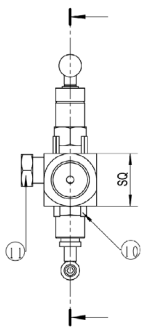


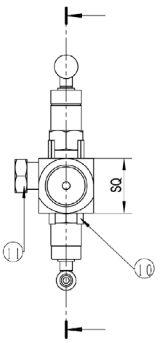


## Soft Seat Dimensions

| Size | H | L | SQ |
|---|---|---|---|
| 1/4” Female x 1/4” Female | 4.13” (105mm) | 4.72” (120mm) | 1.10” (28mm) |
| 1/4” Male x 1/4” Female | 4.13” (105mm) | 4.72” (120mm) | 1.10” (28mm) |
| 1/2” Female x 1/2” Female | 4.13” (105mm) | 4.72” (120mm) | 1.10” (28mm) |
| 1/2” Male x 1/2” Female | 4.13” (105mm) | 4.72” (120mm) | 1.10” (28mm) |
| 3/4” Female x 1/2” Female | 4.29” (109mm) | 4.88” (124mm) | 1.26” (32mm) |
| 3/4” Male x 1/2” Female | 4.29” (109mm) | 4.68” (119mm) | 1.10” (28mm) |

# BBV Double Block & Bleed Valve

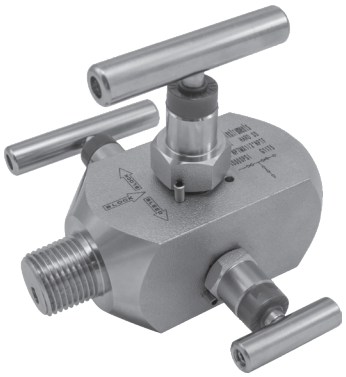

## Description & Features:

- Combines isolating and venting in a single valve, eliminating the need for tubing and fittings
- Block valve isolates the downstream process fluids, and the bleed valve exhausts upstream fluids enabling instruments to be removed without disturbing the permanent piping installation on the bottom
- The 1/4" NPT vent plug is located 90° to the left and may be removed and replaced with exhaust piping to direct the fluids to a safe location
- Available in Hard Seat (10,000 psi)
- All stems are 316 stainless steel
- CRN registered
- 5 year warranty

## Applications:

- Ideally suited for severe duty oil and gas installations including refineries and processing plants as well as water treatment plants, power plants and hydraulic applications where additional safety for shut-down and media venting is required

### Double Block & Bleed Order Codes

| NPT Connection | Material | Seat | Max. Pressure | Code |
|---|---|---|---|---|
| 1/4" Female x 1/4" Female | Stainless Steel | Hard Seat | 10,000 psi | BBV3420 |
| 1/4" Male x 1/4" Female | | | | BBV3400 |
| 1/2" Female x 1/2" Female | | | | BBV3421 |
| 1/2" Male x 1/2" Female | | | | BBV3401 |
| 3/4" Female x 1/2" Female | | | | BBV3422 |
| 3/4" Male x 1/2" Female | | | | BBV3402 |

### Double Block & Bleed NACE Order Codes

| NPT Connection | Material | Seat | Max. Pressure | Code |
|---|---|---|---|---|
| 1/4" Female x 1/4" Female | Stainless Steel NACE | Hard Seat | 10,000 psi | BBV3420N |
| 1/4" Male x 1/4" Female | | | | BBV3400N |
| 1/2" Female x 1/2" Female | | | | BBV3421N |
| 1/2" Male x 1/2" Female | | | | BBV3401N |
| 3/4" Female x 1/2" Female | | | | BBV3422N |
| 3/4" Male x 1/2" Female | | | | BBV3402N |

### Replacement Plug Order Codes

| Plug or Screw | Stainless Steel | Stainless Steel NACE |
|---|---|---|
| 1/4" NPT Plug | NVAPLUG03 | NVAPLUG03N |

# BBV Double Block & Bleed Valve

## Material

| Description | Component Number | Stainless Steel | Stainless Steel NACE |
|---|---|---|---|
| Body | 1 | 316 SS | 316 SS NACE |
| Bonnet | 2 | 316 SS | 316 SS NACE |
| Dust Cap | 3 | Nylon | Nylon |
| Needle / Needle Tip | 4 | 316 SS | 316 SS NACE |
| Handle | 5 | 304 SS | 304 SS |
| Screw | 6 | 304 SS | 304 SS |
| Fastening Screw | 7 | 304 SS | 304 SS |
| O-Rings | 8 | FKM | FKM |
| Dwell Pin | 9 | 304 SS | 304 SS |
| Plug | 10 | 316 SS | 316 SS NACE |

## Dimensions

| Size | H | L | SQ | SQ1 | M | N | P |
|---|---|---|---|---|---|---|---|
| 1/4" Female x 1/4" Female | 3.70" (94mm) | 3.72" (95mm) | 1.57" (40mm) | 1.75" (44.5mm) | 5.50" (140mm) | 2.15" (55mm) | 1.62" (41mm) |
| 1/4" Male x 1/4" Female | 4.00" (102mm) | 3.72" (95mm) | 1.57" (40mm) | 1.75" (44.5mm) | 6.10" (155mm) | 2.15" (55mm) | 1.60" (41mm) |
| 1/2" Female x 1/2" Female | 3.70" (94mm) | 3.72" (95mm) | 1.57" (40mm) | 1.75" (44.5mm) | 5.50" (140mm) | 2.15" (55mm) | 1.62" (41mm) |
| 1/2" Male x 1/2" Female | 4.00" (102mm) | 3.72" (95mm) | 1.57" (40mm) | 1.75" (44.5mm) | 6.10" (155mm) | 2.15" (55mm) | 1.60" (41mm) |
| 3/4" Female x 1/2" Female | 3.70 (94mm) | 3.72" (95mm) | 1.57" (40mm) | 1.75" (44.5mm) | 5.50" (140mm) | 2.15" (55mm) | 1.62" (41mm) |
| 3/4" Male x 1/2" Female | 4.00" (102mm) | 3.72" (95mm) | 1.57" (40mm) | 1.75" (44.5mm) | 6.10" (155mm) | 2.15" (55mm) | 1.60" (41mm) |

## Female x Female

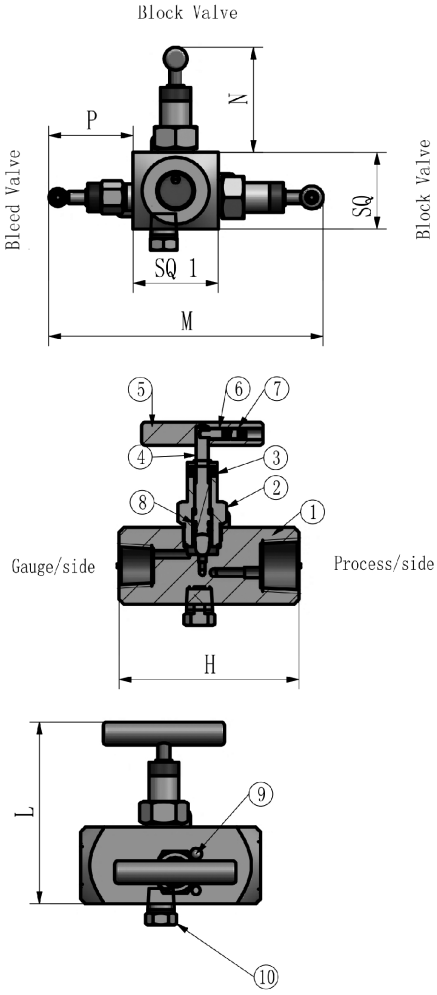


## Male x Female

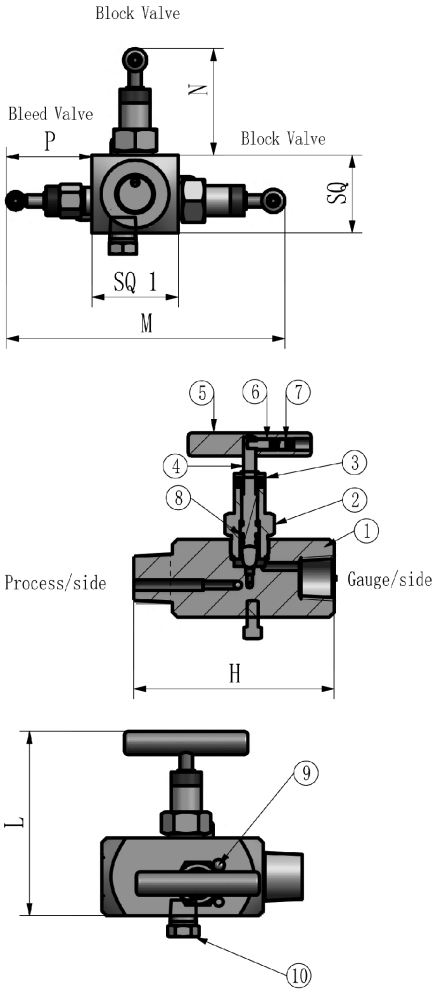

# SNV, SNV-LF | Mini Ball Valve, Lead Free Mini Ball Valve

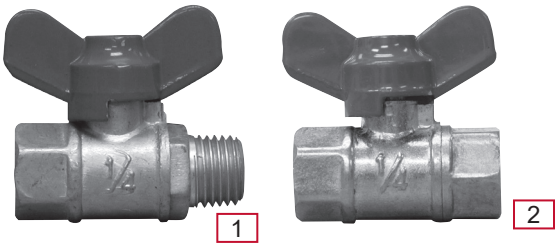


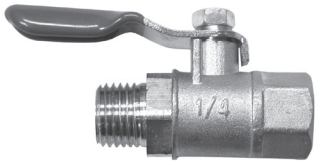


1. T-Handle Mini Ball Valve (FxM)
2. T-Handle Mini Ball Valve (FxF)
3. Lever Handle Mini Ball Valve (MXF)

LEAD FREE

## Description & Features:

- An economical isolation valve for pressure gauges and transmitters
- Brass or lead free brass wetted parts
- ASME B1.20.1 compliant
- CRN registered
- 5 year warranty

## Applications:

- Provides flow control for non-corrosive applications
- Lead free version for potable water systems

| Specifications | |
|---|---|
| **Body** | SMV: #59-1 forged brass<br>SMV-LF: Lead free forged brass |
| **Ball** | SS |
| **Gaskets** | PTFE |
| **Handle** | Steel, plated, plastic covered |
| **Process Temperature** | -9°F to 212°F (-23°C to 100°C) |
| **Maximum Operating Pressure** | 400 psi (2,758 kPa) |
| **Connection** | 1/4" NPTF x 1/4" NPTM<br>1/4" NPTF x 1/4" NPTF |
| **Warning** | **WARNING:** This product can expose you to chemicals including lead, which is known to the State of California to cause cancer and birth defects or other reproductive harm. For more information go to www.P65Warnings.ca.gov. |

## SMV Order Codes (products in bold are normally stock in North America)

| Connection | T-Handle | Lever Handle |
|---|---|---|
| F x M | **SMV532** | **SMV500** |
| F x F | **SMV533** | - |

## SMV-LF Order Codes (products in bold are normally stock in North America)

| Connection | T-Handle | Lever Handle |
|---|---|---|
| F x M | **SMV532LF** | SMV500LF |
| F x F | **SMV533LF** | - |

Other sizes and materials available upon request.

## T-Handle Mini Ball Valve (M x F)

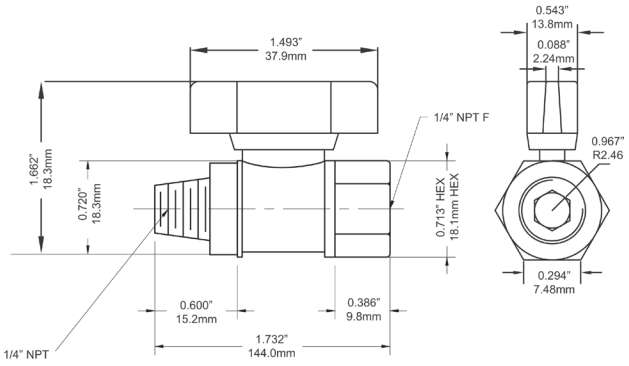


## T-Handle Mini Ball Valve (F x F)

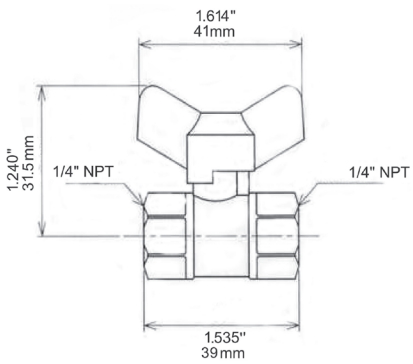


## Lever Handle Mini Ball Valve (M x F)

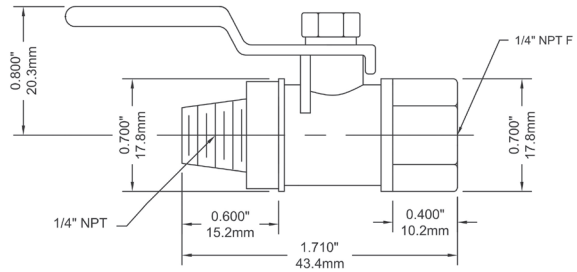

# SMV, SMV-LF | Mini Ball Valve, Lead Free Mini Ball Valve




## Description & Features:

- An isolation valve for pressure gauges and transmitters
- For mild applications, this valve can be used to throttle pulsation. Please see NVA Stainless Steel Needle Valve for more demanding applications
- Brass or lead free brass wetted parts
- ASME B1.20.1 compliant
- CRN registered
- 5 year warranty

## Applications:

- Provides precision flow control for any non-corrosive application up to 400 psi (2,758 kPa)
- Lead free version for potable water systems

| Specifications | |
|---|---|
| **Body** | SNV: #59-1 forged brass<br>SNV-LF: Lead free forged brass |
| **Handle** | ABS plastic, dyed red |
| **O-ring** | Rubber |
| **Shaft** | SNV: #59-1 brass<br>SNV-LF: Lead free brass |
| **Nut** | SNV: #59-1 brass<br>SNV-LF: Lead free brass |
| **Ambient/Process Temperature** | -9°F to 212°F (-23°C to 100°C) |
| **Maximum Operating Pressure** | 400 psi (2,758 kPa) |
| **Connection** | 1/4" NPTF |
| **Warning** | **WARNING:** This product can expose you to chemicals including lead, which is known to the State of California to cause cancer and birth defects or other reproductive harm. For more information go to www.P65Warnings.ca.gov. |
| **CV Rating** | 0.32 |

## SNV Order Codes (products in bold are normally stock in North America)

| Code |
|---|
| **SNV510** |

## SNV-LF Order Codes (products in bold are normally stock in North America)

| Code |
|---|
| **SNV510LF** |

Other sizes and materials available upon request.

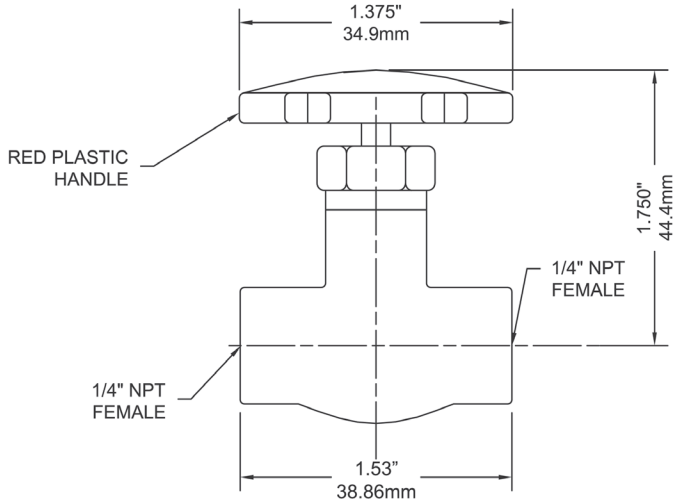

# ELECTRONIC


WINTERS
Instruments
Pressure Switch Water Proof Type
Pressure Switch Explosion Proof Type
1/2NPT
CONDUIT TORQUE

# PEC

# Premium Stainless Steel Gauge with Electrical Contacts




## Description & Features:

- 4” dial
- Silicone fillable stainless steel gauge
- Independently adjustable electrical contacts
- Bottom connection
- Restricted orifice standard
- ±1% accuracy
- Electrical contacts rated up to 1 amp at 220-380 Vac
- Contact settings adjustable with fitted key (included)
- ASME B40.100 compliant (EN837-1 available)
- CRN registered
- 5 year warranty

Applications:

- Commercial and industrial applications where electrical switching is required with local indication
- Pump and compressor controls
- Hydraulic and pneumatic industries

| Specifications | |
|---|---|
| **Case Size** | 4” (100mm) |
| **Case** | 304 SS |
| **Lens** | Polycarbonate |
| **Socket** | 316 SS |
| **Connection** | 1/2” NPT (other connection sizes available) |
| **Bourdon Tube** | 316 SS |
| **Movement** | 304 SS |
| **Pointer** | Aluminum, painted black, n.o contact pointer (painted orange)<br>n.c contact pointer (painted blue) |
| **Welding** | Laser welded case to socket |
| **Over-pressure Limit** | 25% for pressures up to 1,450 psi (9,998 kPa),<br>15% for pressures over 1,450 psi (9,998 kPa) |
| **Fill Plug** | Buna N (silicone rubber option) |
| **Lens Ring Gasket** | Silicone rubber |
| **Working Pressure** | Maximum 75% of full scale value |
| **Ambient/Process Temperature** | Dry: -40°F to 250°F (-40°C to 120°C)<br>Glycerin Filled: -4°F to 150°F (-20°C to 65°C) |
| **Accuracy** | ±1% |
| **Enclosure Rating** | IP65 |
| **Electrical Connection** | Plastic connection box with terminal block (Hirschmann-type) |
| **Contact Rating** | 0.7 - 1 amp; 220 - 380 Vac (snap action contact) |
| **No. of Contacts** | 1 or 2 SPST, independently adjustable<br>2 - contact of high (upper limit) and/or low (lower limit) |

# PEC

# Premium Stainless Steel Gauge with Electrical Contacts

## Order Codes

| Dial Size | 4” (100mm) |
|---|---|
| Connection | 1/2” Bottom |
| 30” Hg Vac/kPa | PEC0200 |
| 0/15 psi/kPa | PEC0201 |
| 0/30 psi/kPa | PEC0202 |
| 0/60 psi/kPa | PEC0203 |
| 0/100 psi/kPa | PEC0204 |
| 0/160 psi/kPa | PEC0205 |
| 0/200 psi/kPa | PEC0206 |
| 0/300 psi/kPa | PEC0207 |
| 0/400 psi/kPa | PEC0208 |
| 0/600 psi/kPa | PEC0209 |
| 0/1,000 psi/kPa | PEC0210 |
| 0/1,500 psi/kPa | PEC0211 |
| 0/2,000 psi/kPa | PEC0212 |
| 0/3,000 psi/kPa | PEC0213 |
| 0/5,000 psi/kPa | PEC0214 |
| 0/6,000 psi/kPa | PEC0215 |
| 0/10,000 psi/kPa | PEC0216 |
| 30”/0/30 psi/kPa | PEC0230 |
| 30”/0/60 psi/kPa | PEC0231 |
| 30”/0/100 psi/kPa | PEC0232 |
| 30”/0/160 psi/kPa | PEC0233 |
| 30”/0/200 psi/kPa | PEC0234 |
| 30”/0/300 psi/kPa | PEC0235 |

Other ranges and connection sizes available upon request. For scale change, refer to How to Order Guide for scale codes.

**For options, attach suffix to end of order code: i.e. PEC0210-CT4 for TEMPERED GLASS LENS**

**Option suffix:**
EN = EN837-1 compliant
SF4 = 4” (100mm) Silicone filled
ct44 = 4” (100mm) Tempered glass lens

## Wiring Diagram

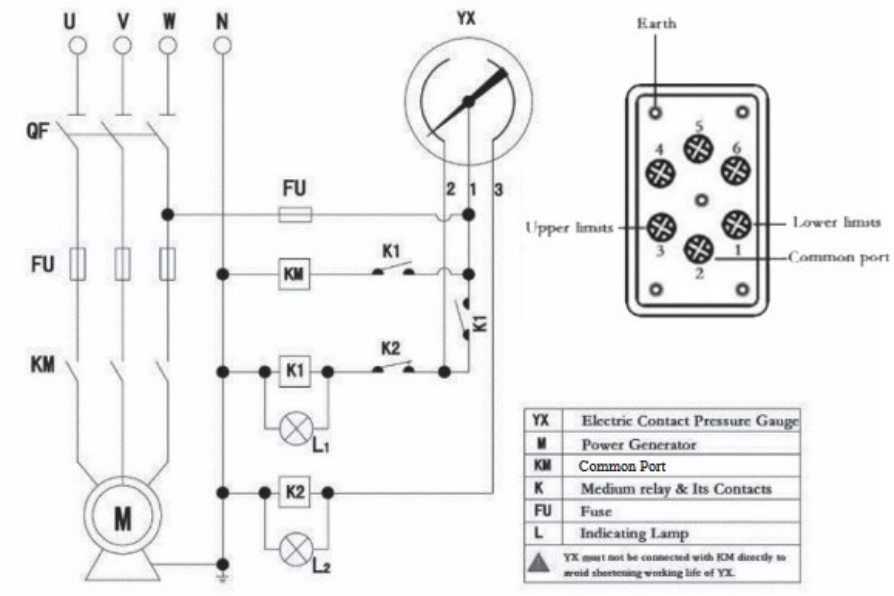


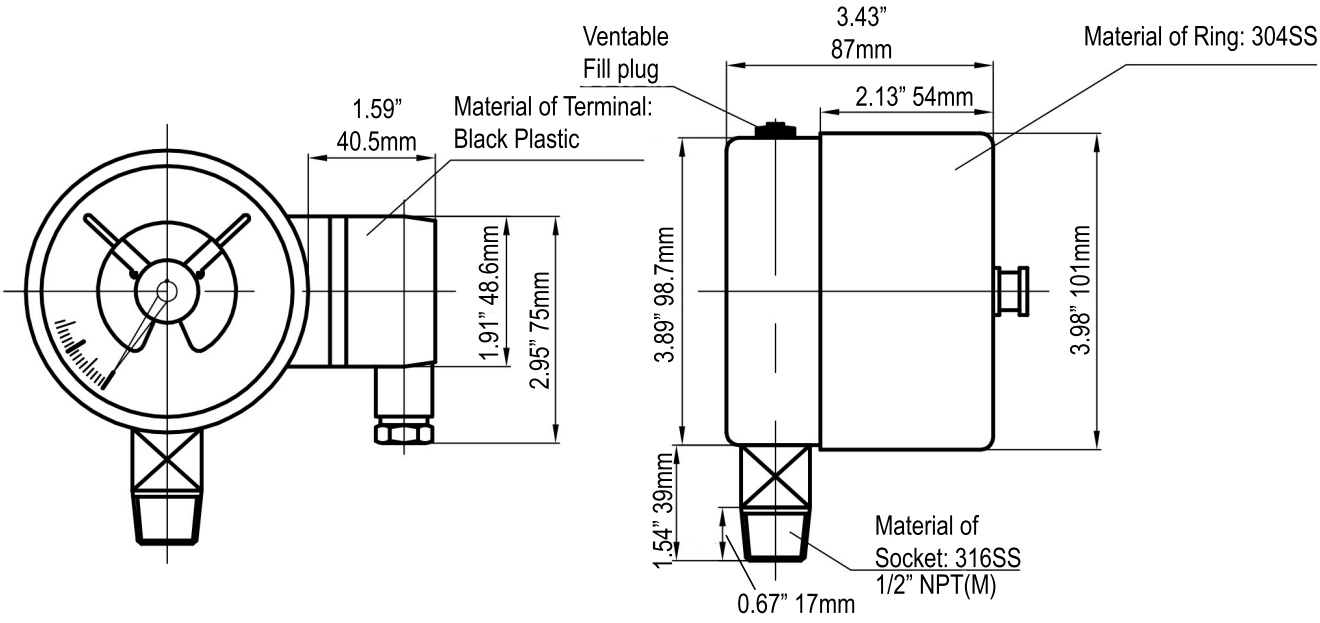

# 1WPS Compact Pressure Switch



**Description & Features:**

- Compact all purpose pressure switch
- All stainless steel housing with diaphragm or piston actuated sensor
- Wide range of electrical switching outputs
- 1 x SPDT
- IP65 standard, IP67 optional
- Built in restrictor screw to safeguard against pulsations
- 5 year warranty

**Applications:**

- Suitable for all machinery in commercial and industrial sectors

| Specifications | |
|---|---|
| Housing Material | 304L Stainless Steel |
| Accuracy | 2% of full scale |
| Pressure Connection | 1/4" NPT, G1/4", M14x1.5, M20x1.5 |
| Electrical Connection | DIN ISO, cable outlet optional |
| Wetted Parts | Diahpragm sensor - NBR<br>Piston sensor - 304L SS with NBR o-ring |
| Set Point Adjustment | Factory set or Field selectable |
| Deadband | 10-20% of setpoint (fixed) |
| Contact Rating | 2A 30VDC; 1A 42VDC; 0.15A 115VDC; 3A 42VAC; 5A 125VAC; 3A 250VAC |
| Sensor Type | Diaphragm (low pressure) or Piston (high pressure) |
| Number of Contacts | 1 X SPDT |
| Ambient / Process Temperature | -4 deg F to 185°F (-20 to 85°C) |
| Enclosure Rating | IP65 standard (DIN), IP67 optional (cable leads) |
| Vibration | 10g 10-500 Hz, MIL-STD-202F |
| Shock | 50g 11 ms, MIL-S-901C |
| Operating Life | 1 million cycles |
| Weight | 0.22 LBS (0.1 kg) |

**OrderCodes:**

| Adjustable Range psi (bar) | | Proof Pressure | DIN Connector |
|---|---|---|---|
| Min | Max | psi (bar) | 1/4" NPT |
| 3 | 10 | 4,350 (300) | 1WPSL104N |
| 3 | 15 | 4,350 (300) | 1WPSL114N |
| 3 | 30 | 4,350 (300) | 1WPSL124N |
| 7 | 70 | 4,350 (300) | 1WPSL134N |
| 7 | 120 | 4,350 (300) | 1WPSL144N |
| 15 | 200 | 4,350 (300) | 1WPSL154N |
| 15 | 250 | 4,350 (300) | 1WPSL164N |
| 30 | 300 | 4,350 (300) | 1WPSL174N |
| 50 | 500 | 14,500 (1,000) | 1WPSH184N |
| 100 | 1,000 | 14,500 (1,000) | 1WPSH194N |
| 200 | 2,000 | 14,500 (1,000) | 1WPSH204N |
| 300 | 3,000 | 14,500 (1,000) | 1WPSH214N |
| 450 | 4,000 | 14,500 (1,000) | 1WPSH224N |
| 500 | 5,000 | 14,500 (1,000) | 1WPSH234N |

# 1WPS Compact Pressure Switch

## Dimensions (mm)

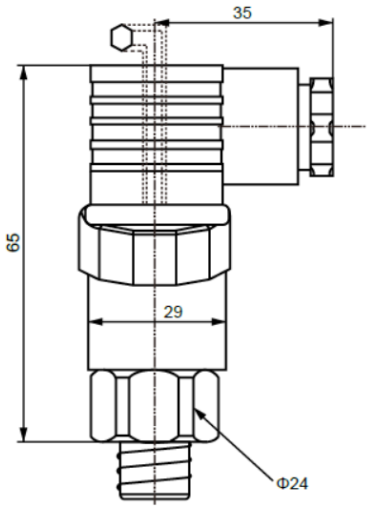


## Wiring Schematic:

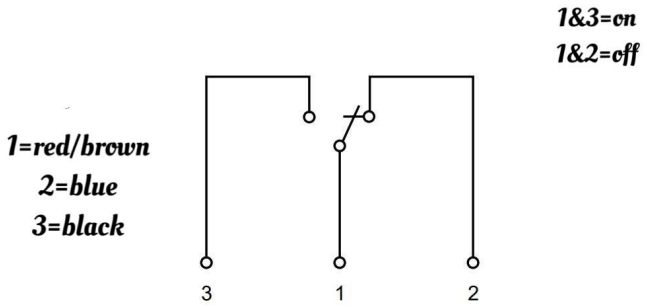


## Series Number (how to order):

| | | | 1WPS- | | - | | - | | - | | - | | - | | - | |
|---|---|---|---|---|---|---|---|---|---|---|---|---|---|---|---|---|
| SERIES | | | | | | | | | | | | | | | | |
| PRESSURE RANGE | | | | | | | | | | | | | | | | |
| (ADJUSTABLE RANGE, PSI) | Diaphragm Sensor | 3-10 | | L 1 0 | | | | | | | | | | | | |
| | Diaphragm Sensor | 3-15 | | L 1 1 | | | | | | | | | | | | |
| | Diaphragm Sensor | 3-30 | | L 1 2 | | | | | | | | | | | | |
| | Diaphragm Sensor | 7-70 | | L 1 3 | | | | | | | | | | | | |
| | Diaphragm Sensor | 7-120 | | L 1 4 | | | | | | | | | | | | |
| | Diaphragm Sensor | 14-175 | | L 1 8 | | | | | | | | | | | | |
| | Diaphragm Sensor | 15-200 | | L 1 5 | | | | | | | | | | | | |
| | Diaphragm Sensor | 15-250 | | L 1 6 | | | | | | | | | | | | |
| | Diaphragm Sensor | 30-300 | | L 1 7 | | | | | | | | | | | | |
| | Other PSI, Specify range | | | L X X | | | | | | | | | | | | |
| | Piston Sensor | 50-500 | | H 1 8 | | | | | | | | | | | | |
| | Piston Sensor | 100-1,000 | | H 1 9 | | | | | | | | | | | | |
| | Piston Sensor | 200-2,000 | | H 2 0 | | | | | | | | | | | | |
| | Piston Sensor | 300-3,000 | | H 2 1 | | | | | | | | | | | | |
| | Piston Sensor | 450-4,000 | | H 2 2 | | | | | | | | | | | | |
| | Piston Sensor | 500-5,000 | | H 2 2 | | | | | | | | | | | | |
| | Other PSI, Specify range | | | H X X | | | | | | | | | | | | |
| (ADJUSTABLE RANGE, BAR) | Diaphragm Sensor | 0.2-2.5 | | 0 0 2 | | | | | | | | | | | | |
| | Diaphragm Sensor | 0.8-5.0 | | 0 0 5 | | | | | | | | | | | | |
| | Diaphragm Sensor | 1-12 | | 0 1 2 | | | | | | | | | | | | |
| | Piston Sensor | 5-50 | | 0 5 0 | | | | | | | | | | | | |
| | Piston Sensor | 10-100 | | 1 0 0 | | | | | | | | | | | | |
| | Piston Sensor | 20-200 | | 2 0 0 | | | | | | | | | | | | |
| | Piston Sensor | 50-400 | | 4 0 0 | | | | | | | | | | | | |
| | Other BAR, Specify range | | | X X X | | | | | | | | | | | | |
| SWITCH | | | | | | | | | | | | | | | | |
| | SPDT Switch, standard | | | | | 1 C C | | | | | | | | | | |
| ELECTRICAL CONNECTION | | | | | | | | | | | | | | | | |
| | DIN ISO, IP65 | | | | | | | S 1 | | | | | | | | |
| | Cable Outlet (flying leads), IP65 | | | | | | | C 1 | | | | | | | | |
| | Cable Outlet (flying leads), IP67 factory set-point only | | | | | | | C 2 | | | | | | | | |
| WETTED PARTS | | | | | | | | | | | | | | | | |
| | Diahpragm sensor - NBR | | | | | | | | | 3 | | | | | | |
| | Piston sensor - 304L SS with NBR o-ring | | | | | | | | | 4 | | | | | | |
| MECHANICAL CONNECTION | | | | | | | | | | | | | | | | |
| | 1/4" NPT | | | | | | | | | | | 4 N | | | | |
| | G 1/4" | | | | | | | | | | | 4 G | | | | |
| | M14 * 1.5 | | | | | | | | | | | 1 4 | | | | |
| | M20 * 1.5 | | | | | | | | | | | Z M | | | | |
| PROCESS CONNECTION | | | | | | | | | | | | | | | | |
| | 304L SS | | | | | | | | | | | | | 4 | | |
| HOUSING | | | | | | | | | | | | | | | | |
| | 304L SS | | | | | | | | | | | | | | 4 | |
| OPTIONS | | | | | | | | | | | | | | | | |
| | Extra Wire (# in mm) | | | | | | | | | | | | | | | # # # # |
| | Special (Z001 -Z999) | | | | | | | | | | | | | | | Z # # # |

# 2WPS & 2WPSA
# General Purpose and Adjustable Deadband Pressure Switch




Switches with UL & CSA Recognized and File No. E12252.

## Description & Features:

- General Purpose, watertight pressure switch
- Low pressure to 4,000 psi
- High current ratings for 1 x SPDT or 2 x SPDT switches
- Fixed or adjustable deadband options
- Die cast aluminum construction with welded seal
- 1% accuracy
- NEMA 4, 4X & IP66 rated
- RU recognized (switch only)
- CRN registered
- 5 year warranty

## Applications:

- Suitable for pump and compressor monitoring, HVAC systems and general industrial applications.

| Specifications | |
|---|---|
| **Housing** | Heavy-duty die-cast aluminum, blue colour |
| **Accuracy** | +/- 1% of the adjustable set-point range |
| **Pressure Connection** | Female 1/4” or 1/2” NPT, BSP and M20xP1.5 |
| **Electrical Connection** | Female 1/2” or 3/4” NPT, M20xP1.5 |
| **Wetted Parts** | 316 Stainless Steel welded |
| **Set Point Adjustment** | Field selectable |
| **Deadband** | Fixed or Adjustable, see Order Codes below |
| **Contact Rating** | Fixed Deadband:<br>15A @ 125/250VAC, 0.4A @ 125VDC, 3A @ 30VDC<br>Gold contact microswitch 1A @ 125/250VAC<br><br>Adjustable Deadband:<br>20A @ 125/250/480VAC, 5A @ 125VDC |
| **No. of Contacts** | 1 x SPDT or 2 x SPDT (only 1 x SPDT available for Adjustable Deadband range) |
| **Ambient/Process Temperature** | -30 to 205 deg C (-22 to 400 deg F) |
| **Enclosure Rating** | NEMA 4 & 4X, IP66<br>Protection against liquid and solid ingress, suitable for indoor or outdoor use and resistant to corrosion |
| **Approvals** | RU recognized (switch only) file #E12252, CRN registered |
| **Weight** | 3.4 lbs (1.54 kg) |

# 2WPS & 2WPSA

# General Purpose and Adjustable Deadband Pressure Switch

## Order Codes

| Adjustable Range PSI | Fixed Dead Band PSI | Proof Pressure PSI | 1/2" NPT Electrical | |
|---|---|---|---|---|
| | | | 1/4" NPT Process | 1/2" NPT Process |
| 10-100 | 2.8-6.4 | 3,000 | 2WPS0106F4F201 | 2WPS0106F2F201 |
| 35-200 | 4.3-7.0 | 3,000 | 2WPS0206F4F201 | 2WPS0206F2F201 |
| 50-300 | 4.3-7.0 | 3,000 | 2WPS0306F4F201 | 2WPS0306F2F201 |
| 100-600 | 5.0-15 | 3,000 | 2WPS0606F4F201 | 2WPS0606F2F201 |
| 100-1,300 | 14.2-56.8 | 3,000 | 2WPS1306F4F201 | 2WPS1306F2F201 |
| 300-2,400 | 14.2-71 | 4,000 | 2WPS2406F4F201 | 2WPS2406F2F201 |
| 400-4,000 | 23.6-117.9 | 5,000 | 2WPS4006F4F201 | 2WPS4006F2F201 |

| Adjustable Range PSI | Adjustable Dead Band E-position PSI | Proof Pressure PSI | 1/2" NPT Electrical | |
|---|---|---|---|---|
| | | | 1/4" NPT Process | 1/2" NPT Process |
| 10-100 | 10-25 | 3,000 | 2WPSA0106F4F201 | 2WPSA0106F2F201 |
| 35-200 | 12-30 | 3,000 | 2WPSA0206F4F201 | 2WPSA0206F2F201 |
| 50-300 | 28-50 | 3,000 | 2WPSA0306F4F201 | 2WPSA0306F2F201 |
| 100-600 | 28-60 | 3,000 | 2WPSA0606F4F201 | 2WPSA0606F2F201 |
| 200-1,300 | 42-100 | 3,000 | 2WPSA1306F4F201 | 2WPSA1306F2F201 |

## Dimensions

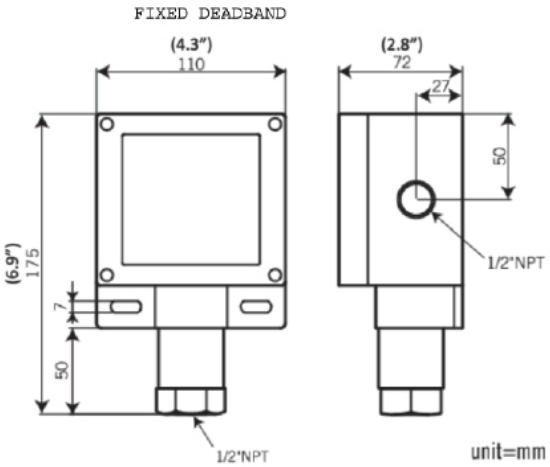


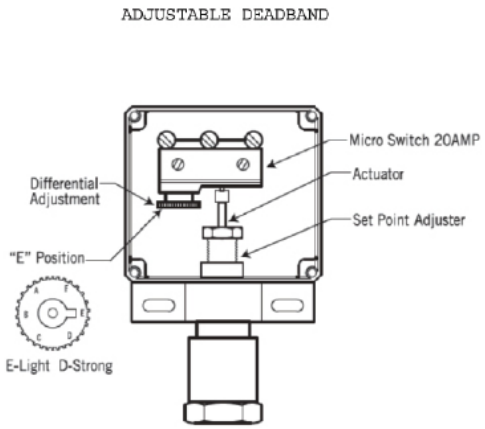


## Wiring Schematic

1 x SPDT

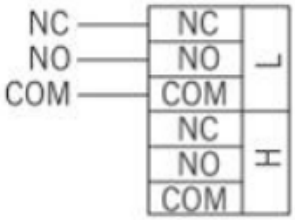


2 x SPDT

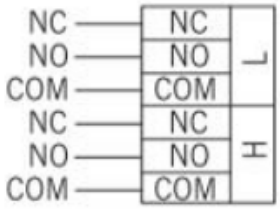

# General Purpose and Adjustable Deadband Pressure Switch

## Engineering Code (how to order)

**SERIES**

**PRESSURE RANGES (PSI)**

| | Pressure Range Min | Pressure Range Max | Deadband | Proof Pressure PSI | Code |
|---|---|---|---|---|---|
| Fixed Deadband | 10 | 100 | 2.8-6.4 | 3,000 | 0 1 0 |
| | 35 | 200 | 4.3-7.0 | 3,000 | 0 2 0 |
| | 50 | 300 | 4.3-7.0 | 3,000 | 0 3 0 |
| | 100 | 600 | 5.0-15 | 3,000 | 0 6 0 |
| | 100 | 1,300 | 14.2-56.8 | 3,000 | 1 3 0 |
| | 300 | 2,400 | 14.2-71 | 4,000 | 2 4 0 |
| | 400 | 4,000 | 23.6-117.9 | 5,000 | 4 0 0 |
| Adjustable Deadband | 10 | 100 | 10-25 | 3,000 | 0 1 0 |
| | 35 | 200 | 12-30 | 3,000 | 0 2 0 |
| | 50 | 300 | 28-50 | 3,000 | 0 3 0 |
| | 100 | 600 | 28-60 | 3,000 | 0 6 0 |
| | 200 | 1,300 | 42-100 | 3,000 | 1 3 0 |

2WPS - [ ][ ][ ] - [ ] - [ ][ ] - [ ][ ] - [ ][ ] - [ ] - [ ][ ][ ][ ]

2WPSA - [ ][ ][ ] - [ ] - [ ][ ] - [ ][ ] - [ ][ ] - [ ] - [ ][ ][ ][ ]

**WETTED PARTS**

316 Stainless Steel, diaphragm welded (standard) — 6

**PROCESS CONNECTION**

| | |
|---|---|
| 1/2" NPT Female | F 2 |
| 1/4" NPT Female | F 4 |
| 1/2" BSP Female | B 2 |
| 1/4" BSP Female | B 4 |
| 1/2" PT Female | P 2 |
| 1/4" PT Female | P 4 |
| M20 X P1.5 | M 2 |

**CONDUIT CONNECTION**

| | |
|---|---|
| 3/4" NPT Female | F 3 |
| 1/2" NPT Female (standard) | F 2 |
| M20 X P1.5 | M 2 |

**SWITCH TYPE**

| | |
|---|---|
| Micro Switch, 1 x SPDT | 0 1 |
| Micro Switch, 2 x SPDT (one setpoint), *not available for Adjustable Deadband* | 0 2 |
| Gold Contact, 1 x SPDT, *not available for Adjustable Deadband* | 3 A |
| Gold Contact, 2 x SPDT (one setpoint), *not available for Adjustable Deadband* | 3 B |

**OPTIONS**

| | |
|---|---|
| Custom Pressure Scale (R1=psi, R2=kPa, R3=kg/cm2, R4=cmH2O, R5=ftH2O, R6=inHg, R7=mmHg, R8=inH2O, R9=ozIN2, R10=ATM, R11=bar, R12=mbar, R13=MPa, R14=mH2O, R15=mmH2O, R16=Pa) | R X X X |
| Customer Specific (Numbers from Z01 to Z999) | Z # # # |

# 3WPS & 3WPSV Vacuum and Low Pressure Switch




Switches with UL & CSA Recognized and File No. E12252.

CRN CANADIAN REGISTRATION NUMBER

## Description & Features:

- General Purpose, watertight pressure switch
- Vacuum pressure to 10 psi
- High current ratings for 1 x SPDT or 2 x SPDT switches
- Fixed deadband
- Die cast aluminum construction with welded seal
- 1% accuracy
- NEMA 4 & 4X, IP66 rated
- RU recognized (switch only), file no E12252
- CRN registered
- 5 year warranty

## Applications:

- Suitable for pump and compressor monitoring, HVAC systems and general industrial applications

| Specifications | |
|---|---|
| **Housing** | Heavy-duty die-cast aluminum, blue colour |
| **Accuracy** | +/- 1% of the adjustable set-point range |
| **Pressure Connection** | 1/2” NPT, BSP and M20xP1.5 |
| **Electrical Connection** | Female 1/2” or 3/4” NPT, M20xP1.5 |
| **Wetted Parts** | 316 Stainless Steel welded (except for Vacuum range, Viton o-ring) |
| **Set Point Adjustment** | Field selectable |
| **Deadband** | Fixed, see Order Codes |
| **Contact Rating** | 15A @ 125/250VAC, 0.4A @ 125VDC, 3A @ 30VDC<br>Gold contact microswitch 1A @ 125/250VAC |
| **No. of Contacts** | 1 x SPDT or 2 x SPDT |
| **Ambient Temperature** | -30 to 205 deg C (-22 to 400 deg F), Vacuum range only -5 to 150 deg C (23 to 300 deg F) |
| **Enclosure Rating** | NEMA 4 & 4X, IP66<br>Protection against liquid and solid ingress, suitable for indoor or outdoor use and resistant to corrosion |
| **Approvals** | RU recognized, file #E12252 (switch only)<br>CRN registered |
| **Weight** | 3.35 lbs (1.52 kg) |

## Order Codes

| Adjustable Range PSI | Dead Band PSI | Proof Pressure PSI | 1/2” NPT Electrical | |
|---|---|---|---|---|
| | | | 1/4” NPT Process | 1/2” NPT Process |
| -25 to -760 mmHg (-1.0 to -30” Hg) | 10-20 mmHg (0.39 to 0.79” Hg) | 1,000 | 3WPSV1306F4F201 | 3WPSV1306F2F201 |
| 0.05-1.8 | 0.015-0.3 | 500 | 3WPS0016F4F201 | 3WPS0016F2F201 |
| 0.4-2.8 | 0.2-0.5 | 500 | 3WPS0106F4F201 | 3WPS0106F2F201 |
| 0.4-5.0 | 0.3-0.6 | 500 | 3WPS0206F4F201 | 3WPS0206F2F201 |
| 1.6-9.8 | 0.3-0.8 | 500 | 3WPS0306F4F201 | 3WPS0306F2F201 |

# Vacuum and Low Pressure Switch



## Dimensions

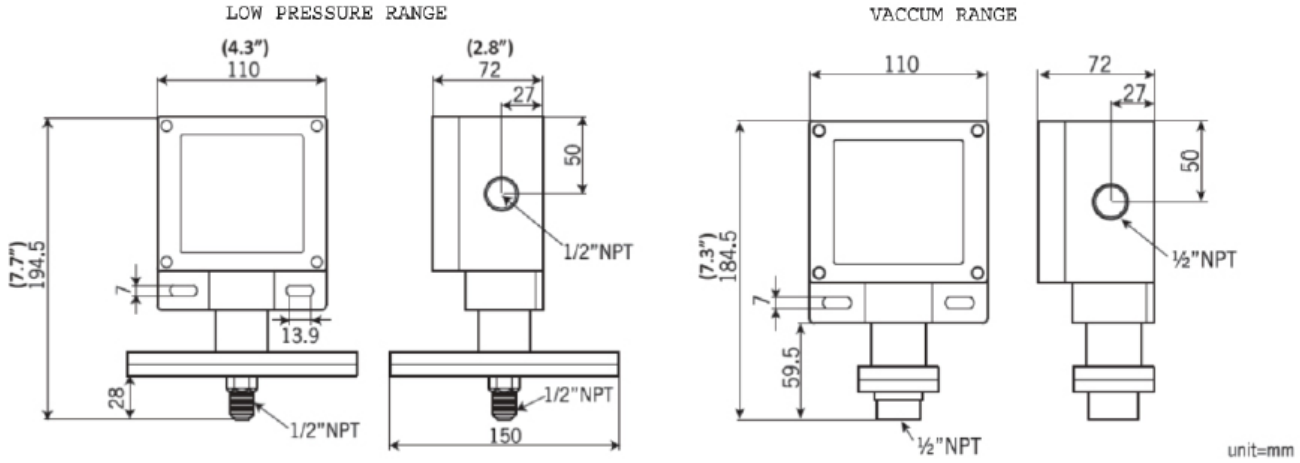


## Engineering Code (how to order)

| | | |

# 4WPS & 4WPSA

# Medium Pressure and Adjustable Deadband Pressure Switch




Switches with UL & CSA Recognized and File No. E12252.

CRN CANADIAN REGISTRATION NUMBER

## Description & Features:

- General Purpose, watertight pressure switch
- Low pressure to 100 psi
- High current ratings for 1 x SPDT or 2 x SPDT switches
- Fixed or adjustable deadband options
- Die cast aluminum construction with welded seal
- 1% accuracy
- NEMA 4, 4X & IP66 rated
- RU recognized (switch only), file no E12252
- CRN registered
- 5 year warranty

## Applications:

- Suitable for pump & compressor monitoring in HVAC and general industrial applications

| Specifications | |
|---|---|
| **Housing** | Heavy-duty die-cast aluminum, blue colour |
| **Accuracy** | +/- 1% of the adjustable set-point range |
| **Pressure Connection** | Female 1/4” or 1/2” NPT, BSP and M20xP1.5 |
| **Electrical Connection** | Female 1/2” or 3/4” NPT, M20xP1.5 |
| **Wetted Parts** | 316 Stainless Steel welded |
| **Set Point Adjustment** | Field selectable |
| **Deadband** | Fixed or Adjustable, see Order Codes |
| **Contact Rating** | Fixed Deadband:<br>15A @ 125/250VAC, 0.4A @ 125VDC, 3A @ 30VDC<br>Gold contact microswitch 1A @ 125/250VAC<br><br>Adjustable Deadband:<br>20A @ 125/250/480VAC, 5A @ 125VDC |
| **No. of Contacts** | 1 x SPDT or 2 x SPDT (only 1 x SPDT available for Adjustable Deadband range) |
| **Ambient/Process Temperature** | -30 to 205 deg C (-22 to 400 deg F) |
| **Enclosure Rating** | NEMA 4 & 4X, IP66<br>Protection against liquid and solid ingress, suitable for indoor or outdoor use and resistant to corrosion |
| **Approvals** | RU recognized, file no E12252 (switch only)<br>CRN registered |
| **Weight** | 3.35 lbs (1.52 kg) |

# Medium Pressure and Adjustable Deadband Pressure Switch



| Adjustable Range PSI | Fixed Dead Band PSI | Proof Pressure PSI | 1/2" NPT Electrical | |
|---|---|---|---|---|
| | | | 1/4" NPT Process | 1/2" NPT Process |
| 2-12 | 0.2-0.4 | 1,000 | 4WPS0016F4F201 | 4WPS0016F2F201 |
| 2-16 | 0.2-0.5 | 1,000 | 4WPS0106F4F201 | 4WPS0106F2F201 |
| 2-20 | 0.3-0.6 | 1,000 | 4WPS0206F4F201 | 4WPS0206F2F201 |
| 3-28 | 0.3-0.8 | 1,000 | 4WPS0306F4F201 | 4WPS0306F2F201 |
| 7-100 | 0.7-2.0 | 1,000 | 4WPS0406F4F201 | 4WPS0406F2F201 |

| Adjustable Range PSI | Adjustable Dead Band E-Position PSI | Proof Pressure PSI | 1/2" NPT Electrical | |
|---|---|---|---|---|
| | | | 1/4" NPT Process | 1/2" NPT Process |
| 2-12 | 1.2-3 | 1,000 | 4WPSA0016F4F201 | 4WPSA0016F2F201 |
| 2-16 | 1.6-4 | 1,000 | 4WPSA0106F4F201 | 4WPSA0106F2F201 |
| 2-20 | 2-5 | 1,000 | 4WPSA0206F4F201 | 4WPSA0206F2F201 |
| 3-28 | 2.8-7 | 1,000 | 4WPSA0306F4F201 | 4WPSA0306F2F201 |
| 7-100 | 9.9-28.4 | 1,000 | 4WPSA0406F4F201 | 4WPSA0406F2F201 |

## Dimensions

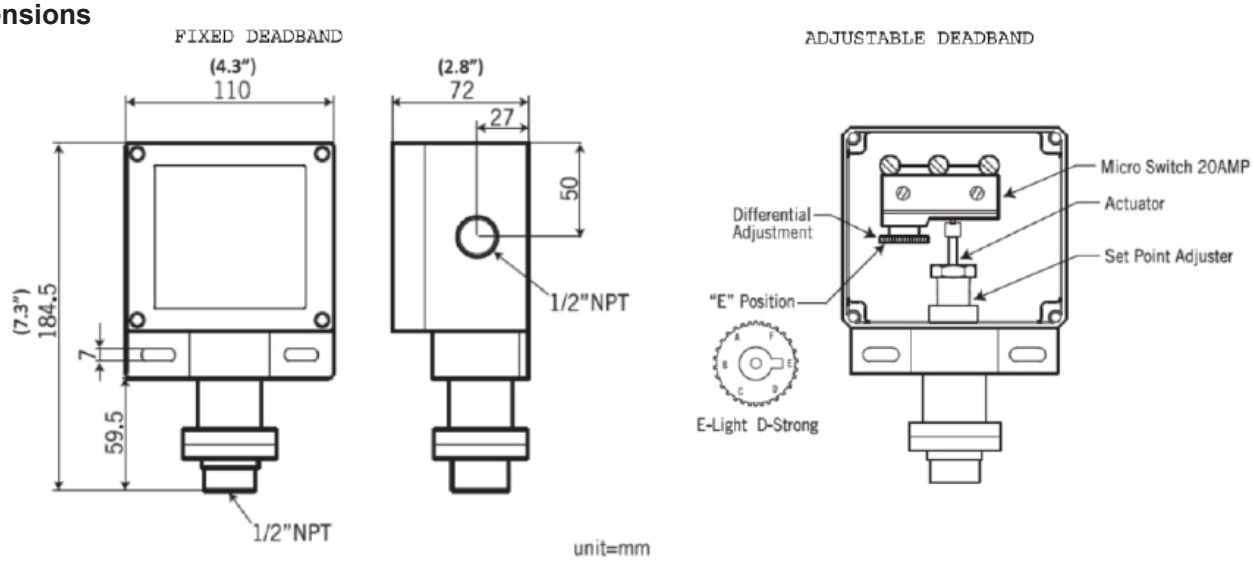


## Wiring Diagram

1 x SPDT

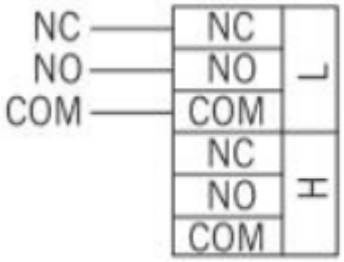


2 x SPDT

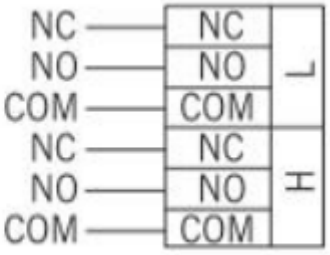

# Medium Pressure and Adjustable Deadband Pressure Switch



## Engineering Code (how to order)

**SERIES**

**PRESSURE RANGES (PSI)**

| | Pressure Range Min | Pressure Range Max | Deadband | Proof Pressure PSI | Code |
|---|---|---|---|---|---|
| Fixed Deadband | 2 | 12 | 0.2-0.4 | 1,000 | 0 0 1 |
| | 2 | 16 | 0.2-0.5 | 1,000 | 0 1 0 |
| | 2 | 20 | 0.3-0.6 | 1,000 | 0 2 0 |
| | 3 | 28 | 0.3-0.8 | 1,000 | 0 3 0 |
| | 7 | 100 | 0.7-2.0 | 1,000 | 0 4 0 |
| Adjustable Deadband | 2 | 12 | 1.2-3 | 1,000 | 0 0 1 |
| | 2 | 16 | 1.6-4 | 1,000 | 0 1 0 |
| | 2 | 20 | 2-5 | 1,000 | 0 2 0 |
| | 3 | 28 | 2.8-7 | 1,000 | 0 3 0 |
| | 7 | 100 | 9.9-28.4 | 1000 | 0 4 0 |

4WPS - [ ][ ][ ] - [ ] - [ ][ ] - [ ][ ] - [ ][ ] - [ ] - [ ][ ][ ][ ]

4WPSA - [ ][ ][ ] - [ ] - [ ][ ] - [ ][ ] - [ ][ ] - [ ] - [ ][ ][ ][ ]

**WETTED PARTS**

316 Stainless Steel, diaphragm welded (standard) — 6

**PROCESS CONNECTION**

| | Code |
|---|---|
| 1/2" NPT Female | F 2 |
| 1/4" NPT Female | F 4 |
| 1/2" BSP Female | B 2 |
| 1/4" BSP Female | B 4 |
| 1/2" PT Female | P 2 |
| 1/4" PT Female | P 4 |
| M20 X P1.5 | M 2 |

**CONDUIT CONNECTION**

| | Code |
|---|---|
| 3/4" NPT Female | F 3 |
| 1/2" NPT Female (standard) | F 2 |
| M20 X P1.5 | M 2 |

**SWITCH TYPE**

| | Code |
|---|---|
| Micro Switch, 1 x SPDT | 0 1 |
| Micro Switch, 2 x SPDT (one setpoint), *not available for Adjustable Deadband* | 0 2 |
| Gold Contact, 1 x SPDT, *not available for Adjustable Deadband* | 3 A |
| Gold Contact, 2 x SPDT (one setpoint), *not available for Adjustable Deadband* | 3 B |

**OPTIONS**

| | Code |
|---|---|
| Custom Pressure Scale (R1=psi, R2=kPa, R3=kg/cm2, R4=cmH2O, R5=ftH2O, R6=inHg, R7=mmHg, R8=inH2O, R9=ozIN2, R10=ATM, R11=bar, R12=mbar, R13=MPa, R14=mH2O, R15=mmH2O, R16=Pa) | R X X X |
| Customer Specific (Numbers from Z01 to Z999) | Z # # # |

# 6WPS & 6WPSA

# Explosion Proof and Adjustable Deadband Pressure Switch




Switches with UL & CSA Recognized and File No. E12252.

## Description & Features:

- Heavy-duty Explosion-proof pressure switch
- Low pressure to 4,000 psi
- High current ratings for 1 x SPDT or 2 x SPDT switches
- Fixed or adjustable deadband options
- Die cast aluminum construction with welded seal
- 1% accuracy
- IP68 rated including Hermetically sealed option
- cULus listed and RU recognized
- CRN registered

## Applications:

- Designed for hazardous areas including Oil & Gas, Petrochemical,Power Generation, Waste Water and others

| Specifications | |
|---|---|
| **Housing** | Heavy-duty explosion-proof die-cast aluminum, blue colour |
| **Accuracy** | +/- 1% of the adjustable set-point range |
| **Pressure Connection** | Female 1/4" or 1/2" NPT, BSP and M20xP1.5 |
| **Electrical Connection** | Female 1/2" or 3/4" NPT, M20xP1.5 |
| **Wetted Parts** | 316 Stainless Steel welded |
| **Set Point Adjustment** | Field selectable |
| **Deadband** | Fixed or Adjustable, see Order Codes |
| **Contact Rating** | Fixed Deadband:<br>15A @ 125/250VAC, 0.4A @ 125VDC, 3A @ 30VDC<br>Hermetically sealed switch 5A @ 250VAC<br>Gold contact microswitch 1A @ 125/250VAC<br><br>Adjustable Deadband:<br>20A @ 125/250/480VAC, 5A @ 125VDC |
| **No. of Contacts** | 1 x SPDT or 2 x SPDT (only 1 x SPDT available for Adjustable Deadband range) |
| **Ambient/Process Temperature** | -30 to 205 deg C (-22 to 400 deg F) |
| **Enclosure Rating** | IP68, Protection from dust ingress and submersion in fresh water to a maximum depth of 1.5 metres for up to 30 minutes |
| **Approvals** | cULus listed, Class I Divison 1 Groups A, B, C & D; Class II Divison 1 Groups E, F & G (housing)<br>RU recognized, file no E12252 (switch only)<br>CRN registered |
| **Weight** | 3.95 lbs (1.79 kg) |

# 6WPS & 6WPSA

# Explosion Proof and Adjustable Deadband Pressure Switch

## Order Codes

| Adjustable Range PSI | Fixed Dead Band Per Switch Type, PSI | | | Proof Pressure PSI | Micro Switch Option with 3/4" NPT Electrical | |
|---|---|---|---|---|---|---|
| | Micro | Hermetically Sealed | Gold Contact | | 1/4" NPT Process | 1/2" NPT Process |
| 10-100 | 0.9-2.1 | 5.4-12 | 4.7-9.2 | 3,000 | 6WPS0106F4F301U | 6WPS0106F2F301U |
| 35-200 | 1.4-5.4 | 5.4-18.5 | 4.7-11.4 | 3,000 | 6WPS0206F4F301U | 6WPS0206F2F301U |
| 50-300 | 1.4-6.9 | 5.4-45.5 | 5.3-37 | 3,000 | 6WPS0306F4F301U | 6WPS0306F2F301U |
| 100-600 | 1.7-15.1 | 5.7-66.7 | 5.3-78 | 3,000 | 6WPS0606F4F301U | 6WPS0606F2F301U |
| 100-1,300 | 5.5-15 | 5.7-126.4 | 5.3-106.5 | 3,000 | 6WPS1306F4F301U | 6WPS1306F2F301U |
| 300-2,400 | 19.6-39.5 | 19.9-227.2 | 16.9-165 | 4,000 | 6WPS2406F4F301U | 6WPS2406F2F301U |
| 400-4,000 | 32.5-65.6 | 19.9-326.6 | 16.9-213 | 5,000 | 6WPS4006F4F301U | 6WPS4006F2F301U |

| Adjustable Range PSI | Adjustable Dead Band E-position PSI | Proof Pressure PSI | Micro Switch Option with 3/4" NPT Electrical | |
|---|---|---|---|---|
| | | | 1/4" NPT Process | 1/2" NPT Process |
| 10-100 | 10-25 | 3,000 | 6WPSA0106F4F301U | 6WPSA0106F2F301U |
| 35-200 | 12-30 | 3,000 | 6WPSA0206F4F301U | 6WPSA0206F2F301U |
| 50-300 | 28-50 | 3,000 | 6WPSA0306F4F301U | 6WPSA0306F2F301U |
| 100-600 | 28-60 | 3,000 | 6WPSA0606F4F301U | 6WPSA0606F2F301U |
| 200-1,300 | 42-100 | 3,000 | 6WPSA1306F4F301U | 6WPSA1306F2F301U |

## Dimensions

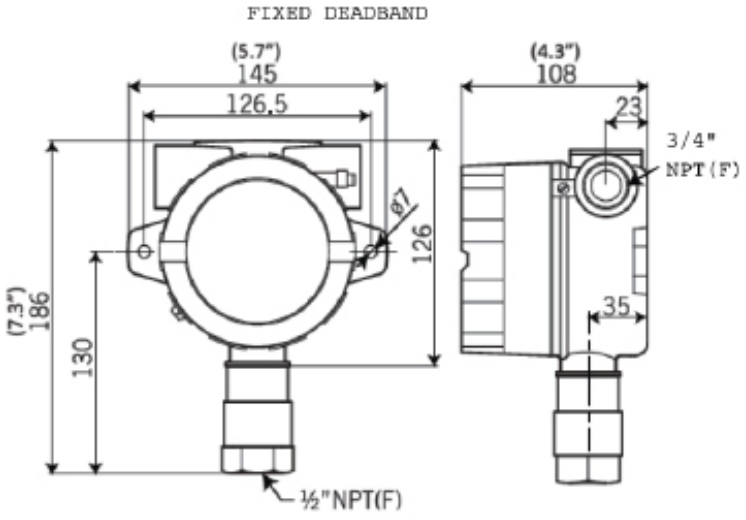


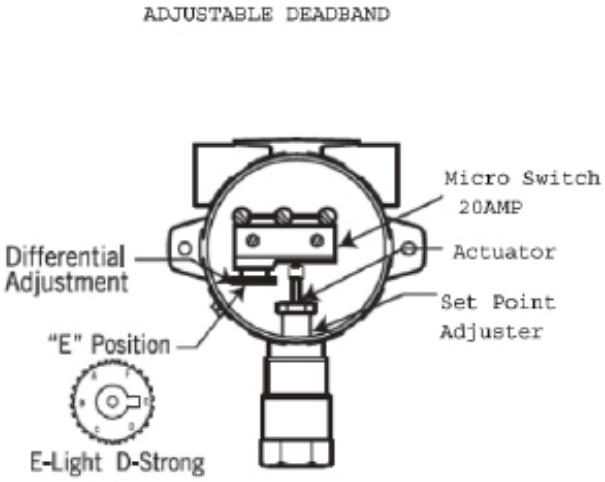


### Wiring Schematic

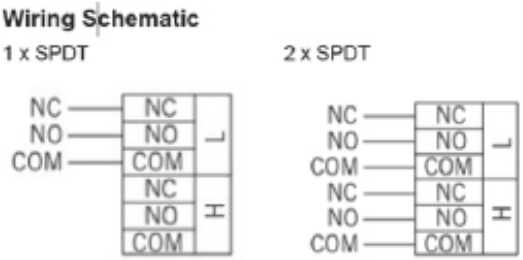

# Explosion Proof and Adjustable Deadband Pressure Switch



## Engineering Code

**SERIES**

**PRESSURE RANGES (PSI)**

| | Pressure Range Min | Pressure Range Max | Deadband | Proof Pressure PSI | | |
|---|---|---|---|---|---|---|
| Fixed Deadband | 10 | 100 | 2.8-6.4 | 3,000 | 6WPS- | 010 |
| | 35 | 200 | 4.3-7.0 | 3,000 | | 020 |
| | 50 | 300 | 4.3-7.0 | 3,000 | | 030 |
| | 100 | 600 | 5.0-15 | 3,000 | | 060 |
| | 100 | 1,300 | 14.2-56.8 | 3,000 | | 130 |
| | 300 | 2,400 | 14.2-71 | 4,000 | | 240 |
| | 400 | 4,000 | 23.6-117.9 | 5,000 | | 400 |
| Adjustable Deadband | 10 | 100 | 10-25 | 3,000 | 6WPSA- | 010 |
| | 35 | 200 | 12-30 | 3,000 | | 020 |
| | 50 | 300 | 28-50 | 3,000 | | 030 |
| | 100 | 600 | 28-60 | 3,000 | | 060 |
| | 200 | 1,300 | 42-100 | 3,000 | | 130 |

**WETTED PARTS**

316 Stainless Steel, diaphragm welded (standard) — 6

**PROCESS CONNECTION**

| | |
|---|---|
| 1/2" NPT Female | F2 |
| 1/4" NPT Female | F4 |
| 1/2" BSP Female | B2 |
| 1/4" BSP Female | B4 |
| 1/2" PT Female | P2 |
| 1/4" PT Female | P4 |
| M20 X P1.5 | M2 |

**CONDUIT CONNECTION**

| | |
|---|---|
| 3/4" NPT Female (standard) | F3 |
| 1/2" NPT Female | F2 |
| M20 X P1.5 | M2 |

**SWITCH TYPE**

| | |
|---|---|
| Micro Switch, 1 x SPDT | 01 |
| Micro Switch, 2 x SPDT (one setpoint), *not available for Adjustable Deadband* | 02 |
| Gold Contact, 1 x SPDT, *not available for Adjustable Deadband* | 3A |
| Gold Contact, 2 x SPDT (one setpoint), *not available for Adjustable Deadband* | 3B |
| Hermetically Sealed Switch, 1 x SPDT, *not available for Adjustable Deadband* | 4A |
| Hermetically Sealed Switch, 2 x SPDT (one setpoint), *not available for Adjustable Deadband* | 4B |

**HOUSING MATERIAL**

cULus Listed, Hazardous locations — U

**OPTIONS**

| | |
|---|---|
| Custom Pressure Scale (R1=psi, R2=kPa, R3=kg/cm2, R4=cmH2O, R5=ftH2O, R6=inHg, R7=mmHg, R8=inH2O, R9=ozIN2, R10=ATM, R11=bar, R12=mbar, R13=MPa, R14=mH2O, R15=mmH2O, R16=Pa) | RXXX |
| Customer Specific (Numbers from Z01 to Z999) | Z### |

# 7WPS & 7WPSA

# Medium Pressure, Explosion Proof And Adjustable Deadband Pressure Switch




## Description & Features:

- Heavy-duty Explosion-proof pressure switch
- Low pressure to 100 psi
- High current ratings for 1 x SPDT or 2 x SPDT switches
- Fixed or adjustable deadband options
- Die cast aluminum construction with welded seal
- 1% accuracy
- IP68 rated including Hermetically sealed option
- cULus listed and RU recognized
- CRN registered
- 5 year warranty

CRN
CANADIAN REGISTRATION NUMBER

## Applications:

- Designed for hazardous areas including Oil & Gas, Petrochemical, Power Generation, Waste Water and others

Switches with UL & CSA Recognized and File No. E12252.

c UL us LISTED

| Specifications | |
|---|---|
| **Housing** | Heavy-duty explosion-proof die-cast aluminum, blue colour |
| **Accuracy** | +/- 1% of the adjustable set-point range |
| **Pressure Connection** | Female 1/4" or 1/2" NPT, BSP and M20xP1.5 |
| **Electrical Connection** | Female 1/2" or 3/4" NPT, M20xP1.5 |
| **Wetted Parts** | 316 Stainless Steel welded |
| **Set Point Adjustment** | Field selectable |
| **Deadband** | Fixed or Adjustable, see Order Codes |
| **Contact Rating** | Fixed Deadband:<br>15A @ 125/250VAC, 0.4A @ 125VDC, 3A @ 30VDC<br>Hermetically sealed switch 5A @ 250VAC<br>Gold contact microswitch 1A @ 125/250VAC<br><br>Adjustable Deadband:<br>20A @ 125/250/480VAC, 5A @ 125VDC |
| **No. of Contacts** | 1 x SPDT or 2 x SPDT (only 1 x SPDT available for Adjustable Deadband range) |
| **Ambient/Process Temperature** | -30 to 205 deg C (-22 to 400 deg F) |
| **Enclosure Rating** | IP68, Protection from dust ingress and submersion in fresh water to a maximum depth of 1.5 metres for up to 30 minutes |
| **Approvals** | cULus listed, Class I Divison 1 Groups A, B, C & D; Class II Divison 1 Groups E, F & G (housing)<br>RU recognized, file no E12252 (switch only)<br>CRN registered |
| **Weight** | 3.95 lbs (1.79 kg) |

# 7WPS & 7WPSA

# Medium Pressure, Explosion Proof And Adjustable Deadband Pressure Switch

## Order Codes

| Adjustable Range PSI | Fixed Dead Band Per Switch Type, PSI | | Proof Pressure PSI | Micro Switch Option with 3/4" NPT Electrical | |
|---|---|---|---|---|---|
| | Micro | Hermetically Sealed | | 1/4" NPT Process | 1/2" NPT Process |
| 2-12 | 0.2-0.4 | 0.7-1.4 | 1,000 | 7WPS0016F4F301U | 7WPS0016F2F301U |
| 2-16 | 0.2-0.5 | 0.7-1.8 | 1,000 | 7WPS0106F4F301U | 7WPS0106F2F301U |
| 2-20 | 0.3-0.6 | 1.1-2.1 | 1,000 | 7WPS0206F4F301U | 7WPS0206F2F301U |
| 3-28 | 0.3-0.8 | 1.1-2.8 | 1,000 | 7WPS0306F4F301U | 7WPS0306F2F301U |
| 7-100 | 0.7-2.0 | 2.5-7.0 | 1,000 | 7WPS0406F4F301U | 7WPS0406F2F301U |

| Adjustable Range PSI | Adjustable Dead Band E-position PSI | Proof Pressure PSI | 3/4" NPT Electrical | |
|---|---|---|---|---|
| | | | 1/4" NPT Process | 1/2" NPT Process |
| 2-12 | 1.2-3 | 1,000 | 7WPSA0016F4F301U | 7WPSA0016F2F301U |
| 2-16 | 1.6-4 | 1,000 | 7WPSA0106F4F301U | 7WPSA0106F2F301U |
| 2-20 | 2-5 | 1,000 | 7WPSA0206F4F301U | 7WPSA0206F2F301U |
| 3-28 | 2.8-7 | 1,000 | 7WPSA0306F4F301U | 7WPSA0306F2F301U |
| 7-100 | 9.9-28.4 | 1,000 | 7WPSA0406F4F301U | 7WPSA0406F2F301U |

## Dimensions

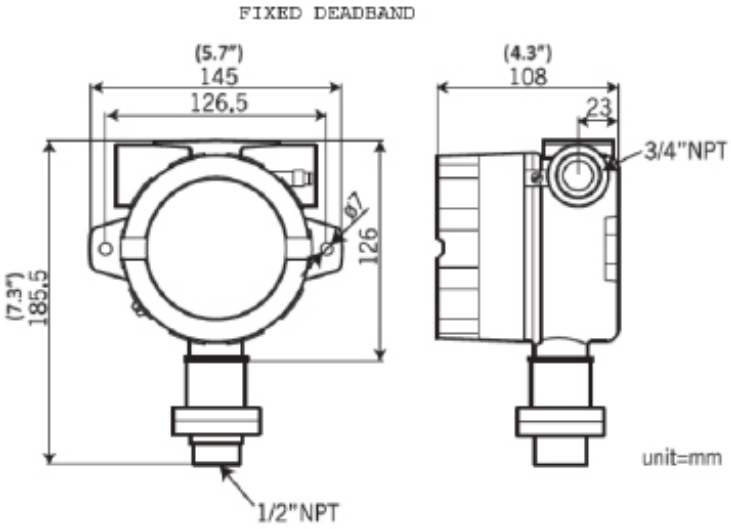


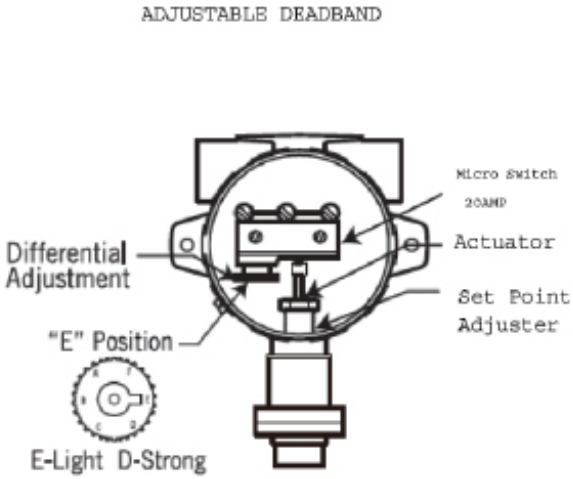


### Wiring Schematic

1 x SPDT

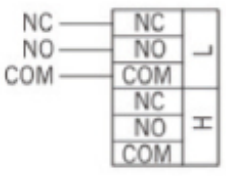


2 x SPDT

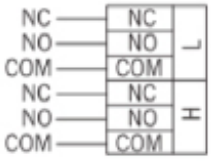

# Medium Pressure, Explosion Proof And Adjustable Deadband Pressure Switch



## Engineering Code

**SERIES**

**PRESSURE RANGES (PSI)**

| | Pressure Range Min | Pressure Range Max | Deadband | Proof Pressure PSI | Code |
|---|---|---|---|---|---|
| Fixed Deadband | 2 | 12 | 0.2-0.4 | 1,000 | 001 |
| | 2 | 16 | 0.2-0.5 | 1,000 | 010 |
| | 2 | 20 | 0.3-0.6 | 1,000 | 020 |
| | 3 | 28 | 0.3-0.8 | 1,000 | 030 |
| | 7 | 100 | 0.7-2.0 | 1,000 | 040 |
| Adjustable Deadband | 2 | 12 | 1.2-3 | 1,000 | 001 |
| | 2 | 16 | 1.6-4 | 1,000 | 010 |
| | 2 | 20 | 2-5 | 1,000 | 020 |
| | 3 | 28 | 2.8-7 | 1,000 | 030 |
| | 7 | 100 | 9.9-28.4 | 1,000 | 040 |

**WETTED PARTS**

316 Stainless Steel, diaphragm welded (standard) — 6

**PROCESS CONNECTION**

| | Code |
|---|---|
| 1/2" NPT Female | F2 |
| 1/4" NPT Female | F4 |
| 1/2" BSP Female | B2 |
| 1/4" BSP Female | B4 |
| 1/2" PT Female | P2 |
| 1/4" PT Female | P4 |
| M20 X P1.5 | M2 |

**CONDUIT CONNECTION**

| | Code |
|---|---|
| 3/4" NPT Female (standard) | F3 |
| 1/2" NPT Female | F2 |
| M20 X P1.5 | M2 |

**SWITCH TYPE**

| | Code |
|---|---|
| Micro Switch, 1 x SPDT | 01 |
| Micro Switch, 2 x SPDT (one setpoint), *not available for Adjustable Deadband* | 02 |
| Gold Contact, 1 x SPDT, *not available for Adjustable Deadband* | 3A |
| Gold Contact, 2 x SPDT (one setpoint), *not available for Adjustable Deadband* | 3B |
| Hermetically Sealed Switch, 1 x SPDT, *not available for Adjustable Deadband* | 4A |
| Hermetically Sealed Switch, 2 x SPDT (one setpoint), *not available for Adjustable Deadband* | 4B |

**HOUSING MATERIAL**

cULus Listed, Hazardous locations — U

**OPTIONS**

Custom Pressure Scale (R1=psi, R2=kPa, R3=kg/cm2, R4=cmH2O, R5=ftH2O, R6=inHg, R7=mmHg, R8=inH2O, R9=ozIN2, R10=ATM, R11=bar, R12=mbar, R13=MPa, R14=mH2O, R15=mmH2O, R16=Pa) — RXXX

Customer Specific (Numbers from Z01 to Z999) — Z###

# 8WPS & 8WPSV

# Vacuum and Low Pressure Explosion Proof Pressure Switch




## Description & Features:

- Heavy-duty Explosion-proof pressure switch
- Vacuum pressure to 10 psi
- High current ratings for 1 x SPDT or 2 x SPDT switches
- Fixed deadband
- Die cast aluminum construction with welded seal
- 1% accuracy
- IP68 rated including Hermetically sealed option
- cULus listed and RU recognized
- CRN registered
- 5 year warranty

Switches with UL & CSA Recognized and File No. E12252.

c UL us LISTED

CRN CANADIAN REGISTRATION NUMBER

## Applications:

- Suitable for vacuum and low pressure applications in hazardous areas including natural gas monitoring and control

| Specifications | |
|---|---|
| **Housing** | Heavy-duty explosion-proof die-cast aluminum, blue colour |
| **Accuracy** | +/- 1% of the adjustable set-point range |
| **Pressure Connection** | 1/4" or 1/2" NPT, BSP and M20xP1.5 |
| **Electrical Connection** | Female 1/2" or 3/4" NPT, M20xP1.5 |
| **Wetted Parts** | 316 Stainless Steel welded (except for Vacuum range, Viton o-ring) |
| **Set Point Adjustment** | Field selectable |
| **Deadband** | Fixed, see Order Codes |
| **Contact Ratings** | Fixed Deadband:<br>15A @ 125/250VAC, 0.4A @ 125VDC, 3A @ 30VDC<br>Hermetically sealed switch 5A @ 250VAC<br>Gold contact microswitch 1A @ 125/250VAC<br><br>Adjustable Deadband:<br>20A @ 125/250/480VAC, 5A @ 125VDC |
| **No. of Contacts** | 1 x SPDT or 2 x SPDT (only 1 x SPDT available for Adjustable Deadband range) |
| **Ambient/Process Temperature** | -30 to 205 deg C (-22 to 400 deg F), Vacuum range only -5 to 150 deg C (23 to 300 deg F) |
| **Enclosure Rating** | IP68<br>Protection from dust ingress and submersion in fresh water to a maximum depth of 1.5 metres for up to 30 minutes |
| **Approvals** | cULus listed, Class I Divison 1 Groups A, B, C & D; Class II Divison 1 Groups E, F & G (housing)<br>RU recognized, file no E12252 (switch)<br>CRN registered |
| **Weight** | 3.95 lbs (1.79 kg) |

# 8WPS & 8WPSV

# Vacuum and Low Pressure Explosion Proof Pressure Switch

## Order Codes

| Adjustable Range PSI | Fixed Dead Band PSI | Proof Pressure PSI | 3/4" NPT Electrical | |
|---|---|---|---|---|
| | | | 1/4" NPT Process | 1/2" NPT Process |
| -25 to -760 mmHg (-1.0 to -30" Hg) | 10-20 mmHg (0.39 to 0.79" Hg) | 1,000 | 8WPSV1306F4F301U | 8WPSV1306F2F301U |
| 0.05-1.8 | 0.015-0.3 | 500 | 8WPS0016F4F301U | 8WPS0016F2F301U |
| 0.4-2.8 | 0.2-0.5 | 500 | 8WPS0106F4F301U | 8WPS0106F2F301U |
| 0.4-5.0 | 0.3-0.6 | 500 | 8WPS0206F4F301U | 8WPS0206F2F301U |
| 1.6-9.8 | 0.3-0.8 | 500 | 8WPS0306F4F301U | 8WPS0306F2F301U |

## Dimensions

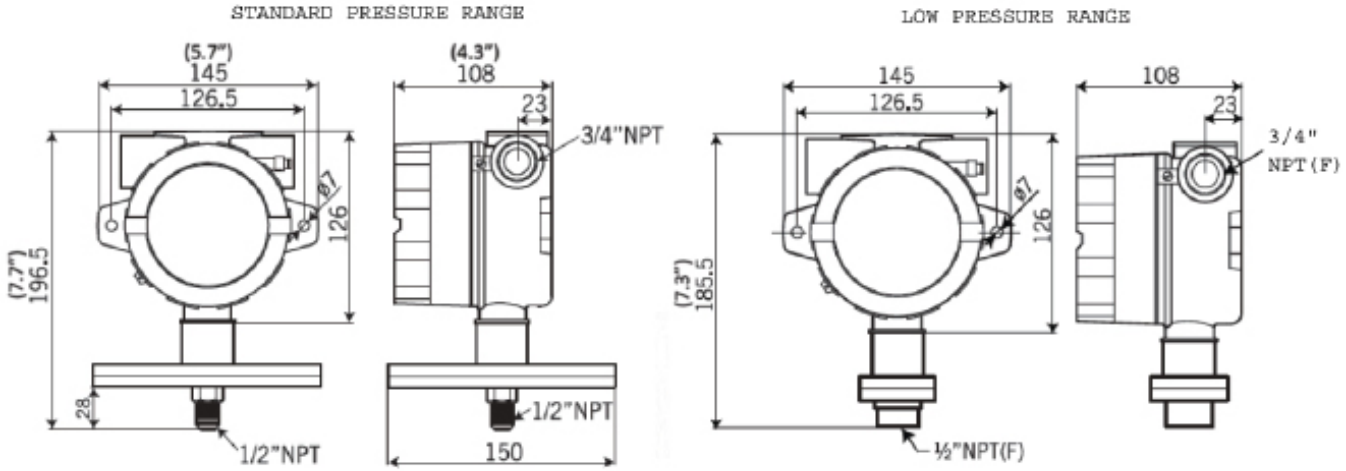


## Wiring Schematic

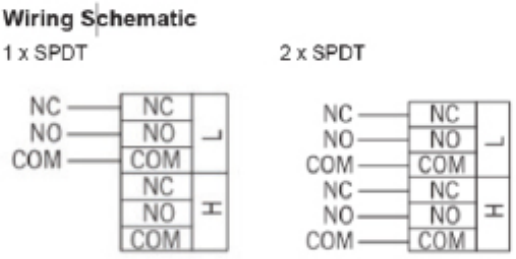

# Vacuum and Low Pressure Explosion Proof Pressure Switch



## Engineering Codes

**SERIES**

**PRESSURE RANGES**

| Pressure Range | | Deadband | | Proof Pressure PSI | |
|---|---|---|---|---|---|
| Min | Max | Standard Switch | Hermetically Sealed Switch | | |
| Low Pressure, PSI 0.05 | 1.8 | 0.015-0.3 | - | 500 | 0 0 1 |
| 0.3 | 1.8 | - | 0.1-0.4 | | |
| 0.4 | 2.8 | 0.2-0.5 | 0.3-0.6 | 500 | 0 1 0 |
| 0.4 | 5.0 | 0.3-0.6 | 0.3-1.0 | 500 | 0 2 0 |
| 1.6 | 9.8 | 0.3-0.8 | 0.3-1.2 | 500 | 0 3 0 |
| Vacuum, mmHg -25 | -760 | 10-20 | - | 1,000 | C W P S V - 1 3 0 |

**WETTED PARTS**
316 Stainless Steel, diaphragm welded (low pressure, standard) — 6
316 Stainless Steel, Viton o-ring (vacuum, standard)

**PROCESS CONNECTION**
*(Vacuum Range with Female connection)*
*(Low Pressure Range with Male connection)*

| | |
|---|---|
| 1/2" NPT | F 2 |
| 1/4" NPT | F 4 |
| 1/2" BSP | B 2 |
| 1/4" BSP | B 4 |
| 1/2" PT | P 2 |
| 1/4" PT | P 4 |
| M20 X P1.5 | M 2 |

**CONDUIT CONNECTION**

| | |
|---|---|
| 3/4" NPT Female (standard) | F 3 |
| 1/2" NPT Female | F 2 |
| M20 X P1.5 | M 2 |

**SWITCH TYPE**

| | |
|---|---|
| Micro Switch, 1 x SPDT | 0 1 |
| Micro Switch, 2 x SPDT (one setpoint) | 0 2 |
| Gold Contact, 1 x SPDT | 3 A |
| Gold Contact, 2 x SPDT (one setpoint) | 3 B |
| Hermetically Sealed Switch, 1 x SPDT | 4 A |
| Hermetically Sealed Switch, 2 x SPDT (one setpoint) | 4 B |

**HOUSING MATERIAL**
cULus Listed, Hazardous locations — U

**OPTIONS**
Custom Pressure Scale (R1=psi, R2=kPa, R3=kg/cm2, R4=cmH2O, R5=ftH2O, R6=inHg, R7=mmHg, R8=inH2O, R9=ozIN2, R10=ATM, R11=bar, R12=mbar, R13=MPa, R14=mH2O, R15=mmH2O, R16=Pa) — R X X X
Customer Specific (Numbers from Z01 to Z999) — Z # # #

# 9WPS Explosion Proof Compact Pressure Switch



## Description & Features:

- Vac to 10,000 psi pressure range
- Explosion proof SPDT or DPDT switch
- Stainless steel with FKM and PTFE wetted parts
- ANSI dual seal design
- Diaphragm seal/piston sensor
- Safe to adjust during operation
- Lockable setpoint wheel to avoid shifting during operation
- ±2% of full scale accuracy
- NEMA 4X, 7 & 9 enclosure rating
- CSA approved for hazardous locations
- Designed for sour gas applications requiring NACE standards MR0175-2009
- CRN registered (up to 3,000 psi models)
- 5 year warranty

## Applications:

- Suitable for hazardous locations including safety panels and with pump and gas compressors, turbines and other oil & gas applications
- Appropriate for oil & gas, power plants, chemical facilities and water treatment
- Designed for hazardous locations where an explosion proof switch is required

| Specifications | |
|---|---|
| Housing Material | 316 SS |
| Port Material | 316 SS |
| Accuracy | ±2% of full scale |
| Pressure Connection | 1/4” NPTF (1/2” NPTF optional) |
| Electrical Connection | 1/2” NPTM, 18 AWG, 18” (457 mm) free leads |
| Wetted Parts | Vacuum and low pressure - seals: FKM diaphragm<br>High pressure - piston: SS with PTFE backup ring and FKM o-ring |
| Set Point Adjustment | Internal adjustment wheel with built in locking set-screws (#6)[1] |
| Deadband | Fixed |
| Contact Rating | 11 amps @ 125/250 Vac<br>5 amps @ 30 Vdc |
| No. of Contacts | 1 x SPDT, DPDT optional |
| Vibration | 10 g 10-500 Hz, MIL-STD-202F |
| Shock | 50 g 11 ms, MIL-S-901C |
| EMI/RFI Protection | EN55011 |
| Ambient Temperature | -40°F to 149°F (-40°C to 65°C) |
| Enclosure Rating | NEMA 4X, 7 & 9 |
| Approvals | CSA approved (Canada and USA) for use in hazardous locations Class I, Div. 1, Groups B, C & D; Class II, Div. 1, Groups E, F & G<br>CRN registered (up to 3,000 psi model)<br>ANSI Dual Seal Compliant<br>NACE MR0175-2009 |
| Typical Life | 2.5 million cycles |
| Weight | 1.85 lbs (839 grams) |

[1] Need to loosen set screw (#6) at all times when resetting adjustment.

# 9WPS Explosion Proof Compact Pressure Switch

## Order Codes

| Adjustable Range psi (bar) | | Approximate Deadband (Actuation value) psi (bar) | Proof Pressure psi (bar) | SPDT 1/4" NPT | SPDT 1/2" NPT | DPDT 1/4" NPT | DPDT 1/2" NPT |
|---|---|---|---|---|---|---|---|
| Min | Max | | | | | | |
| 1" Hg | 30" Hg | 4-9" Hg | 30" Hg | 9WPSV01N4 | 9WPSV01N2 | 9WPSV012CCVN4S | 9WPSV012CCVN2S |
| 2 (0.1) | 15 (1) | 1-3 (.07-.2) | 1,000 (69) | 9WPSL02N4 | 9WPSL02N2 | 9WPSL022CCVN4S | 9WPSL022CCVN2S |
| 1 (0.07) | 30 (2) | 1-4 (.07-.27) | 1,000 (69) | 9WPSL06N4 | 9WPSL06N2 | 9WPSL062CCVN4S | 9WPSL062CCVN2S |
| 5 (0.3) | 150 (10.3) | 2-25 (0.1-1.7) | 1,000 (69) | 9WPSL03N4 | 9WPSL03N2 | 9WPSL032CCVN4S | 9WPSL032CCVN2S |
| 25 (1.7) | 300 (20.6) | 7-40 (0.5-2.8) | 1,000 (69) | 9WPSL04N4 | 9WPSL04N2 | 9WPSL042CCVN4S | 9WPSL042CCVN2S |
| 50 (3.4) | 500 (34.5) | 15-60 (1-4.1) | 1,000 (69) | 9WPSL05N4 | 9WPSL05N2 | 9WPSL052CCVN4S | 9WPSL052CCVN2S |
| 100 (6.9) | 750 (51.7) | 50-150 (3.4-10.3) | 15,000 (1,034) | 9WPSH06N4 | 9WPSH06N2 | 9WPSH062CCVN4S | 9WPSH062CCVN2S |
| 150 (10.3) | 1,000 (69) | 70-200 (4.7-13.8) | 15,000 (1,034) | 9WPSH07N4 | 9WPSH07N2 | 9WPSH072CCVN4S | 9WPSH072CCVN2S |
| 150 (10.3) | 3,000 (207) | 50-1,000 (3.4-68.9) | 15,000 (1,034) | 9WPSH11N4 | 9WPSH11N2 | 9WPSH112CCVN4S | 9WPSH112CCVN2S |
| 400 (27.6) | 3,000 (207) | 100-400 (6.9-27.6) | 15,000 (1,034) | 9WPSH08N4 | 9WPSH08N2 | 9WPSH082CCVN4S | 9WPSH082CCVN2S |
| 700 (48.2) | 5,000 (345) | 140-600 (9.6-41.4) | 15,000 (1,034) | 9WPSH09N4 | 9WPSH09N2 | 9WPSH092CCVN4S | 9WPSH092CCVN2S |
| 1,000 (69) | 7,500 (517) | 140-800 (9.6-55.2) | 15,000 (1,034) | 9WPSH10N4 | 9WPSH10N2 | 9WPSH102CCVN4S | 9WPSH102CCVN2S |
| 5,000 (344.8) | 10,000 (689.7) | 200-2,000 (13.8-137.9) | 15,000 (1,034) | 9WPSH12N4 | 9WPSH12N2 | 9WPSH122CCVN4S | 9WPSH122CCVN2S |

### Vacuum

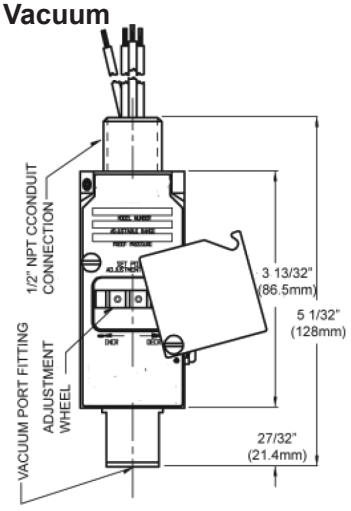


### Low Pressure

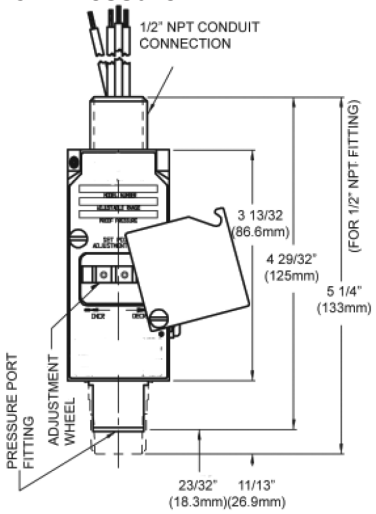


### High Pressure

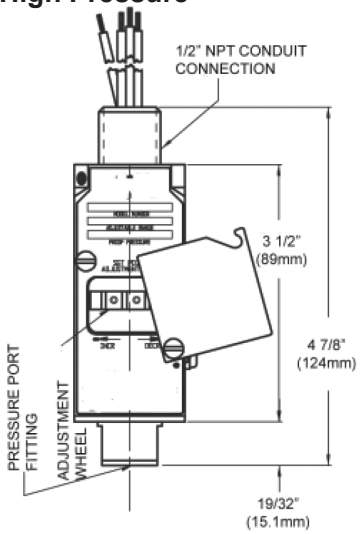


### Top View

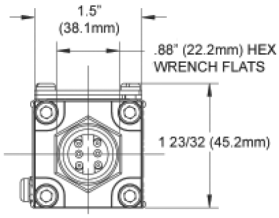


### Bottom View

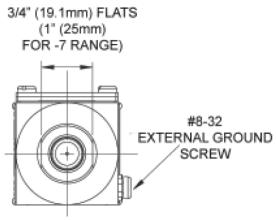


## Wiring Code

| Lead | Pressure | | Vacuum | |
|---|---|---|---|---|
| | Circuit #1 | Circuit #2 | Circuit #1 | Circuit #2 |
| Normally Open | Red | Yellow | Red | Yellow |
| Common | Purple | Brown | Purple | Brown |
| Normally Closed | Blue | Orange | Blue | Orange |
| Ground | Green | | Green | |

## Wiring Diagram

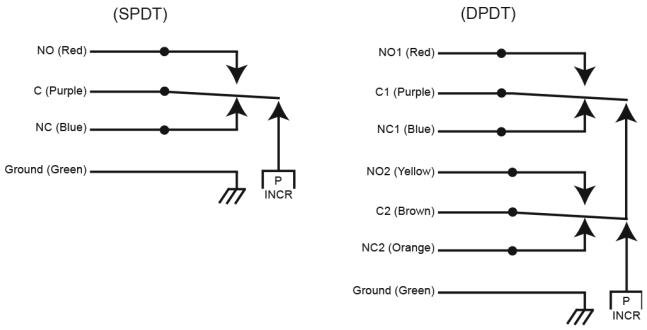

# 9WPS Explosion Proof Compact Pressure Switch

## Series Number (how to order)

| 9 | W | P | S | - | | | | - | | | | - | | | - | | - | | | | |
|---|---|---|---|---|---|---|---|---|---|---|---|---|---|---|---|---|---|---|---|---|---|

**SERIES**

**PRESSURE RANGES PSI (BAR)**

| | Adjustable Range psi (bar) | | Deadband (*Actuation Value based on closed contact*) | |
|---|---|---|---|---|
| | Min | Max | | |
| Vacuum Pressure Switch (*1"-30" Hg*) | 1" Hg | 30" Hg | 4-9" Hg | V 0 1 |
| Low Presssure Switch (*2-500 psi*) | 2 (0.1) | 15 (1) | 1-3 (0.07-0.2) | L 0 2 |
| | 5 (0.3) | 150 (10.3) | 2-25 (0.1-1.7) | L 0 3 |
| | 25 (1.7) | 300 (20.6) | 7-40 (0.5-2.8) | L 0 4 |
| | 50 (3.4) | 500 (34.5) | 15-60 (1-4.1) | L 0 5 |
| High Pressure Switch (*100-10,000 psi*) | 100 (6.9) | 750 (51.7) | 50-150 (3.4-10.3) | H 0 6 |
| | 150 (10.3) | 1,000 (69) | 70-200 (4.7-13.8) | H 0 7 |
| | 400 (27.6) | 3,000 (207) | 100-400 (6.7-27.6) | H 0 8 |
| | 700 (48.2) | 5,000 (345) | 140-600 (9.6-41.4) | H 0 9 |
| | 1,000 (69) | 7,500 (517) | 140-800 (9.6-55.2) | H 1 0 |
| | 150 (10.3) | 3,000 (207) | 50-1,000 (3.4-68.9) | H 1 1 |
| | 5,000 (344.8) | 10,000 (689.7) | 200-2,000 (13.8-137.9) | H 1 2 |
| | Special Range | | | ? ? ? |

**SWITCH**

| | |
|---|---|
| SPDT Switch, 11 amps @ 125 / 250 VAC; 5 amps @ 30 VDC (standard) | 1 C C |
| DPDT Switch, 11 amps @ 125 / 250 VAC; 5 amps @ 30 VDC | 2 C C |
| SPDT gold contact switch, 1 amp @ 125 VAC | 1 G H |
| DPDT gold contact switch, 1 amp @ 125 VAC | 2 G H |

**WETTED PARTS**

| | |
|---|---|
| Viton Diaphragm & O-Rings (standard) | V |
| Buna-N Diaphragm & O-Rings | B |
| EPR Diaphragm & O-Rings (no UL or CSA) | E |

**MECHANICAL CONNECTION**

| | |
|---|---|
| 1/4" NPT Female (standard) | N 4 |
| 1/2" NPT Female | N 2 |
| 7/16-20 SAE Female | U 1 |

**HOUSING**

| | |
|---|---|
| 316 Stainless Steel (standard) | S |

**OPTIONS**

| | |
|---|---|
| Extra Wire Length (*in Inches*) | C ? ? ? |
| Special | S ? ? ? |

# WPS Commercial Differential Pressure Switch






## Dimensions (mm)

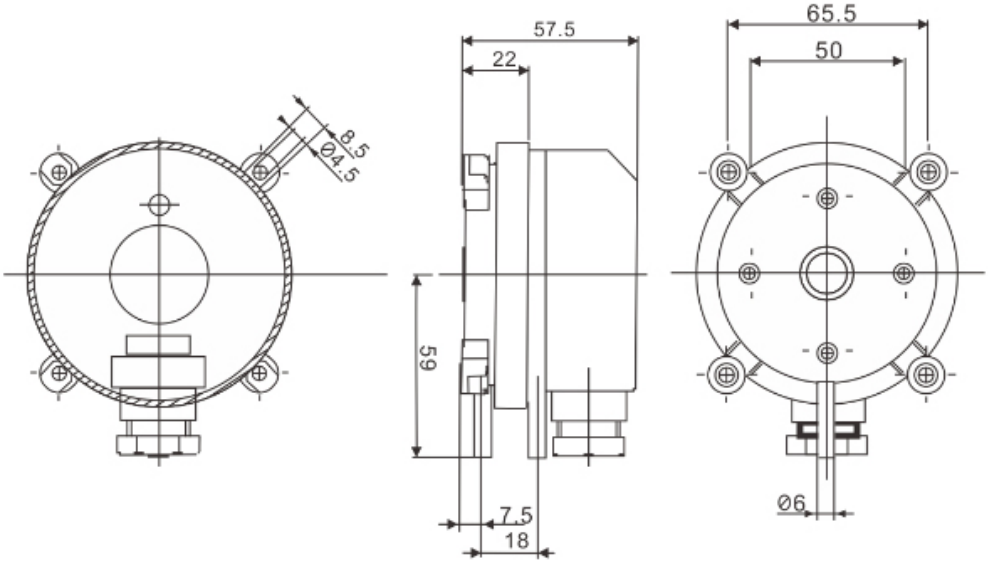


| Specifications | |
|---|---|
| **Housing Material** | Grey colour Polyamide 6.6 plastic |
| **Window Cover Material** | Frosted Polystyrene resin |
| **Deadband Accuracy** | +/- 15% of upper and lower pressure ratings |
| **Pressure Connection** | 2 x plastic pipe connection, 6.0mm (1/4") external diameter, labelled P1 & P2 |
| **Electrical Connection** | Flat plug 6.3mm x 0.8mm or push-on screw terminals with PG-11 or M20x1.5 cable strain relief |
| **Wetted Parts** | Silicone based diaphragm, tempered at 392°F (200°C) |
| **Set Point Adjustment** | Field adjustable knob |
| **Contact Rating** | 1.0A 250VAC output, 0.1A 24VDC (low voltage version) |
| **Number of Contacts** | Single-pole double-throw (SPDT) |
| **Maximum Operating Pressure** | 1.45 psi (10 kPa) |
| **Ambient/Process Temperature** | -4°F to 185°F (-20°C to 85°C) |
| **Storage Temperature** | -40°F to 185°F (-40°C to 85°C) |
| **Enclosure Rating** | IP54 |
| **Approvals** | CE, RoHS & REACH compliant |
| **Typical Life** | Over $10^6$ switching operations |
| **Weight** | 150g with cover, 110g without cover |
| **Mounting Position** | Vertical installation with pressure connections pointing downwards |

# WPS Commercial Differential Pressure Switch

## Order Codes

| Set Point Range | | | | Average Deadband |
|---|---|---|---|---|
| Pa | | $inH_2O$ | | |
| 20-200 | WPS0200 | 0.08-1.20 | WPS0200R8 | +/- 15% |
| 30-300 | WPS0300 | 0.12-1.60 | WPS0300R8 | +/- 15% |
| 50-500 | WPS0500 | 0.20-2.00 | WPS0500R8 | +/- 15% |
| 200-1,000 | WPS1000 | 0.80-4.00 | WPS1000R8 | +/- 15% |
| 500-2,500 | WPS2500 | 2.00-10.00 | WPS2500R8 | +/- 15% |
| 1,000-4,000 | WPS4000 | 4.00-16.00 | WPS4000R8 | +/- 15% |

## Optional Order Codes

| Static Pressure tip with Flange | PVC Tubing, 20m (65') | WPS Installation Kit With Tips and Tubing |
|---|---|---|
| WPS1010 | WPS1020 | WPS1015 |

## Dimensions (mm)

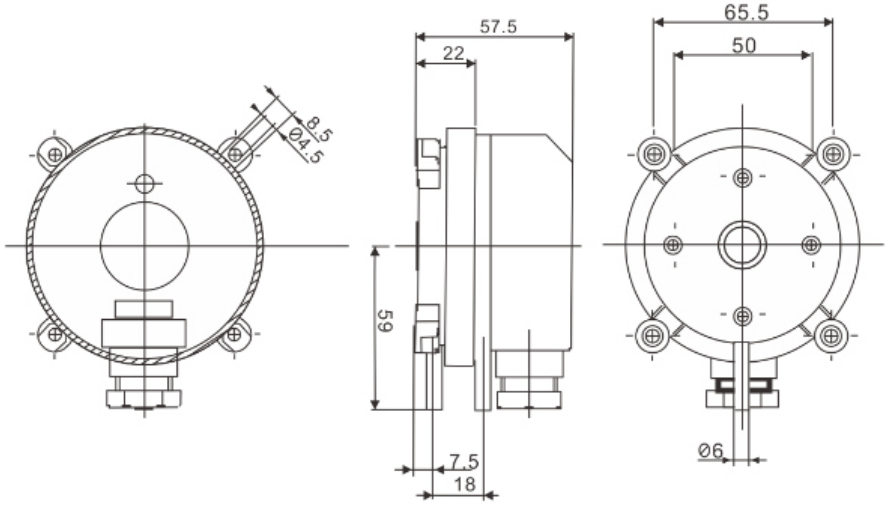


## Wiring Diagram

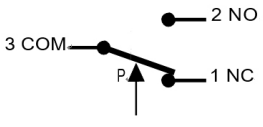


1 Break contact
2 Operating contact
3 Power supply line

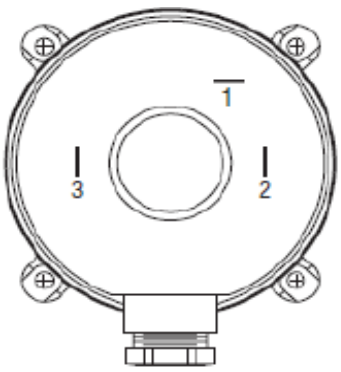

# 5WPS & 5WPSL

# Differential Pressure Switch




Switches with UL & CSA Recognized and File No. E12252.

CRN
CANADIAN REGISTRATION NUMBER

## Description & Features:

- General Purpose, watertight differential pressure switch
- Low pressure to 300 psi
- High current ratings for 1 x SPDT or 2 x SPDT switches
- Fixed deadband
- Die cast aluminum construction with welded seal
- 1% accuracy
- NEMA 4 & 4X, IP66 rated
- RU recognized (switch only), file no E12252
- CRN registered
- 5 year warranty

## Applications:

- Suitable for differential pressure applications including filter monitoring and control

| Specifications | |
|---|---|
| **Housing** | Heavy-duty die-cast aluminum, blue colour |
| **Accuracy** | +/- 1% of the adjustable set-point range |
| **Pressure Connection** | Female 1/4" NPT or BSP |
| **Electrical Connection** | Female 1/2" or 3/4" NPT, M20xP1.5 |
| **Wetted Parts** | Low pressure ranges - 316 Stainless Steel welded & Titanium<br>High pressure ranges - 316 Stainless Steel welded |
| **Set Point Adjustment** | Field selectable |
| **Deadband** | Fixed, see Order Codes |
| **Contact Rating** | 15A @ 125/250VAC, 0.4A @ 125VDC, 3A @ 30VDC<br>Gold contact microswitch 1A @ 125/250VAC |
| **No. of Contacts** | 1 x SPDT or 2 x SPDT |
| **Ambient/Process Temperature** | -30 to 205 deg C (-22 to 400 deg F) |
| **Enclosure Rating** | NEMA 4 & 4X, IP66<br>Protection against liquid and solid ingress, suitable for indoor or outdoor use and resistant to corrosion |
| **Approvals** | RU recognized, file no E12252 (switch only), CRN registered |
| **Weight** | 4.95 lbs (2.25 kg) |

## Order Codes

| Adjustable Range PSI | Dead Band PSI | Proof Pressure PSI | 1/2" NPT Electrical |
|---|---|---|---|
| | | | 1/4" NPT Process |
| 400-1,900 mmH2O (15.7-74.8" H2O) | 30-80 mmH2O (1.2-3.1" H2O) | 500 | 5WPSL240AF4F201 |
| 1,000-10,000 mmH2O (39.4-393.7" H2O) | 70-200 mmH2O (2.8-7.9" H2O) | 500 | 5WPSL400AF4F201 |
| 3-28 | 0.15-1.4 | 1,000 | 5WPS0106F4F201 |
| 7-100 | 0.35-5 | 1,000 | 5WPS0206F4F201 |
| 35-200 | 1.75-10 | 1,000 | 5WPS0306F4F201 |
| 50-300 | 2.5-25 | 1,000 | 5WPS0406F4F201 |

## Dimensions

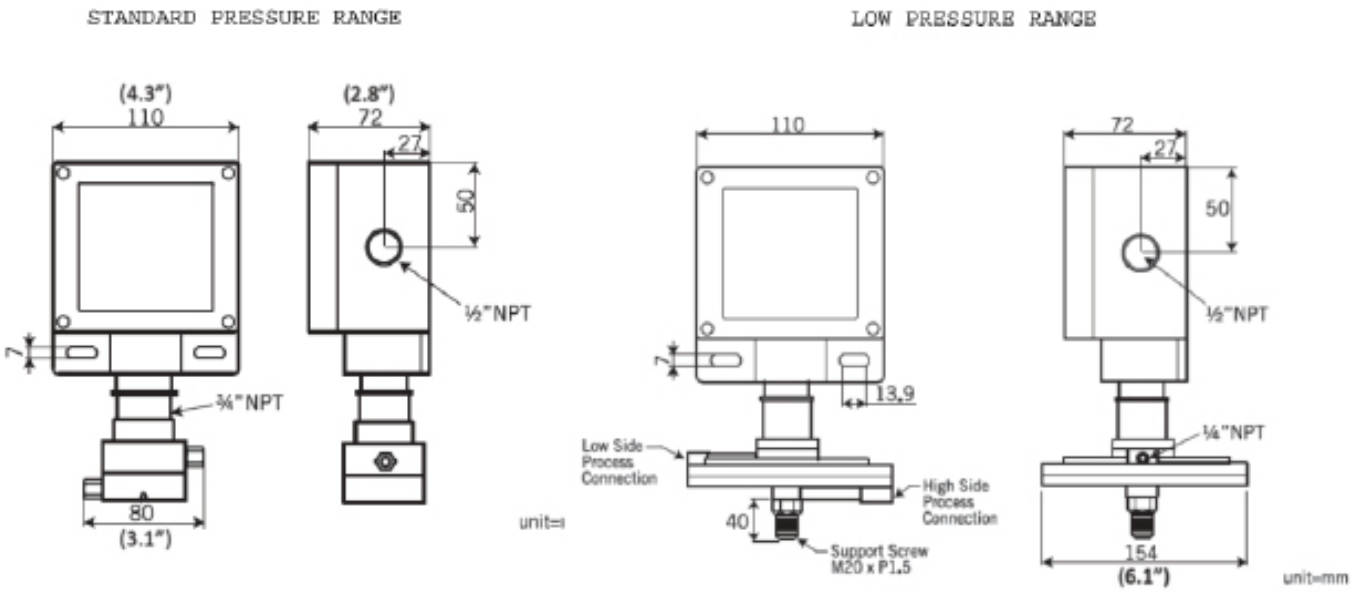


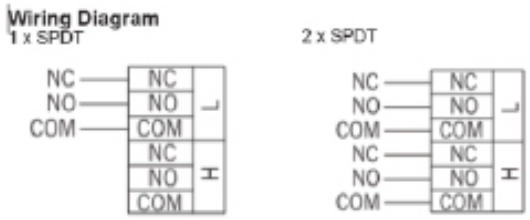


## Engineering Code (how to order)

| | | Pressure Range | | Deadband | Proof Pressure PSI | 5WPS - | | - | | - | | - | | - | | - | |
|---|---|---|---|---|---|---|---|---|---|---|---|---|---|---|---|---|---|
| **SERIES** | | | | | | | | | | | | | | | | | |
| **PRESSURE RANGES PSI** | | Min | Max | | | | | | | | | | | | | | |
| | | 3 | 28 | 0.15-1.4 | 1,000 | | 0 1 0 | | | | | | | | | | |
| | | 7 | 100 | 0.35-5 | 1,000 | | 0 2 0 | | | | | | | | | | |
| | | 35 | 200 | 1.75-10 | 1,000 | | 0 3 0 | | | | | | | | | | |
| | | 50 | 500 | 2.5-25 | 1,000 | | 0 4 0 | | | | | | | | | | |
| Low Pressure Ranges, mmH2O | | 400 | 1,900 | 30-80 | 750 | 5WPSL - | 2 4 0 | | | | | | | | | | |
| | | 1,000 | 10,000 | 70-200 | 750 | | 4 0 0 | | 6 | | | | | | | | |
| **WETTED PARTS** | 316 Stainless Steel, diaphragm welded (standard) | | | | | | | | | | | | | | | | |
| | 316 Stainless Steel & Tatanium (low pressure, standard) | | | | | | | | | | | | | | | | |
| **PROCESS CONNECTION** | 1/4" NPT Female (standard) | | | | | | | | | | F 4 | | | | | | |
| | 1/4" BSP Female | | | | | | | | | | B 4 | | | | | | |
| | 1/4" PT Female | | | | | | | | | | P 4 | | | | | | |
| **CONDUIT CONNECTION** | 3/4" NPT Female | | | | | | | | | | | | F 3 | | | | |
| | 1/2" NPT Female (standard) | | | | | | | | | | | | F 2 | | | | |
| | M20 X P1.5 | | | | | | | | | | | | M 2 | | | | |
| **SWITCH TYPE** | Micro Switch, 1 x SPDT | | | | | | | | | | | | | 0 1 | | | |
| | Micro Switch, 2 x SPDT (one setpoint) | | | | | | | | | | | | | 0 2 | | | |
| | Gold Contact, 1 x SPDT | | | | | | | | | | | | | 3 A | | | |
| | Gold Contact, 2 x SPDT (one setpoint) | | | | | | | | | | | | | 3 B | | | |
| **OPTIONS** | Custom Pressure Scale (R1=psi, R2=kPa, R3=kg/cm2, R4=cmH2O, R5=ftH2O, R6=inHg, R7=mmHg, R8=inH2O, R9=ozIN2, R10=ATM, R11=bar, R12=mbar, R13=MPa, R14=mH2O, R15=mmH2O, R16=Pa) | | | | | | | | | | | | | | | R X X X | |
| | Customer Specific (Numbers from Z01 to Z999) | | | | | | | | | | | | | | | Z # # # | |

# 10WPS & 10WPSL Explosion Proof Differential Pressure Switch





## Description & Features:

- Heavy-duty, explosion-proof, differential pressure switch
- Low pressure to 300 psi
- High current ratings for 1 x SPDT or 2 x SPDT switches
- Fixed deadband
- Die cast aluminum construction with welded seal
- 1% accuracy
- IP68 rated including Hermetically sealed option
- cULus listed and RU recognized
- CRN registered
- 5 year warranty

## Applications:

- Suitable for differential pressure applications in hazardous areas including filter monitoring and control

Switches with UL & CSA Recognized and File No. E12252.

c UL us LISTED

CRN CANADIAN REGISTRATION NUMBER

| Specifications | |
|---|---|
| **Housing** | Heavy-duty die-cast aluminum, blue colour |
| **Accuracy** | +/- 1% of the adjustable set-point range |
| **Pressure Connection** | Female 1/4" NPT, BSP |
| **Electrical Connection** | Female 1/2" or 3/4" NPT, M20xP1.5 |
| **Wetted Parts** | Low pressure ranges - 316 Stainless Steel welded & Titanium<br>High pressure ranges - 316 Stainless Steel welded |
| **Set Point Adjustment** | Field selectable |
| **Deadband** | Fixed, see Order Codes |
| **Contact Ratings** | Fixed Deadband:<br>15A @ 125/250VAC, 0.4A @ 125VDC, 3A @ 30VDC<br>Hermetically sealed switch 5A @ 250VAC<br>Gold contact microswitch 1A @ 125/250VAC |
| **No. of Contacts** | 1 x SPDT or 2 x SPDT |
| **Ambient/Process Temperature** | -30 to 205 deg C (-22 to 400 deg F) |
| **Enclosure Rating** | IP68<br>Protection from dust ingress and submersion in fresh water to a maximum depth of 1.5 metres for up to 30 minutes |
| **Approvals** | cULus listed, Class I Divison 1 Groups A, B, C & D; Class II Divison 1 Groups E, F & G (housing)<br>RU recognized, file no E12252 (switch)<br>CRN registered |
| **Weight** | 7.5 lbs (3.4 kg) |

# Explosion Proof Differential Pressure Switch



## Order Codes

| Adjustable Range PSI | Dead Band PSI | Proof Pressure PSI | 3/4" NPT Electrical |
|---|---|---|---|
| | | | 1/4" NPT Process |
| 400-1,900 mmH20 (15.7-74.8" H2O) | 30-80 mmH2O (1.2-3.1" H2O) | 500 | 10WPSL240AF4F301U |
| 1,000-10,000 (39.4-393.7" H2O) | 70-200 mmH2O (2.8-7.9" H2O) | 500 | 10WPSL4006AF4F301U |
| 3-28 | 0.015-0.3 | 1,000 | 10WPS0106F4F301U |
| 7-100 | 0.2-0.5 | 1,000 | 10WPS0206F4F301U |
| 35-200 | 0.3-0.6 | 1,000 | 10WPS0306F4F301U |
| 50-300 | 0.3-0.8 | 1,000 | 10WPS0406F4F301U |

## Dimensions

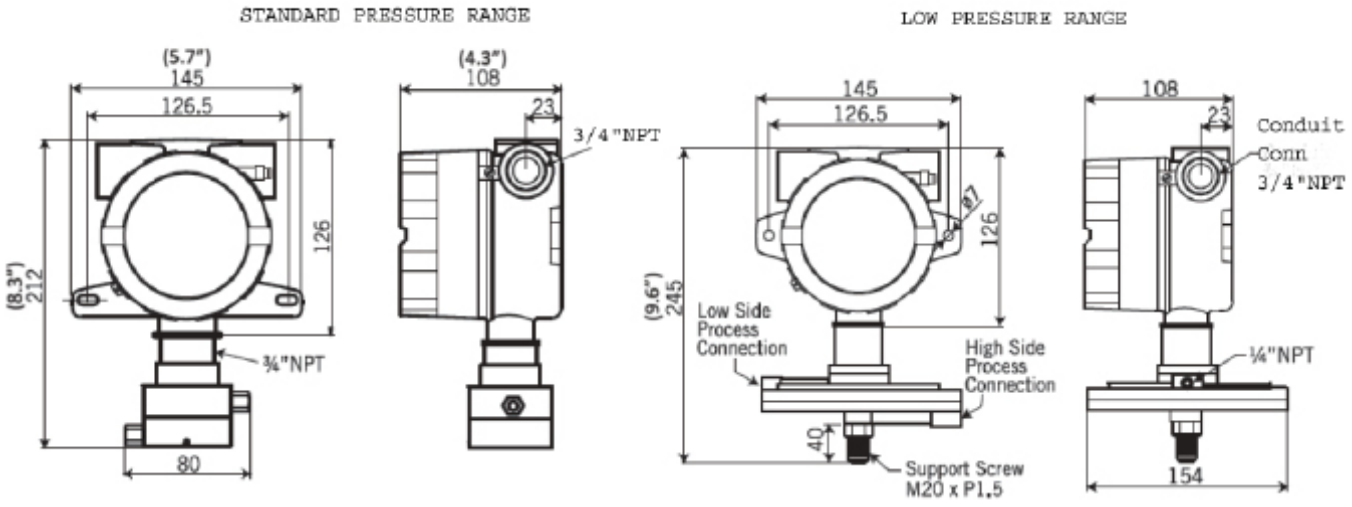


### Wiring Schematic

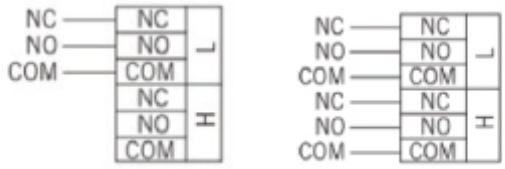

# Explosion Proof Differential Pressure Switch



## Engineering Codes

**SERIES**

**PRESSURE RANGES PSI**

| | Pressure Range Min | Pressure Range Max | Deadband | Proof Pressure PSI | Code |
|---|---|---|---|---|---|
| | 3 | 28 | 0.15-1.4 | 1,000 | 010 |
| | 7 | 100 | 0.35-5 | 1,000 | 020 |
| | 35 | 200 | 1.75-10 | 1,000 | 030 |
| | 50 | 500 | 2.5-25 | 1,000 | 040 |
| Low Pressure Ranges, mmH2O | 400 | 1,900 | 30-80 | 750 | 10WPSL-240 |
| | 1,000 | 10,000 | 70-200 | 750 | 400 |

**WETTED PARTS**

316 Stainless Steel, diaphragm welded (standard) — 6
316 Stainless Steel & Tatanium (low pressure, standard)

**PROCESS CONNECTION**

1/4" NPT Female (standard) — F4
1/4" BSP Female — B4
1/4" PT Female — P4

**CONDUIT CONNECTION**

3/4" NPT Female (standard) — F3
1/2" NPT Female — F2
M20 X P1.5 — M2

**SWITCH TYPE**

Micro Switch, 1 x SPDT — 01
Micro Switch, 2 x SPDT (one setpoint) — 02
Gold Contact, 1 x SPDT — 3A
Gold Contact, 2 x SPDT (one setpoint) — 3B
Hermetically Sealed Switch, 1 x SPDT — 4A
Hermetically Sealed Switch, 2 x SPDT (one setpoint) — 4B

**HOUSING MATERIAL**

cULus Listed, Hazardous locations — U

**OPTIONS**

Custom Pressure Scale (R1=psi, R2=kPa, R3=kg/cm2, R4=cmH2O, R5=ftH2O, R6=inHg, R7=mmHg, R8=inH2O, R9=ozIN2, R10=ATM, R11=bar, R12=mbar, R13=MPa, R14=mH2O, R15=mmH2O, R16=Pa) — RXXX

Customer Specific (Numbers from Z01 to Z999) — Z###

# DPG Digital Pressure Gauge




## Description & Features:

- Simple 2 button operation
- Reset to zero feature
- Backlight turns on when on/off button is pressed
- Option for display to remain continuously on
- Continuous peak pressure indication option
- 316L welded diaphragm seal
- Rubber boot is standard
- ASME B40.100 compliant
- ±1% accuracy
- 5 year warranty

## Applications:

- Ideal for commercial and industrial application in both test measurement and general purpose installations

| Specifications | |
|---|---|
| **Case Size** | 2.5” (63mm) |
| **Case Material** | ABS |
| **Rubber Boot** | Silicone rubber |
| **LCD Display** | 2” x 3/4” (48mm x 16mm) |
| **Connection** | 1/4” NPT 304SS |
| **Sensor** | 316L welded, Piezo |
| **Operating Life** | 1 million cycles |
| **Power Supply** | 2 x AAA battery (1.5V) |
| **Battery Life** | 2 yrs (auto shut-off mode) |
| **Power Mode** | Auto or manual shut-off |
| **Display Digits** | 4 digits to 5,000 psi<br>5 digits for 10,000 psi and 15,000 psi |
| **Pressure Unit Selection** | psi, $mH_2O$, mmHg, mbar, kPa ranges ≤ 100 psi<br>psi, bar, $kgf/cm^2$, MPa, atm ranges ≥ 160 psi |
| **Response Time** | ≤ 3 Hz display refresh rate |
| **Proof / Burst Pressure** | 200% / 300% FS |
| **Operating / Storage Temperature** | 14ºF to 122ºF (-10ºC to 50ºC)<br>-4ºF to 167ºF (-20ºC to 75ºC) |
| **Accuracy** | ±1% |
| **Enclosure Rating** | IP60 |

## Order Codes (products in bold are normally stock in North America)

| Dial Size | 2.5” (63mm) |
|---|---|
| **Connection** | **1/4” Bottom** |
| **Socket** | **SS** |
| -15 psi | DPG210 |
| -15/0/15 psi | DPG203 |
| -15/0/30 psi | DPG204 |
| -15/0/60 psi | DPG205 |
| -15/0/100 psi | DPG206 |
| -15/0/150 psi | DPG207 |
| -15/0/200 psi | DPG208 |
| -15/0/300 psi | DPG209 |
| 0/15 psi | DPG211 |
| 0/30 psi | DPG212 |
| 0/60 psi | DPG213 |
| 0/100 psi | **DPG214** |
| 0/160 psi | DPG215 |
| 0/200 psi | DPG216 |
| 0/300 psi | **DPG217** |
| 0/600 psi | DPG218 |
| 0/1,000 psi | **DPG219** |
| 0/1,500 psi | DPG220 |
| 0/2,000 psi | DPG221 |
| 0/3,000 psi | **DPG222** |
| 0/5,000 psi | **DPG223** |
| 0/10,000 psi | **DPG224** |
| 0/15,000 psi | **DPG225** |

Other ranges and connection sizes available upon request. For scale change, refer to How to Order Guide for scale codes.

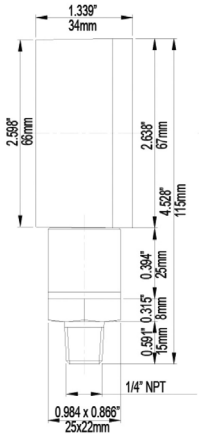


Without Rubber Boot

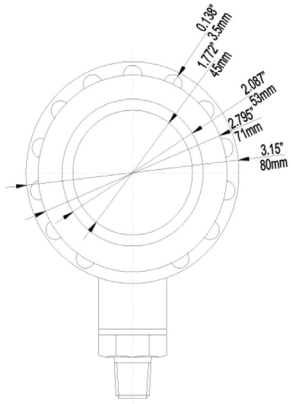


With Rubber Boot

# DPG+ High Precision Digital Pressure Gauge with Bluetooth






## Description & Features:

- Sophisticated, highly accurate, digital pressure gauge
- Bluetooth function for datalogging, including exporting function
- Available ranges from very low pressure up to 15,000 psi (1,000) Bar)
- Temperature sensor included to record ambient temperature
- ±0.05%, 0.1% and 0.5% accuracies available
- IP65 for complete protection against dust and water
- Complete visual orientation with 330 degree dial rotation
- Powered by 3 x AAA batteries, with more than 1 year of operating life
- 5 year warranty

## Applications:

- Designed to be used for calibration and testing of pressure instruments in workshops, repair facilities, laboratories or in the field

| Specifications | |
|---|---|
| Case | 3.3” (85mm) with 330 degree rotation |
| Case Material | Cast Zinc with protective silicone rubber boot |
| Accuracy | 0.05%, 0.1%, 0.5% full scale |
| Long Term Stability | Better than 0.05% FS per year |
| LCD Display | Large 2" x 1 3/8" (51mm x 36mm) with integrated backlight |
| Communication | Integrated Bluetooth for pairing between DPG Plus and mobile App |
| Mobile Application (iOS & Android) | App functionality includes monitoring, recording (data logging) and exporting of data |
| Connection | 1/4" NPT, 1/2" NPT, G1/4, G1/2, M12x1.5, bottom (lower mount) connection only |
| Power Supply | 3 x AAA Batteries or USB powered |
| Battery Life | The 3 x AAA Batteries, with ultra-low power consumption design, will provide a maximum battery life of more than 1 year |
| Power Mode | Automatic or manual shut-off (Automatic = if the unit is not sensing continuous pressure or being programmed) |
| Electrical Protection | Electromagnetic interference design |
| Display Units | 6 digits plus Percentage Bar, Number of Recordings, Pressure Unit, Pressure Value, Battery Power, Bluetooth Symbol, Temperature Value, Maximum Pressure Reading |
| Key Functions | Power ON/OFF, Backlight, Clear / Re-zero, Unit Switching, Maximum Pressure Reading, Temperature Display, Data Recording, Expert / Factory Mode |
| Operating Temperature | -5ºC to 40ºC / 23ºF to 104ºF |
| Pressure Unit Selection | 12 engineered units available: PSI, inHG, inH2O, inWC, atm, torr, BAR, mBAR, mH2O, Mpa, kgf, Pa |
| Response Time | 1 to 10 times per second |
| Overload Pressure | 200% ≤ 1,450 psi and 150% > 1,450 psi |
| Wetted Parts | 304SS |
| Enclosure Rating | IP65 |
| Product Accessories | Durable case with insulation, USB cable |

## Order Codes (products in bold are normally stock in North America)

| Dial Size 85mm (3.4”) | | |
|---|---|---|
| Accuracy 0.1% Full Scale | | |
| Process Connection, Bottom | 1/4” NPT | 1/2” NPT |
| -15 psi | DPG3P01N4 | DPG3P01N2 |
| -15/0/15 psi | DPG3P02N4 | DPG3P02N2 |
| -15/0/30 psi | DPG3P03N4 | DPG3P03N2 |
| -15/0/60 psi | DPG3P04N4 | DPG3P04N2 |
| -15/0/100 psi | DPG3P05N4 | DPG3P05N2 |
| -15/0/150 psi | DPG3P06N4 | DPG3P06N2 |
| -15/0/200 psi | DPG3P07N4 | DPG3P07N2 |
| -15/0/300 psi | DPG3P29N4 | DPG3P29N2 |
| 0/1 psi | DPG3P08N4 | DPG3P08N2 |
| 0/5 psi | DPG3P09N4 | DPG3P09N2 |
| 0/15 psi | DPG3P10N4 | DPG3P10N2 |
| 0/30 psi | DPG3P11N4 | DPG3P11N2 |
| 0/60 psi | DPG3P12N4 | DPG3P12N2 |
| 0/100 psi | DPG3P13N4 | DPG3P13N2 |
| 0/160 psi | DPG3P14N4 | DPG3P14N2 |
| 0/200 psi | DPG3P15N4 | DPG3P15N2 |
| 0/300 psi | DPG3P16N4 | DPG3P16N2 |
| 0/600 psi | DPG3P17N4 | DPG3P17N2 |
| 0/800 psi | DPG3P18N4 | DPG3P18N2 |
| 0/1,000 psi | DPG3P19N4 | DPG3P19N2 |
| 0/1,500 psi | DPG3P20N4 | DPG3P20N2 |
| 0/2,000 psi | DPG3P21N4 | DPG3P21N2 |
| 0/3,000 psi | DPG3P22N4 | DPG3P22N2 |
| 0/4,000 psi | DPG3P23N4 | DPG3P23N2 |
| 0/5,000 psi | DPG3P24N4 | DPG3P24N2 |
| 0/6,000 psi | DPG3P25N4 | DPG3P25N2 |
| 0/7,500 psi | DPG3P26N4 | DPG3P26N2 |
| 0/10,000 psi | DPG3P27N4 | DPG3P27N2 |

# DPG+ High Precision Digital Pressure Gauge with Bluetooth

## Dimensions

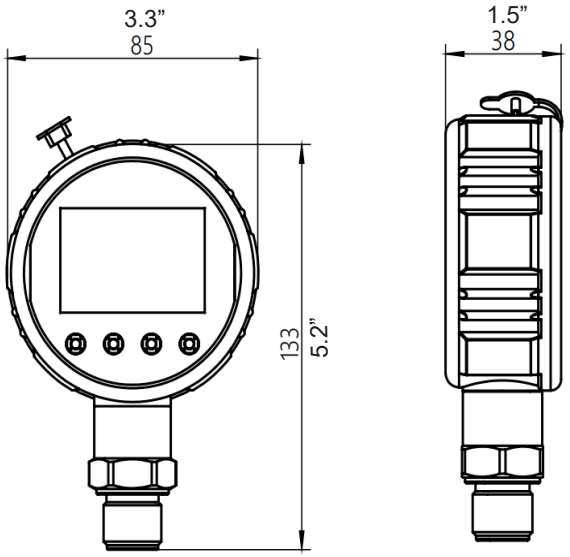


## Engineering Codes

| DPG+ OPTIONS | | L X P - ☐ - ☐☐☐ - ☐ - ☐ - ☐☐ - ☐ - ☐ - ☐☐☐ |
|---|---|---|
| **CASE SIZE** | 85mm (3.3") | 3 |
| **SERIES PRESSURE RANGE - PSI** | -15 (-1/0) | P 0 1 |
| | -15 /0/15 (-1/0/1) | P 0 2 |
| | -15 /0/30 (-1/0/2) | P 0 3 |
| | -15 /0/60 (-1/0/4) | P 0 4 |
| | -15 /0/100 (-1/0/6) | P 0 5 |
| | -15 /0/150 (-1/0/10) | P 0 6 |
| | -15 /0/200 (-1/0/14) | P 0 7 |
| | 1 | P 0 8 |
| | 5 | P 0 9 |
| | 15 | P 1 0 |
| | 30 | P 1 1 |
| | 60 | P 1 2 |
| | 100 | P 1 3 |
| | 150 | P 1 4 |
| | 200 | P 1 5 |
| | 300 | P 1 6 |
| | 600 | P 1 7 |
| | 800 | P 1 8 |
| | 1,000 | P 1 9 |
| | 1,500 | P 2 0 |
| | 2,000 | P 2 1 |
| | 3,000 | P 2 2 |
| | 4,000 | P 2 3 |
| | 5,000 | P 2 4 |
| | 6,000 | P 2 5 |
| | 7,500 | P 2 6 |
| | 10,000 | P 2 7 |
| | 15,000 (only available for 0.2% accuracy) | P 2 8 |
| | Custom Pressure Range (Numbers from P01 to P99) | P X X |
| **PRESSURE** | Gauge (standard) | G |
| | Absolute (0-5 to 150 PSI ranges only) | A |
| **ACCURACY** | 0.2% Full Scale | 2 |
| | 0.1% Full Scale (standard) | 1 |
| | 0.05% Full Scale | 4 |
| **MECHANICAL CONNECTION** | 1/4" NPT | N 4 |
| | 1/2" NPT | N 2 |
| | G1/4" | G 4 |
| | G1/2" | G 2 |
| | M20 * 1.5 M | M 2 |
| | Special Connection | ? ? |
| **PRESSURE PORT** | 304SS (standard) | 4 |
| **DIAPHRAGM** | 304SS Welded (standard) | 4 |
| **SPECIAL** | Pressure Range (R1=psi (standard), R2=kPa, R3=kg/cm2, R4=cmH2O, R5=ftH2O, R6=inHg, R7=mmHg, R8=inH2O, R9=R10=ATM, R11=bar, R12=mbar, R13=MPa, R14=mH2O, R15=mmH2O, R16=Pa) | R # # |
| | Customer Specific (Numbers from Z01 to Z99) | Z # # |

# LE1 OEM Transmitter



## Description & Features:

- Developed for OEM applications
- Compact stainless steel construction with ceramic or silicone sensor
- Available ranges include vacuum, compound up to 2,000 psi (160 bar)
- Wide range of mechanical and electrical connections
- ±0.5% accuracy
- IP65 and IP67 enclosure ratings
- CE approved
- 5 year warranty

## Applications:

- Suitable for all process and automation control, hydraulics and pneumatic sensing, pump and compressor monitoring, refrigeration and HVAC

| Specifications | |
|---|---|
| **Output Signal** | Standard 2-wire: 4-20 mA / Vs = 12-30 Vdc / Vac<br>Optional 3-wire: 0.5-4.5 Vdc / Vs = 10-30 Vdc |
| **Accuracy** | ±0.5% FSO |
| **Response Time** | <10 ms |
| **Insulation** | >100 MΩ @ 50V |
| **Permissible Temperatures** | Operating: -40°F to 212°F (-40°C to 100°C)<br>Compensating: 14°F to 176°F (-10°C to 80°C) |
| **Pressure Port / Housing** | 304 SS |
| **Wetted Parts** | Seals: NBR<br>Diaphragm: Ceramic (standard ranges), Silicone (Vac, Compound up to 30 psi) |
| **Current Consumption** | 2-wire: 25 mA max<br>3-wire voltage: 5 mA (short-circuit current 20 mA) |
| **EMC** | EMI: EN50081-1/-2<br>EMS: EN50082-2 |
| **Stability** | Vibration: 10 g / 5 Hz to 200 Hz<br>Shock: 20 g / 11 ms |
| **Operation Life** | 2 M cycles |
| **Approval** | CE, RoHS |

## Order Codes (products in bold are normally stock in North America)

| Range | Over-pressure | Burst Pressure | Code |
|---|---|---|---|
| 30"/0 hg | 5 psi | 15 psi | LE10VC |
| 30"/0/15 psi | 22.5 psi | 45 psi | LE10015 |
| 30"/0/30 psi | 45 psi | 90 psi | LE10030 |
| 30"/0/60 psi | 75 psi | 150 psi | LE10060 |
| 30"/0/100 psi | 150 psi | 300 psi | LE10100 |
| 30"/0/150 psi | 225 psi | 450 psi | LE10150 |
| 0/15 psi | 23 psi | 45 psi | LE115 |
| 0/30 psi | 45 psi | 120 psi | LE1030 |
| 0/60 psi | 90 psi | 180 psi | LE160 |
| 0/100 psi | 150 psi | 300 psi | LE1100 |
| 0/160 psi | 225 psi | 450 psi | LE1150 |
| 0/200 psi | 300 psi | 600 psi | LE1200 |
| 0/230 psi | 345 psi | 690 psi | LE1230 |
| 0/300 psi | 450 psi | 900 psi | LE1300 |
| 0/500 psi | 750 psi | 1,500 psi | LE1500 |
| 0/1,000 psi | 1,500 psi | 3,000 psi | LE11000 |
| 0/2,000 psi | 3,000 psi | 6,000 psi | LE12000 |

| Range | Over-pressure | Burst Pressure | Code |
|---|---|---|---|
| -1/0 bar | 0.3 bar | 1 bar | LE10VCR11 |
| -1/0/1 bar | 1.5 bar | 3 bar | LE10015R11 |
| -1/0/2 bar | 3 bar | 6 bar | LE10030R11 |
| -1/4 bar | 6 bar | 12 bar | LE10060R11 |
| -1/6 bar | 9 bar | 18 bar | LE10100R11 |
| -1/10 bar | 15 bar | 30 bar | LE10150R11 |
| 0/1 bar | 2 bar | 3 bar | LE115R11 |
| 0/2 bar | 3 bar | 8 bar | LE1030R11 |
| 0/4 bar | 6 bar | 12 bar | LE160R11 |
| 0/6 bar | 9 bar | 18 bar | LE1100R11 |
| 0/10 bar | 15 bar | 30 bar | LE1150R11 |
| 0/16 bar | 24 bar | 48 bar | LE1200R11 |
| 0/25 bar | 38 bar | 75 bar | LE1300R11 |
| 0/40 bar | 60 bar | 120 bar | LE1500R11 |
| 0/60 bar | 90 bar | 180 bar | LE11000R11 |
| 0/100 bar | 150 bar | 300 bar | LE12000R11 |
| 0/160 bar | 240 bar | 480 bar | LE13000R11 |

# LE1 OEM Transmitter

## Dimensions

### All Other Ranges

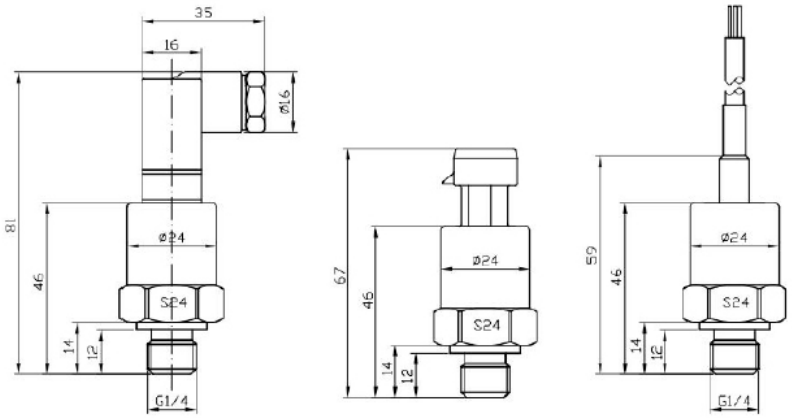


### Vacuum, Compound to 30 psi

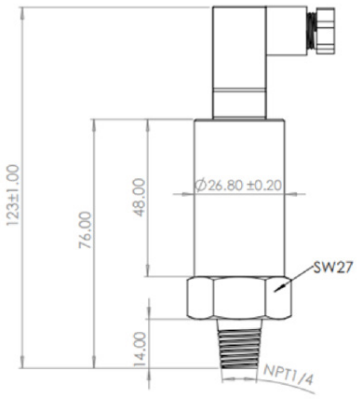


## Wiring Diagram

### Micro

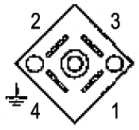


### Packard

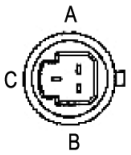


### Cable Leads

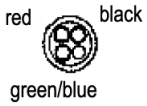


### M12




| Micro | | | Packard | | | Cable Leads | | | M12 | | |
|---|---|---|---|---|---|---|---|---|---|---|---|
| Pin#: | 2-wire (current): | 3-wire (voltage): | Pin #: | 2-wire (current): | 3-wire (voltage): | Cable Colours: | 2-wire (current): | 3-wire (voltage): | Pin #: | 2-wire (current) | 3-wire (voltage) |
| 1 | Vcc | Vcc | A | No Connection | Ground | Red | Vcc | Vcc | 1 | Supply+ | Supply+ |
| 2 | Iout | Ground | B | Vcc | Vcc | Green/Blue | Iout | Vout | 2 | Signal- | Supply- |
| 3 | No Connection | Vout | C | Iout | Vout | Black | No Connection | Ground | 3 | - | Signal+ |
| 4 | Shield | Shield | - | - | - | Yellow | Shield | Shield | 4 | - | - |

## Engineering Codes

LE1 - [ ] - [ ][ ] - [ ][ ] - [ ][ ] - [ ][ ] - [ ][ ] - [ ][ ] - [ ][ ][ ]

| LE1 Engineering Codes | | |
|---|---|---|
| **OUTPUT** | 4…20 mA, 2-wire / Vdc POWER SUPPLY | 1 |
| | 4…20 mA, 2-wire / Vac POWER SUPPLY | 2 |
| | 0.5-4.5 Vdc, 3-wire / Vdc POWER SUPPLY | 7 |
| | OTHER OUTPUT TYPE, SPECIFY | X |
| **ELECTRICAL CONNECTION** | MINI-DIN 43650 TYPE-C, IP65 | C 1 |
| | CABLE OUTLET, PVC SHIELDED, 1 METER, IP66 | T R |
| | M12 circular male connector, IP67 | M 0 |
| | Packard (compact), IP65 | M 1 |
| | OTHER MATERIAL, SPECIFY | X X |
| **SERIES PRESSURE RANGE (PSI)** | 30"/0 HG (-1/0 BAR) | 1 V |
| | 30"-0-15 PSI | 2 V |
| | 30"-0-30 PSI | 3 V |
| | 30"-0-60 PSI | 4 V |
| | 30"-0-100 PSI | 5 V |
| | 30"-0-150 PSI | 6 V |
| | 30"-0-200 PSI | 7 V |
| | 30"-0-300 PSI | 8 V |
| | 0-15 PSI | 4 P |
| | 0-30 PSI | 6 P |
| | 0-60 PSI | 9 P |
| | 0-100 PSI | 2 S |
| | 0-160 PSI | 3 S |
| | 0-200 PSI | 4 S |
| | 0-230 PSI | 5 S |
| | 0-300 PSI | 6 S |
| | 0-500 PSI | 8 6 |
| | 0-725 PSI | 1 T |
| | 0-1,000 PSI | 3 T |
| | 0-1,500 PSI | 4 T |
| | 0-2,000 PSI | 5 T |
| | OTHER PRESSURE RANGE, SPECIFY | # # |
| **ACCURACY** | 0.5% | 5 D |
| **PROCESS CONNECTION** | 1/4" NPT Male | N 4 |
| | 1/8" NPT Male | N 8 |
| | 1/4" G Male | G 4 |
| | 1/8" G Male | G 8 |
| **SEAL** | CERAMIC DIAPHRAGM WITH NBR O-RING > (30 TO 2,000 PSI) | C B |
| | SILICONE DIAPHRAGM WITH NBR O-RING (VAC, COMPOUND TO 30 PSI) | S B |
| **SPECIAL** | PSI pressure range (standard, no need to include) | R 1 |
| | BAR pressure range | R 1 1 |
| | Additional 6 ft (2m) PVC cable | C L 1 |
| | Additional 10 ft (3m) PVC cable | C L 2 |
| | Additional 15 ft (4.5m) PVC cable | C L 3 |
| | Special | Z # # |

# LE3 General Purpose Transmitter



## Description & Features:

- Developed for use in general industry and OEM applications, where versatility and low cost are requirements
- Compact stainless steel construction with ceramic sensor
- Available ranges include 25-7,500 psi
- Wide range of mechanical and electrical connections
- ±0.5% accuracy
- IP65 and IP67
- Built-in restrictor screw on ranges >1,500 psi
- UL listed or UL recognized for USA and Canada
- 5 year warranty

## Applications:

- Suitable for all process and automation control, hydraulics and pneumatic sensing, pump and compressor monitoring, refrigeration and HVAC

| Specifications | |
|---|---|
| **Output Signal** | 4…20 mA, 2-wire / Vs = 8-33 Vdc<br>0…10 Vdc, 3-wire / Vs = 12-33 Vdc<br>1...5 Vdc, 3-wire / Vs = 7-33 Vdc<br>0.5...4.5 Vdc, 3-wire, ratiometric output / Vs = 4.5-5.5 Vdc (UL listing not included) |
| **Response Time** | 4…20 mA = 3 ms, all others = 5 ms |
| **Current Consumption** | 4…20 mA = 22 mA maximum, all others = 15 mA maximum |
| **Accuracy** | ±0.5% Full Scale Output, ±0.6% FSO for ranges greater and equal to 4,000 psi0+ |
| **Long-Term Stability** | ±0.2% FSO (typically per year) |
| **Wetted Parts** | 316SS Pressure port, Ceramic sensor with Viton O-ring |
| **Shock** | 50 g's 11 ms, MIL-STD 202 Method 213 G |
| **Vibration** | 15 g's 10 to 2,000 Hz, MIL-STD 202 |
| **Storage Temperature** | -40 to 100 deg C (-40 to 212 deg F) |
| **Media Temperature** | -40 to 120 deg C (-40 to 248 deg F) |
| **Reverse Polarity Protection** | Yes |
| **EMI-EMC Compliance** | IEC 61000 4-2 to 4-6, IEC 61326-1 Class A |
| **Enclosure Rating** | NEMA 4X; IP65 or IP67 |
| **Approvals** | UL listed or UL recognized for USA and Canada, see pressure ranges |
| **Compliance** | RoHS, REACH, CE |
| **Operation Life** | 1 million cycles, minimum |
| **Weight** | 120 g (4.23 oz) |

| ELECTRICAL CONNECTIONS | | | | | | | | |
|---|---|---|---|---|---|---|---|---|
| ELECTRICAL SIGNAL | ELECTRICAL TERMINATION | | | | | | | |
| | Cable Outlet | | Metripack 3-Pin Deutsch | | M12 DIN 43650 A & C | | 4-Pin Deutsch | |
| | VOLTAGE | CURRENT | VOLTAGE | CURRENT | VOLTAGE | CURRENT | VOLTAGE | CURRENT |
| +EXCITATION | RED | RED | PIN 1 | PIN 1 | PIN 1 | PIN 1 | PIN 2 | PIN 2 |
| -EXCITATION (COMMON) | BLACK | BLACK | PIN 2 | PIN 2 | PIN 2 | PIN 2 | PIN 1 | PIN 1 |
| VOLTAGE OUTPUT | WHITE | - | PIN 3 | | PIN 3 | - | PIN 4 | |
| CASE GROUND/DRAIN/EARTH | DRAIN | DRAIN | | PIN 3 | PIN 4 | PIN 4 | PIN 3 | PIN 3 |

# LE3 General Purpose Transmitter

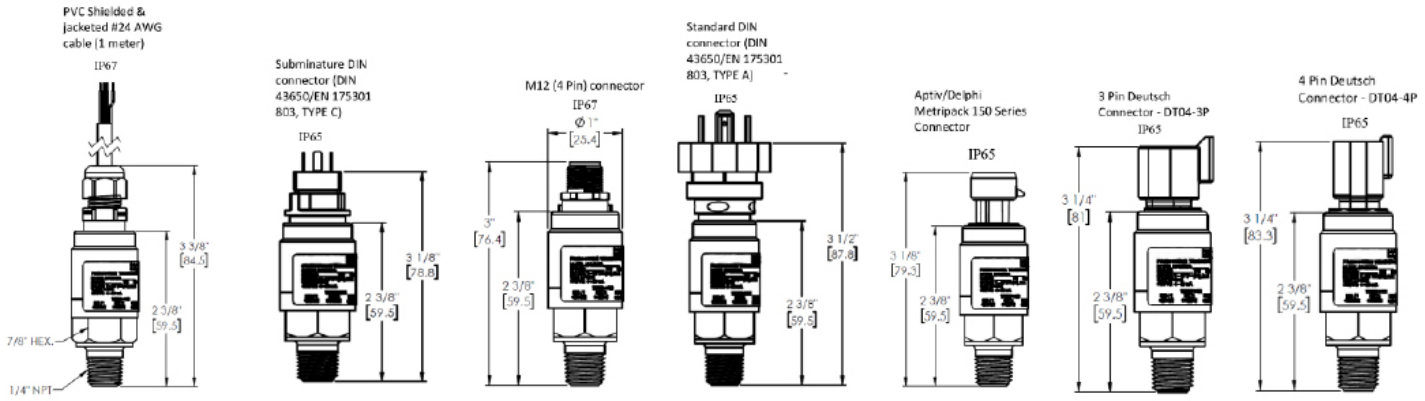


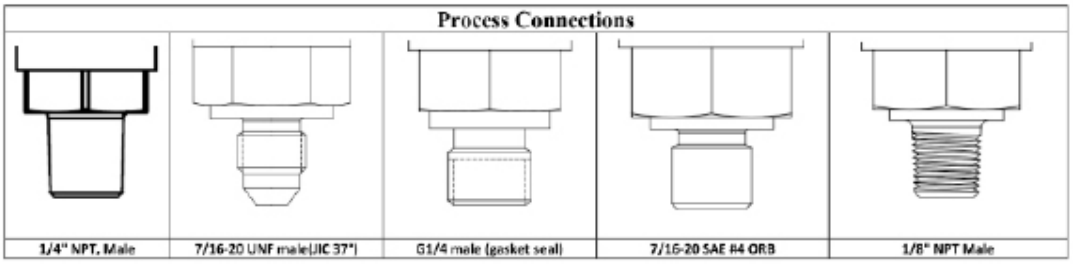


## Order Codes

| Range | Proof-Pressure (psi) | 4/20mA, Ceramic w/O-ring,1/4" NPT Process, 0.5% Acc* | |
|---|---|---|---|
| | | DIN 43650 A | Cable Outlet (1M /3') |
| 0-25 PSI (0-1.6 BAR), UL | 50 psi | LE31105P5GN4CVU | LE31TR5P5GN4CVU |
| 0-30 PSI (0-2 BAR), UL | 60 psi | LE31106P5GN4CVU | LE31TR6P5GN4CVU |
| 0-36 PSI (0-2.5 BAR), UL | 72 psi | LE31107P5GN4CVU | LE31TR7P5GN4CVU |
| 0-50 PSI (0-3 BAR), UL | 100 psi | LE31108P5GN4CVU | LE31TR8P5GN4CVU |
| 0-60 PSI (0-4 BAR), UL | 120 psi | LE31109P5GN4CVU | LE31TR9P5GN4CVU |
| 0-87 PSI (0-6 BAR), UL | 174 psi | LE31101S5GN4CVU | LE31TR1S5GN4CVU |
| 0-100 PSI (0-7 BAR), UL | 200 psi | LE31102S5GN4CVU | LE31TR2S5GN4CVU |
| 0-150 PSI (0-10 BAR), UL | 300 psi | LE31103S5GN4CVU | LE31TR3S5GN4CVU |
| 0-200 PSI (0-15 BAR), UL | 400 psi | LE31104S5GN4CVU | LE31TR4S5GN4CVU |
| 0-230 PSI (0-16 BAR), UL | 460 psi | LE31105S5GN4CVU | LE31TR5S5GN4CVU |
| 0-300 PSI (0-20 BAR), UL | 600 psi | LE31106S5GN4CVU | LE31TR6S5GN4CVU |
| 0-360 PSI (0-25 BAR), UL | 720 psi | LE31107S5GN4CVU | LE31TR7S5GN4CVU |
| 0-500 PSI (0-35 BAR), UL | 1,000 psi | LE31108S5GN4CVU | LE31TR8S5GN4CVU |
| 0-580 PSI (0-40 BAR), UL | 1,160 psi | LE31109S5GN4CVU | LE31TR9S5GN4CVU |
| 0-725 PSI (0-50 BAR), UL | 1,450 psi | LE31101T5GN4CVU | LE31TR1T5GN4CVU |
| 0-870 PSI (0-60 BAR), UL | 1,740 psi | LE31102T5GN4CVU | LE31TR2T5GN4CVU |
| 0-1,000 PSI (0-70 BAR), UL | 2,000 psi | LE31103T5GN4CVU | LE31TR3T5GN4CVU |
| 0-1,500 PSI (0-100 BAR), UL | 3,000 psi | LE31104T5GN4CVU | LE31TR4T5GN4CVU |
| 0-2,000 PSI (0-150 BAR), UL | 4,000 psi | LE31105T5GN4CVU | LE31TR5T5GN4CVU |
| 0-2300 PSI (0-160 BAR), UL | 4,600 psi | LE31106T5GN4CVU | LE31TR6T5GN4CVU |
| 0-3,000 PSI (0-200 BAR), UL | 6,000 psi | LE31107T5GN4CVU | LE31TR7T5GN4CVU |
| 0-3,600 PSI (0-250 BAR) | 7,200 psi | LE31108T5GN4CV | LE31TR8T5GN4CV |
| 0-4000 PSI (0-300 BAR) | 8,000 psi | LE31109T5GN4CV | LE31TR9T5GN4CV |
| 0-5,000 PSI (0-350 BAR) | 10,000 psi | LE31101U5GN4CV | LE31TR1U5GN4CV |
| 0-6,000 PSI (0-400 BAR) | 12,000 psi | LE31102U5GN4CV | LE31TR2U5GN4CV |
| 0-7500 PSI (0-520 BAR) | 15,000 psi | LE31103U5GN4CV | LE31TR3U5GN4CV |

## Series Number (how to order)

| LE3 Engineering Codes | | LE3 | - | | - | | | - | | | - | | | - | | | - | | | - | | | - | | |
|---|---|---|---|---|---|---|---|---|---|---|---|---|---|---|---|---|---|---|---|---|---|---|---|---|---|
| **OUTPUT** | 4…20 mA, 2-wire | | | 1 | | | | | | | | | | | | | | | | | | | | | |
| | 0…10 Vdc, 3-wire | | | 3 | | | | | | | | | | | | | | | | | | | | | |
| | 1...5 Vdc, 3-wire | | | 5 | | | | | | | | | | | | | | | | | | | | | |
| | 0.5...4.5 Vdc, 3-wire, ratiometric output (UL listing not included) | | | R | | | | | | | | | | | | | | | | | | | | | |
| **ELECTRICAL CONNECTION** | Cable Outlet, PVC Shielded & jacketed #24 AWG (1 meter), IP67, UL Listed | | | | | T | R | | | | | | | | | | | | | | | | | | |
| | Mini-DIN 43650 Type C, IP65, UL Recognized | | | | | C | 1 | | | | | | | | | | | | | | | | | | |
| | M12 circular male connector, IP67, UL Listed | | | | | M | 0 | | | | | | | | | | | | | | | | | | |
| | DIN 43650 Type A, IP65, UL Recognized | | | | | 1 | 0 | | | | | | | | | | | | | | | | | | |
| | Aptiv/Delphi Metripack 150 Series , IP65, UL Recognized | | | | | M | 1 | | | | | | | | | | | | | | | | | | |
| | Deutsch Connector 3-Pin, IP65, UL Recognized | | | | | D | 3 | | | | | | | | | | | | | | | | | | |
| | Deutsch Connector 4-pin, IP65, UL Recognized | | | | | D | 4 | | | | | | | | | | | | | | | | | | |
| **SERIES PRESSURE RANGE (PSI)** | 0-25 PSI (0-1.6 BAR), UL | | | | | | | 5 | P | | | | | | | | | | | | | | | | |
| | 0-30 PSI (0-2 BAR), UL | | | | | | | 6 | P | | | | | | | | | | | | | | | | |
| | 0-36 PSI (0-2.5 BAR), UL | | | | | | | 7 | P | | | | | | | | | | | | | | | | |
| | 0-50 PSI (0-3 BAR), UL | | | | | | | 8 | P | | | | | | | | | | | | | | | | |
| | 0-60 PSI (0-4 BAR), UL | | | | | | | 9 | P | | | | | | | | | | | | | | | | |
| | 0-87 PSI (0-6 BAR), UL | | | | | | | 1 | S | | | | | | | | | | | | | | | | |
| | 0-100 PSI (0-7 BAR), UL | | | | | | | 2 | S | | | | | | | | | | | | | | | | |
| | 0-150 PSI (0-10 BAR), UL | | | | | | | 3 | S | | | | | | | | | | | | | | | | |
| | 0-200 PSI (0-15 BAR), UL | | | | | | | 4 | S | | | | | | | | | | | | | | | | |
| | 0-230 PSI (0-16 BAR), UL | | | | | | | 5 | S | | | | | | | | | | | | | | | | |
| | 0-300 PSI (0-20 BAR), UL | | | | | | | 6 | S | | | | | | | | | | | | | | | | |
| | 0-360 PSI (0-25 BAR), UL | | | | | | | 7 | S | | | | | | | | | | | | | | | | |
| | 0-500 PSI (0-35 BAR), UL | | | | | | | 8 | S | | | | | | | | | | | | | | | | |
| | 0-580 PSI (0-40 BAR), UL | | | | | | | 9 | S | | | | | | | | | | | | | | | | |
| | 0-725 PSI (0-50 BAR), UL | | | | | | | 1 | T | | | | | | | | | | | | | | | | |
| | 0-870 PSI (0-60 BAR), UL | | | | | | | 2 | T | | | | | | | | | | | | | | | | |
| | 0-1,000 PSI (0-70 BAR), UL | | | | | | | 3 | T | | | | | | | | | | | | | | | | |
| | 0-1,500 PSI (0-100 BAR), UL | | | | | | | 4 | T | | | | | | | | | | | | | | | | |
| | 0-2,000 PSI (0-150 BAR), UL | | | | | | | 5 | T | | | | | | | | | | | | | | | | |
| | 0-2300 PSI (0-160 BAR), UL | | | | | | | 6 | T | | | | | | | | | | | | | | | | |
| | 0-3,000 PSI (0-200 BAR), UL | | | | | | | 7 | T | | | | | | | | | | | | | | | | |
| | 0-3600 PSI (0-250 BAR), UL | | | | | | | 8 | T | | | | | | | | | | | | | | | | |
| | 0-4000 PSI (0-300 BAR), UL | | | | | | | 9 | T | | | | | | | | | | | | | | | | |
| | 0-5,000 PSI (0-350 BAR), UL | | | | | | | 1 | U | | | | | | | | | | | | | | | | |
| | 0-6,000 PSI (0-400 BAR), UL | | | | | | | 2 | U | | | | | | | | | | | | | | | | |
| | 0-7500 PSI (0-520 BAR), UL | | | | | | | 3 | U | | | | | | | | | | | | | | | | |
| | 0-9000 PSI (0-600 BAR), UL | | | | | | | 4 | U | | | | | | | | | | | | | | | | |
| | 0-10,000 PSI (0-700 BAR) | | | | | | | 5 | U | | | | | | | | | | | | | | | | |
| **ACCURACY** | 0.5% Gauge pressure (±0.6% FSO for ranges >/= 4,000 psi) | | | | | | | | | 5 | G | | | | | | | | | | | | | | |
| **PROCESS CONNECTION** | 1/8" NPT male | | | | | | | | | | | N | 8 | | | | | | | | | | | | |
| | 1/4" NPT male | | | | | | | | | | | N | 4 | | | | | | | | | | | | |
| | G 1/4" male, gasket seal | | | | | | | | | | | G | 4 | | | | | | | | | | | | |
| | 7/16-20 UNF male (JIC 37°) | | | | | | | | | | | U | 7 | | | | | | | | | | | | |
| | 7/16-20 SAE #4 ORB | | | | | | | | | | | S | 7 | | | | | | | | | | | | |
| **SEAL** | Ceramic with Viton o-ring | | | | | | | | | | | | | C | V | | | | | | | | | | |
| **APPROVALS** | UL Approval (up to 3,000 psi only) | | | | | | | | | | | | | | | U | | | | | | | | | |
| **SPECIAL** | PSI pressure range (standard scale, do not need to include in p/n) | | | | | | | | | | | | | | | | | R | 1 | | | | | | |
| | BAR pressure range | | | | | | | | | | | | | | | | | R | 1 | 1 | | | | | |
| | Additional 6 ft (2m) PVC cable | | | | | | | | | | | | | | | | | C | L | 1 | | | | | |
| | Additional 10 ft (3m) PVC cable | | | | | | | | | | | | | | | | | C | L | 2 | | | | | |
| | Additional 15 ft (4.5m) PVC cable | | | | | | | | | | | | | | | | | C | L | 3 | | | | | |
| | Restrictor Screw (included >1,500 psi) | | | | | | | | | | | | | | | | | Z | 1 | 0 | | | | | |
| | Larger pressure port opening (0.125" / 3.2mm) | | | | | | | | | | | | | | | | | Z | 1 | 2 | | | | | |
| | Special | | | | | | | | | | | | | | | | | Z | # | # | | | | | |

# LIM Aggressive Media Transmitter



## Description & Features:

- Heavy-duty pressure transmitter with advanced digital electronics and high over-pressure protection
- Compact construction with 316 and 17-4 stainless steel
- Available ranges include Vacuum up to 10,000 psi
- Wide range of mechanical and electrical connections
- ±0.25% accuracy
- IP65 and IP67
- Built-in restrictor screw on ranges >1,500 psi
- UL listed or UL recognized for USA and Canada
- 5 year warranty

## Applications:

- Appropriate for pumps & compressors, hydraulic equipment, environmental monitoring, machine tool and presses, test equipment and much more

| Specifications | |
|---|---|
| **Output Signal** | 4…20 mA, 2-wire / Vs = 8-33 Vdc<br>0…10 Vdc, 3-wire / Vs = 12-33 Vdc<br>1...5 Vdc, 3-wire / Vs = 7-33 Vdc<br>0.5...4.5 Vdc, 3-wire, ratiometric output / Vs = 4.5-5.5 Vdc (UL listing not-included) |
| **Response Time** | 4…20 mA = 3 ms, all others = 5 ms |
| **Current Consumption** | 4…20 mA = 22 mA maximum, all others = 15 mA maximum |
| **Accuracy** | ±0.25% Full Scale Output |
| **Long-Term Stability** | ±0.2% FSO (typically per year) |
| **Wetted Parts** | 316SS all welded or 17-4 PH SS with NBR O-ring |
| **Shock** | 50 g's 11 ms, MIL-STD 202 Method 213 G |
| **Vibration** | 15 g's 10 to 2,000 Hz, MIL-STD 202 |
| **Storage Temperature** | -40 to 100 deg C (-40 to 212 deg F) |
| **Media Temperature** | -40 to 120 deg C (-40 to 248 deg F) |
| **Reverse Polarity Protection** | Yes |
| **EMI-EMC Compliance** | IEC 61000 4-2 to 4-6, IEC 61326-1 Class A |
| **Enclosure Rating** | NEMA 4X; IP65 or IP67 |
| **Approvals** | UL listed or UL recognized for USA and Canada, see pressure ranges |
| **Compliance** | RoHS, REACH, CE |
| **Operation Life** | 1 million cycles, minimum |
| **Weight** | 120 g (4.23 oz) |

| ELECTRICAL CONNECTIONS | | | | | | | | |
|---|---|---|---|---|---|---|---|---|
| ELECTRICAL SIGNAL | ELECTRICAL TERMINATION | | | | | | | |
| | Cable Outlet | | Metripack 3-Pin Deutsch | | M12 DIN 43650 A & C | | 4-Pin Deutsch | |
| | VOLTAGE | CURRENT | VOLTAGE | CURRENT | VOLTAGE | CURRENT | VOLTAGE | CURRENT |
| +EXCITATION | RED | RED | PIN 1 | PIN 1 | PIN 1 | PIN 1 | PIN 2 | PIN 2 |
| -EXCITATION (COMMON) | BLACK | BLACK | PIN 2 | PIN 2 | PIN 2 | PIN 2 | PIN 1 | PIN 1 |
| VOLTAGE OUTPUT | WHITE | - | PIN 3 | | PIN 3 | - | PIN 4 | |
| CASE GROUND/DRAIN/EARTH | DRAIN | DRAIN | | PIN 3 | PIN 4 | PIN 4 | PIN 3 | PIN 3 |

PVC Shielded & jacketed #24 AWG cable (1 meter)

IP67

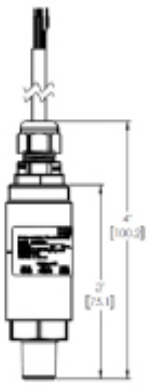

Subminature DIN connector (DIN 43650/EN 175301 803, TYPE C)

IP65

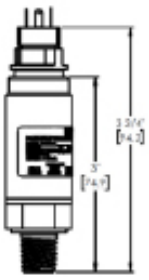

M12 (4 Pin) connector

IP67

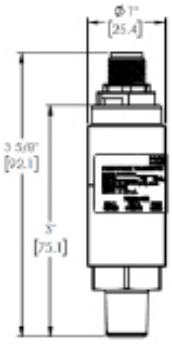

Standard DIN connector (DIN 43650/EN 175301 803, TYPE A)

IP65

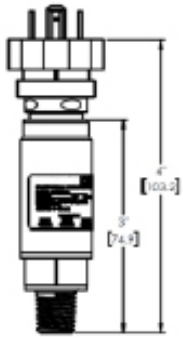

Aptiv/Delphi Metripack 150 Series Connector

IP65

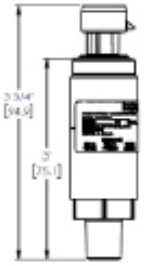

3 Pin Deutsch Connector - DT04-3P

IP65

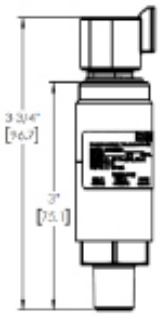

4 Pin Deutsch Connector - DT04-4P

IP65

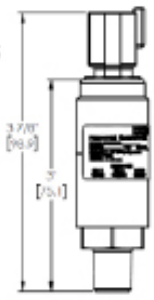

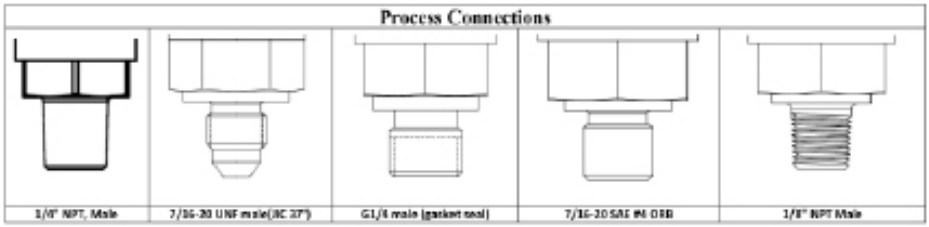

## Order Codes (products in bold are normally stock in North America)

| Range | Proof-Pressure (psi) | 4/20mA, 17-4 PH SS w/O-ring, 1/4" NPT Process, 0.25% Acc* | | 4/20mA, all 316SS welded, 1/4" NPT Process, 0.25% Acc | |
|---|---|---|---|---|---|
| | | DIN 43650 A | Cable Outlet (1M /3') | DIN 43650 A | Cable Outlet (1M /3') |
| 30" Hg(-1-0 BAR), UL | 2 psi | LIM1104P2AN44PU | LIM1TR4P2AN44PU | LIM1104P2AN46SU | LIM1TR4P2AN46SU |
| 0-1 PSI (0-0.1 BAR), UL | 2 psi | LIM1101P2GN44PU | LIM1TR1P2GN44PU | LIM1101P2GN46SU | LIM1TR1P2GN46SU |
| 0-5 PSI (0-0.35 BAR), UL | 10 psi | LIM1102P2GN44PU | LIM1TR2P2GN44PU | LIM1102P2GN46SU | LIM1TR2P2GN46SU |
| 0-7 PSI (0-0.5 BAR), UL | 14 psi | LIM1103P2GN44PU | LIM1TR3P2GN44PU | LIM1103P2GN46SU | LIM1TR3P2GN46SU |
| 0-15 PSI (0-1 BAR), UL | 30 psi | LIM1104P2GN44PU | LIM1TR4P2GN44PU | LIM1104P2GN46SU | LIM1TR4P2GN46SU |
| 0-25 PSI (0-1.6 BAR), UL | 50 psi | LIM1105P2GN44PU | LIM1TR5P2GN44PU | LIM1105P2GN46SU | LIM1TR5P2GN46SU |
| 0-30 PSI (0-2 BAR), UL | 60 psi | LIM1106P2GN44PU | LIM1TR6P2GN44PU | LIM1106P2GN46SU | LIM1TR6P2GN46SU |
| 0-36 PSI (0-2.5 BAR), UL | 72 psi | LIM1107P2GN44PU | LIM1TR7P2GN44PU | LIM1107P2GN46SU | LIM1TR7P2GN46SU |
| 0-50 PSI (0-3 BAR), UL | 100 psi | LIM1108P2GN44PU | LIM1TR8P2GN44PU | LIM1108P2GN46SU | LIM1TR8P2GN46SU |
| 0-60 PSI (0-4 BAR), UL | 120 psi | LIM1109P2GN44PU | LIM1TR9P2GN44PU | LIM1109P2GN46SU | LIM1TR9P2GN46SU |
| 0-87 PSI (0-6 BAR), UL | 174 psi | LIM1101S2GN44PU | LIM1TR1S2GN44PU | LIM1101S2GN46SU | LIM1TR1S2GN46SU |
| 0-100 PSI (0-7 BAR), UL | 200 psi | LIM1102S2GN44PU | LIM1TR2S2GN44PU | LIM1102S2GN46SU | LIM1TR2S2GN46SU |
| 0-150 PSI (0-10 BAR), UL | 300 psi | LIM1103S2GN44PU | LIM1TR3S2GN44PU | LIM1103S2GN46SU | LIM1TR3S2GN46SU |
| 0-200 PSI (0-15 BAR), UL | 400 psi | LIM1104S2GN44PU | LIM1TR4S2GN44PU | LIM1106S2GN46SU | LIM1TR4S2GN46SU |
| 0-230 PSI (0-16 BAR), UL | 460 psi | LIM1105S2GN44PU | LIM1TR5S2GN44PU | LIM1105S2GN46SU | LIM1TR5S2GN46SU |
| 0-300 PSI (0-20 BAR), UL | 600 psi | LIM1106S2GN44PU | LIM1TR6S2GN44PU | LIM1106S2GN46SU | LIM1TR6S2GN46SU |
| 0-360 PSI (0-25 BAR), UL | 720 psi | LIM1107S2GN44PU | LIM1TR7S2GN44PU | LIM1107S2GN46SU | LIM1TR7S2GN46SU |
| 0-500 PSI (0-35 BAR), UL | 1,000 psi | LIM1108S2GN44PU | LIM1TR8S2GN44PU | LIM1108S2GN46SU | LIM1TR8S2GN46SU |
| 0-580 PSI (0-40 BAR), UL | 1,160 psi | LIM1109S2GN44PU | LIM1TR9S2GN44PU | | |
| 0-725 PSI (0-50 BAR), UL | 1,450 psi | LIM1101T2GN44PU | LIM1TR1T2GN44PU | | |
| 0-870 PSI (0-60 BAR), UL | 1,740 psi | LIM1102T2GN44PU | LIM1TR2T2GN44PU | | |
| 0-1,000 PSI (0-70 BAR), UL | 2,000 psi | LIM1103T2GN44PU | LIM1TR3T2GN44PU | | |
| 0-1,500 PSI (0-100 BAR), UL | 3,000 psi | LIM1104T2GN44PU | LIM1TR4T2GN44PU | | |
| 0-2,000 PSI (0-150 BAR), UL | 4,000 psi | LIM1105T2GN44PU | LIM1TR5T2GN44PU | | |
| 0-2300 PSI (0-160 BAR), UL | 4,600 psi | LIM1106T2GN44PU | LIM1TR6T2GN44PU | | |
| 0-3,000 PSI (0-200 BAR), UL | 6,000 psi | LIM1107T2GN44PU | LIM1TR7T2GN44PU | | |
| 0-3,600 PSI (0-250 BAR), UL | 7,200 psi | LIM1108T2GN44PU | LIM1TR8T2GN44PU | | |
| 0-4000 PSI (0-300 BAR), UL | 8,000 psi | LIM1109T2GN44PU | LIM1TR9T2GN44PU | | |
| 0-5,000 PSI (0-350 BAR), UL | 10,000 psi | LIM1101U2GN44PU | LIM1TR1U2GN44PU | | |
| 0-6,000 PSI (0-400 BAR), UL | 12,000 psi | LIM1102U2GN44PU | LIM1TR2U2GN44PU | | |
| 0-7500 PSI (0-520 BAR), UL | 15,000 psi | LIM1103U2GN44PU | LIM1TR3U2GN44PU | | |
| 0-9000 PSI (0-600 BAR), UL | 18,000 psi | LIM1104U2GN44PU | LIM1TR4U2GN44PU | | |
| 0-10,000 PSI (0-700 BAR) | 20,000 psi | LIM1105U2GN44PU | LIM1TR5U2GN44PU | | |

# LIM Aggressive Media Transmitter

## Series Number (how to order)

| LIM Engineering Codes | | |

# LM1 Anti-Clogging Submersible Transmitter




## Description & Features:

- Heavy-duty submersible transmitter for level measurement in sludge and slurry installations
- 316L SS housing with anti-clogging sensor and reinforced diaphragm seal
- Standard ranges from 2 thru 50 psi, optional ranges from up to 140 psi
- ±0.25% accuracy
- 33' (10m) of vented cable standard, other lengths also available
- NEMA 6P / IP68 for full immersion
- 5 year warranty

## Applications:

- Manufactured for level measurement in sludge and slurry installations including lifting stations

| Specifications | |
|---|---|
| **Output Signal** | Standard 2-wire: 4-20 mA / Vs = 10-36 Vdc<br>Optional 3-wire: 0-5 V / Vs = 10-36 Vdc<br>3-wire: 0-10 V / Vs = 10-36 Vdc |
| **Accuracy** | Standard: ±0.25% FSO<br>Optional: ±0.5% FSO |
| **Response Time** | <10 ms |
| **Permissible Temperature** | Operating: -40°F to 185°F (-40°C to 85°C) |
| **Reverse Polarity Protection** | No damage. No function. |
| **Electromagnetic Compatibility** | EN50081-1/2 |
| **Housing** | 316L SS |
| **Pressure Port** | Flush mount |
| **Diaphragm** | 316L SS w/1Cr18Ni9Ti |
| **Electrical Connector** | 1/2" NPTM submersible conduit |
| **Lightning Protection** | Lifetime |
| **Enclosure Rating** | NEMA 6P/IP68 |

## Order Codes

| Range psi ("$H_2O$) | Over-pressure | Burst Pressure | Code |
|---|---|---|---|
| 0/2 psi (0/55) | 3 psi | 6 psi | LM1002 |
| 0/5 psi (0/138) | 7.5 psi | 15 psi | LM1005 |
| 0/10 psi (0/277) | 15 psi | 30 psi | LM1010 |
| 0/15 psi (0/415) | 22.5 psi | 45 psi | LM1015 |
| 0/25 psi (0/692) | 37.5 psi | 75 psi | LM1025 |
| 0/30 psi (0/830) | 45 psi | 90 psi | LM1030 |
| 0/50 psi (0/1,384) | 75 psi | 150 psi | LM1050 |

Other scales available on request.

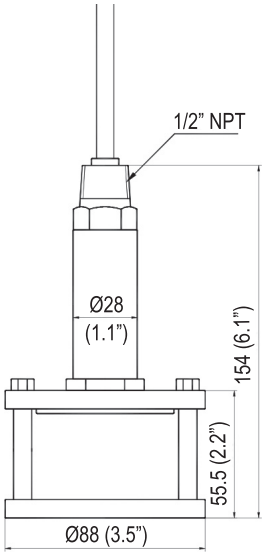


Note: Polyurethane cable standard, PTFE optional

| Pin Configuration | | |
|---|---|---|
| Electrical Connection | | Cable Colours |
| 2-wire system | Power V+<br>Signal Output<br>Shield | Red<br>Green/Blue<br>Yellow |
| 3-wire system | Power V+<br>Signal Output<br>Ground<br>Shield | Red<br>Green/Blue<br>Black<br>Yellow |

## Wiring Diagram

### Standard

2-wire-system (current)

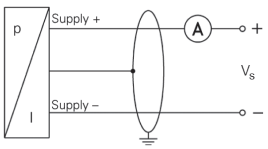


### Optional

3-wire-system (current / voltage)

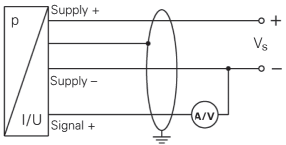

# LM6 All Stainless Steel Submersible Transmitter



## Description & Features:

- Designed for continuous level measurement in clean water, reservoirs and treatment plants
- Rugged stainless steel housing and highly accurate stainless steel sensor
- PUR vented cable in various lengths
- Available ranges from Inches of Water up to 300 psi
- ±0.35% accuracy standard, ±0.25% optional
- IP68 rated for full submersion and continous measurement
- CE mark and RoHS compliant
- 5 year warranty

## Applications:

- Appropriate for all level and depth measurement applications including open tanks, ground water, reservoirs and water treatment facilities

| Specifications | |
|---|---|
| **Output Signal** | 4…20 mA, 2-wire / Vs = 10-30 Vdc<br>5…4.5 Vdc, 3-wire / Vs = 10-30 Vdc<br>0...5 Vdc, 3-wire / Vs = 10-30 Vdc |
| **Accuracy** | ±0.35% Full Scale Output, ±0.25% FSO optional |
| **Load Resistance** | RL = (U-10)/0.02(Ω) (4~20mA current output), >20KΩ (voltage output) |
| **Long Term Stability** | 0.1% Full Scale per year |
| **Response Time** | 1 ms |
| **Storage Temperature** | -40 to 85 deg C (-40 to 185 deg F) |
| **Media Temperature** | 0 to 85 deg C (32 to 185 deg F) |
| **Insulation Resistance** | 100 MΩ @ 250 VDC |
| **Reverse Polarity Protection** | Yes |
| **Lightning Protection** | Yes |
| **Electromagnetic Protection** | IEC 61000 |
| **Enclosure Rating** | IP68 for full submersion and continuous measurement |
| **Housing** | 1Cr18Ni9Ti |
| **Wetted Parts** | 316L welded sensor |
| **Long Term Stability** | ±0.1% FSO (typically per year) |
| **Operation Life** | 1 million cycles, minimum |

## Wiring Diagram

2-wire-system (current)

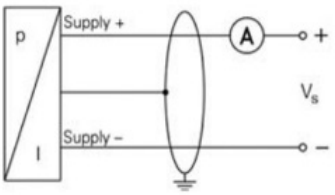


3-wire-system (current / voltage)

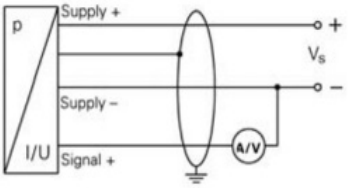


## Dimensions (mm)

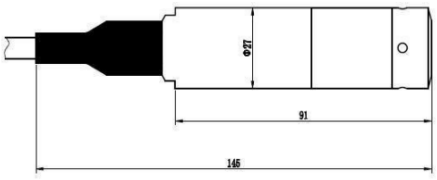


27mm = 1.1"

91mm = 3.6"

145mm = 5.7"

# LM6 All Stainless Steel Submersible Transmitter

## Order Codes

| Range (PSI) | Proof-Pressure (Inches of water or PSI) | 4/20mA, 0.35% Accuracy PUR vented cable | |
|---|---|---|---|
| | | 20ft | 40ft |
| 0-50 "H2O (0-1,270 MM H2O) | 75.0 | LM61PR1W3GS16SCL4 | LM61PR1W3GS16SCL6 |
| 0-100 "H2O (0-2,540 MM H2O) | 150.0 | LM61PR2W3GS16SCL4 | LM61PR2W3GS16SCL6 |
| 0-150 "H2O (0-3,810 MM H2O) | 225.0 | LM61PR3W3GS16SCL4 | LM61PR3W3GS16SCL6 |
| 0-200 "H2O (0-5,080 MM H2O) | 300.0 | LM61PR4W3GS16SCL4 | LM61PR4W3GS16SCL6 |
| 0-300 "H2O (0-7,620 MM H2O) | 450.0 | LM61PR5W3GS16SCL4 | LM61PR5W3GS16SCL6 |
| 0-400 "H2O (0-10,160 MM H2O) | 600.0 | LM61PR6W3GS16SCL4 | LM61PR6W3GS16SCL6 |
| 0-500 "H2O (0-12,700 MM H2O) | 750.0 | LM61PR7W3GS16SCL4 | LM61PR7W3GS16SCL6 |
| 0-5 PSI (0-0.35 BAR) | 7.5 | LM61PR2P3GS16SCL4 | LM61PR2P3GS16SCL6 |
| 0-10 PSI (0-0.7 BAR) | 15.0 | LM61PR5L3GS16SCL4 | LM61PR5L3GS16SCL6 |
| 0-15 PSI (0-1 BAR) | 22.5 | LM61PR4P3GS16SCL4 | LM61PR4P3GS16SCL6 |
| 0-25 PSI (0-1.7 BAR) | 37.5 | LM61PR4L3GS16SCL4 | LM61PR4L3GS16SCL6 |
| 0-50 PSI (0-3.4 BAR) | 75.0 | LM61PR3L3GS16SCL4 | LM61PR3L3GS16SCL6 |
| 0-100 PSI (0-7 BAR) | 150.0 | LM61PR2S3GS16SCL4 | LM61PR2S3GS16SCL6 |
| 0-150 PSI (0-10 BAR) | 225.0 | LM61PR3S3GS16SCL4 | LM61PR3S3GS16SCL6 |
| 0-200 PSI (0-15 BAR) | 300.0 | LM61PR4S3GS16SCL4 | LM61PR4S3GS16SCL6 |
| 0-230 PSI (0-16 BAR) | 345.0 | LM61PR5S3GS16SCL4 | LM61PR5S3GS16SCL6 |
| 0-300 PSI (0-20 BAR) | 450.0 | LM61PR6S3GS16SCL4 | LM61PR6S3GS16SCL6 |

## Series Number (how to order)

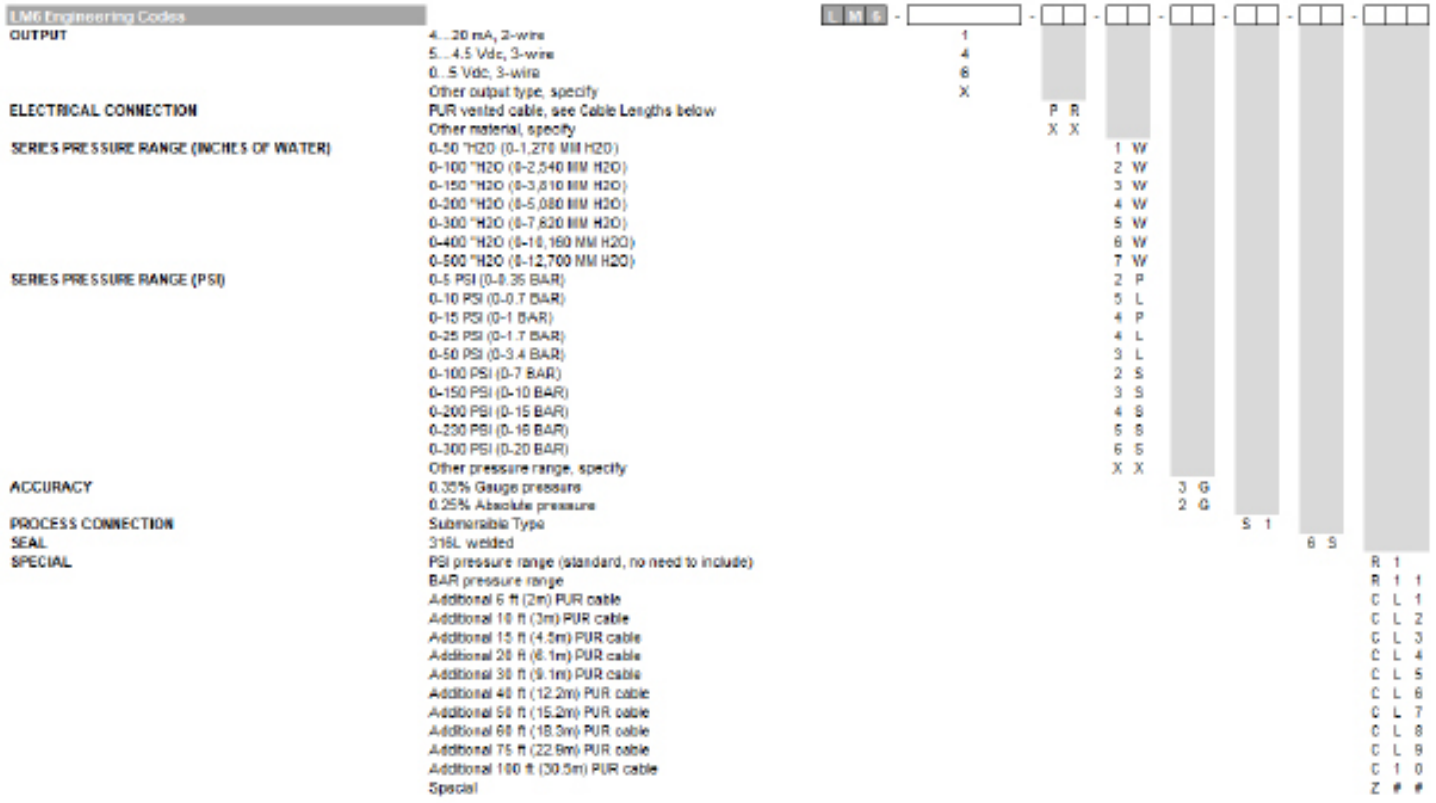

# LM7 General Purpose Submersible Transmitter



## Description & Features:

- Designed for continuous level measurement in clean water, reservoirs and treatment plants
- Rugged stainless steel housing and highly accurate ceramic sensor
- PUR vented cable in various lengths
- Available ranges from Low Pressure up to 300 psi
- ±0.5% accuracy standard, ±0.25% optional
- IP68 rated for full submersion and continous measurement
- CE mark and RoHS compliant
- 5 year warranty

## Applications:

- Appropriate for all level and depth measurement applications including open tanks, ground water, reservoirs and water treatment facilities

| Specifications | |
|---|---|
| **Output Signal** | 4…20 mA, 2-wire / Vs = 10-30 Vdc<br>5…4.5 Vdc, 3-wire / Vs = 10-30 Vdc<br>0...5 Vdc, 3-wire / Vs = 10-30 Vdc |
| **Accuracy** | ±0.5% Full Scale Output, ±0.25% FSO optional |
| **Load Resistance** | RL = (U-10)/0.02(Ω) (4~20mA current output), >20KΩ (voltage output) |
| **Long Term Stability** | 0.1% Full Scale per year |
| **Response Time** | 1 ms |
| **Storage Temperature** | -40 to 85 deg C (-40 to 185 deg F) |
| **Media Temperature** | 0 to 85 deg C (32 to 185 deg F) |
| **Insulation Resistance** | 100 MΩ @ 250 VDC |
| **Reverse Polarity Protection** | Yes |
| **Lightning Protection** | Yes |
| **Electromagnetic Protection** | IEC 61000 |
| **Enclosure Protection** | IP68 for full submersion and continuous measurement |
| **Housing** | 1Cr18Ni9Ti |
| **Wetted Parts** | Ceramic sensor with Viton O-ring |
| **Long Term Stability** | ±0.1% FSO (typically per year) |
| **Operation Life** | 1 million cycles, minimum |

## Wiring Diagram

2-wire-system (current)

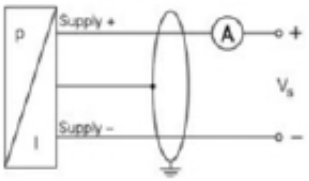


3-wire-system (current / voltage)

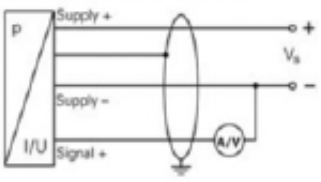


## Dimensions (mm)

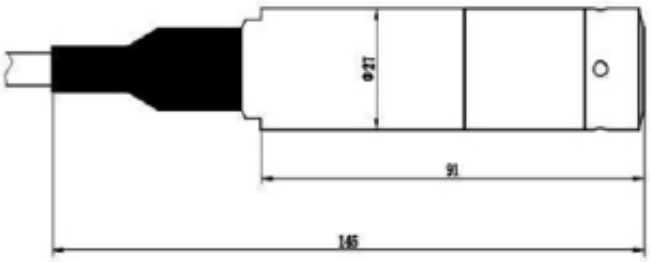


27mm = 1.1"

91mm = 3.6"

145mm = 5.7"

# LM7 General Purpose Submersible Transmitter

## Order Codes

| Range (PSI) | Proof-Pressure | 4/20mA, 0.5% Accuracy PUR vented cable | |
|---|---|---|---|
| | | 20ft | 40ft |
| 0-8 PSI (0-0.6 BAR) | 12.0 | LM71PR7L5GS1CVCL4 | LM71PR7L5GS1CVCL6 |
| 0-15 PSI (0-1 BAR) | 22.5 | LM71PR4P5GS1CVCL4 | LM71PR4P5GS1CVCL6 |
| 0-20 PSI (0-1.4 BAR) | 30.0 | LM71PR8L5GS1CVCL4 | LM71PR8L5GS1CVCL6 |
| 0-35 PSI (0-2.4 BAR) | 52.5 | LM71PR9L5GS1CVCL4 | LM71PR9L5GS1CVCL6 |
| 0-60 PSI (0-4 BAR) | 90.0 | LM71PR9P5GS1CVCL4 | LM71PR9P5GS1CVCL6 |
| 0-100 PSI (0-7 BAR) | 150.0 | LM71PR2S5GS1CVCL4 | LM71PR2S5GS1CVCL6 |
| 0-150 PSI (0-10 BAR) | 225.0 | LM71PR3S5GS1CVCL4 | LM71PR3S5GS1CVCL6 |
| 0-200 PSI (0-15 BAR) | 300.0 | LM71PR4S5GS1CVCL4 | LM71PR4S5GS1CVCL6 |
| 0-230 PSI (0-16 BAR) | 345.0 | LM71PR5S5GS1CVCL4 | LM71PR5S5GS1CVCL6 |
| 0-300 PSI (0-20 BAR) | 450.0 | LM71PR6S5GS1CVCL4 | LM71PR6S5GS1CVCL6 |

## Series Number (how to order)

| LM7 Engineering Codes | | L M 7 · | · | · | · | · | · | · |
|---|---|---|---|---|---|---|---|---|
| **OUTPUT** | 4..20 mA, 2-wire | 1 | | | | | | |
| | 5..4.5 Vdc, 3-wire | 4 | | | | | | |
| | 0..5 Vdc, 3-wire | 5 | | | | | | |
| | Other output type, specify | X | | | | | | |
| **ELECTRICAL CONNECTION** | PUR vented cable, see Cable Lengths below | | P R | | | | | |
| | Other material, specify | | X X | | | | | |
| **SERIES PRESSURE RANGE (PSI)** | 0-8 PSI (0-0.6 BAR) | | | 7 L | | | | |
| | 0-15 PSI (0-1 BAR) | | | 4 P | | | | |
| | 0-20 PSI (0-1.4 BAR) | | | 8 L | | | | |
| | 0-35 PSI (0-2.4 BAR) | | | 9 L | | | | |
| | 0-60 PSI (0-4 BAR) | | | 9 P | | | | |
| | 0-100 PSI (0-7 BAR) | | | 2 S | | | | |
| | 0-150 PSI (0-10 BAR) | | | 3 S | | | | |
| | 0-200 PSI (0-15 BAR) | | | 4 S | | | | |
| | 0-230 PSI (0-16 BAR) | | | 5 S | | | | |
| | 0-300 PSI (0-20 BAR) | | | 6 S | | | | |
| | Other pressure range, specify | | | X K | | | | |
| **ACCURACY** | 0.5% Gauge pressure | | | | 5 G | | | |
| | 0.25% Absolute pressure | | | | 2 G | | | |
| **PROCESS CONNECTION** | Submersible Type | | | | | S I | | |
| **SEAL** | Ceramic with Viton o-ring | | | | | | C V | |
| **SPECIAL** | PSI pressure range (standard, no need to include) | | | | | | | R 1 |
| | BAR pressure range | | | | | | | R 1 1 |
| | Additional 6 ft (2m) PUR cable | | | | | | | C L 1 |
| | Additional 10 ft (3m) PUR cable | | | | | | | C L 2 |
| | Additional 15 ft (4.6m) PUR cable | | | | | | | C L 3 |
| | Additional 20 ft (6.1m) PUR cable | | | | | | | C L 4 |
| | Additional 30 ft (9.1m) PUR cable | | | | | | | C L 5 |
| | Additional 40 ft (12.2m) PUR cable | | | | | | | C L 6 |
| | Additional 50 ft (15.2m) PUR cable | | | | | | | C L 7 |
| | Additional 60 ft (18.3m) PUR cable | | | | | | | C L 8 |
| | Additional 75 ft (22.9m) PUR cable | | | | | | | C L 9 |
| | Additional 100 ft (30.5m) PUR cable | | | | | | | C 1 0 |
| | Special | | | | | | | Z # # |

# LMH Hydraulic Transmitter



## Description & Features:

- Ideal for all applications with vibration and pulsation
- Compact, all stainless steel construction
- Available ranges from low pressure up to 15,000 psi (1,000 Bar)
- Wide range of mechanical and electrical connections
- ±0.5% accuracy
- Fully protected against dust and water, IP65 and IP67
- Built-in restrictor screw to safeguard electronics
- 5 year warranty

## Applications:

- Suitable for commercial, industrial and process installations where vibration is prevalent

| Specifications | |
|---|---|
| **Output Signal** | 4…20 mA, 2-wire / Vs = 12-30 Vdc<br>0…10 Vdc, 3-wire / Vs = 12-30 Vdc<br>0...5 Vdc, 3-wire / Vs = 12-30 Vdc |
| **Load Consumption** | Current Output: RL≤ (Us-12)/20kΩ, Voltage Output: RL>10 kΩ |
| **Repsonse Time** | 1 ms (10%...90%) |
| **Accuracy** | ±0.5% Full Scale Output |
| **Long-Term Stability** | ±0.02% FSO |
| **Wetted Parts** | All stainless steel with 17-4 PH welded sensor |
| **Process Connection** | NPT and G connections |
| **Shock** | 100 g's 11 ms |
| **Vibration** | 20 g's 20 to 5,000 Hz |
| **Storage Temperature** | -40 to 125 deg C (-40 to 257 deg F) |
| **Media Temperature** | -40 to 125 deg C (-40 to 257 deg F) |
| **Reverse Polarity Protection** | Yes |
| **Electrical Connections** | DIN 43650, M12, Packard, Cable Outlet and others on request |
| **Enclosure Rating** | DIN 43650 IP65, M12 & Cable Outlet IP67 |
| **Operation Life** | 10 million cycles |
| **Proof and Burst Pressure Ratings** | Maximum Working Pressure @ 2X, Burst Pressure @ 5X Full Scale |

# LMH Hydraulic Transmitter

## Dimension (Unit:mm)

DIN43650

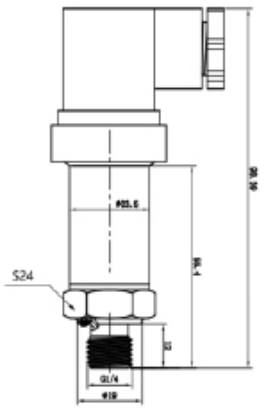


M12*1(4 pin)

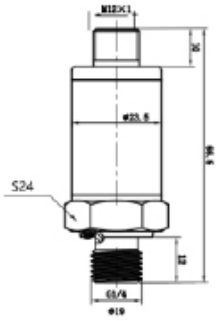


Compact Type（Only 0.5-4.5V Output)

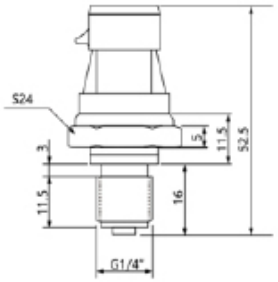


## Electrical Connection



DIN 43650

| Terminal | 2-wire | 3-wire |
|---|---|---|
| 1 | Power "+" | Power "+" |
| 2 | Signal | Signal |
| 3 | | Power "-" |

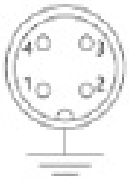

M12*1

| Terminal | 2-wire | 3-wire |
|---|---|---|
| 1 | Power "+" | Power "+" |
| 2 | Signal | Signal |
| 3 | | |
| 4 | | Power "-" |

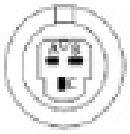

Packard

| Terminal | 3-wire |
|---|---|
| A | Power "-" |
| B | Power "+" |
| C | Signal |

## Process Connection (mm)



1/4" NPT

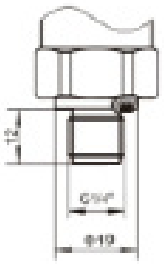

G1/4" DIN3852

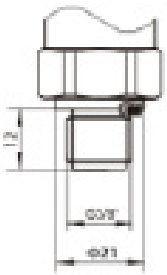

G3/8" DIN3852

# LMH Hydraulic Transmitter

## Order Codes

| Range | Proof Pressure (psi) | 4/20 mA 17-4 OG SS, 1/4" NPT Process, 0.5% Acc | |
|---|---|---|---|
| | | DIN 43650 A | Cable Outlet (1M/3') |
| 0-150 PSI (0-10 BAR), UL listed | 300 | LMH1103S5GN47P | LMH1TR3S5GN47P |
| 0-200 PSI (0-15 BAR), UL listed | 400 | LMH1104S5GN47P | LMH1TR4S5GN47P |
| 0-230 PSI (0-16 BAR), UL listed | 460 | LMH1105S5GN47P | LMH1TR5S5GN47P |
| 0-300 PSI (0-20 BAR), UL listed | 600 | LMH1106S5GN47P | LMH1TR6S5GN47P |
| 0-360 PSI (0-25 BAR), UL listed | 720 | LMH1107S5GN47P | LMH1TR7S5GN47P |
| 0-500 PSI (0-35 BAR), UL listed | 1,000 | LMH1108S5GN47P | LMH1TR8S5GN47P |
| 0-580 PSI (0-40 BAR), UL listed | 1,160 | LMH1109S5GN47P | LMH1TR9S5GN47P |
| 0-725 PSI (0-50 BAR), UL listed | 1,450 | LMH1101T5GN47P | LMH1TR1T5GN47P |
| 0-870 PSI (0-60 BAR), UL listed | 1,740 | LMH1102T5GN47P | LMH1TR2T5GN47P |
| 0-1,000 PSI (0-70 BAR), UL listed | 2,000 | LMH1103T5GN47P | LMH1TR3T5GN47P |
| 0-1,500 PSI (0-100 BAR), UL listed | 3,000 | LMH1104T5GN47P | LMH1TR4T5GN47P |
| 0-2,000 PSI (0-150 BAR), UL listed | 4,000 | LMH1105T5GN47P | LMH1TR5T5GN47P |
| 0-2300 PSI (0-160 BAR), UL listed | 4,600 | LMH1106T5GN47P | LMH1TR6T5GN47P |
| 0-3,000 PSI (0-200 BAR), UL listed | 6,000 | LMH1107T5GN47P | LMH1TR7T5GN47P |
| 0-3600 PSI (0-250 BAR) | 7,200 | LMH1108T5GN47P | LMH1TR8T5GN47P |
| 0-4000 PSI (0-300 BAR) | 8,000 | LMH1109T5GN47P | LMH1TR9T5GN47P |
| 0-5,000 PSI (0-350 BAR) | 10,000 | LMH1101U5GN47P | LMH1TR1U5GN47P |
| 0-6,000 PSI (0-400 BAR) | 12,000 | LMH1102U5GN47P | LMH1TR2U5GN47P |
| 0-7500 PSI (0-520 BAR) | 15,000 | LMH1103U5GN47P | LMH1TR3U5GN47P |
| 0-9000 PSI (0-600 BAR) | 18,000 | LMH1104U5GN47P | LMH1TR4U5GN47P |
| 0-10,000 PSI (0-700 BAR) | 20,000 | LMH1105U5GN47P | LMH1TR5U5GN47P |
| 0-15,000 PSI (0-1,000 BAR) | 30,000 | LMH1106U5GN47P | LMH1TR6U5GN47P |

## Series Number (how to order)

LMH - □ □ - □ □ - □ □ - □ □ - □ □ - □ □ □

| LMH Engineering Codes | | |
|---|---|---|
| **OUTPUT** | 4..20 mA, 2-wire | 1 |
| | 0..10 Vdc, 3-wire | 3 |
| | 0..5 Vdc, 3-wire | 5 |
| | 0.5...4.5 Vdc, 3-wire, ratiometric output | R |
| **ELECTRICAL CONNECTION** | Cable Outlet, PVC Shielded & jacketed #24 AWG (1 meter), IP67 | T R |
| | M12 circular male connector, IP67 | M 0 |
| | DIN 43650 Type A, IP65 | 1 0 |
| | Packard (compact), IP65 | M 1 |
| **SERIES PRESSURE RANGE (PSI)** | 0-150 PSI (0-10 BAR) | 3 S |
| | 0-200 PSI (0-15 BAR) | 4 S |
| | 0-230 PSI (0-16 BAR) | 5 S |
| | 0-300 PSI (0-20 BAR) | 6 S |
| | 0-360 PSI (0-25 BAR) | 7 S |
| | 0-500 PSI (0-35 BAR) | 8 S |
| | 0-580 PSI (0-40 BAR) | 9 S |
| | 0-725 PSI (0-50 BAR) | 1 T |
| | 0-870 PSI (0-60 BAR) | 2 T |
| | 0-1,000 PSI (0-70 BAR) | 3 T |
| | 0-1,500 PSI (0-100 BAR) | 4 T |
| | 0-2,000 PSI (0-150 BAR) | 5 T |
| | 0-2300 PSI (0-160 BAR) | 6 T |
| | 0-3,000 PSI (0-200 BAR) | 7 T |
| | 0-3600 PSI (0-250 BAR) | 8 T |
| | 0-4000 PSI (0-300 BAR) | 9 T |
| | 0-5,000 PSI (0-350 BAR) | 1 U |
| | 0-6,000 PSI (0-400 BAR) | 2 U |
| | 0-7500 PSI (0-520 BAR) | 3 U |
| | 0-9000 PSI (0-600 BAR) | 4 U |
| | 0-10,000 PSI (0-700 BAR) | 5 U |
| | 0-15,000 PSI (0-1,000 BAR) | 6 U |
| **ACCURACY** | 0.5% Gauge pressure | 5 G |
| **PROCESS CONNECTION** | 1/4" NPT male | N 4 |
| | 1/2" NPT male | N 2 |
| | G 1/4" male | G 4 |
| | G 1/2" male | G 2 |
| **SEAL** | 17-4 PH Stainless Steel all welded | 7 P |
| | 316L Stainless Steel all welded | 7 S |
| **SPECIAL** | PSI pressure range (standard seals, do not need to include in p/n) | R 1 |
| | BAR pressure range | R 1 1 |
| | Additional 6 ft (2m) PVC cable | C L 1 |
| | Additional 10 ft (3m) PVC cable | C L 2 |
| | Additional 15 ft (4.5m) PVC cable | C L 3 |
| | Special | Z # # |

# LST Sanitary Pressure Transmitter



## Description & Features:

- Sanitary tri-clamp with all stainless steel construction and designed eliminate debris build-up in the diaphragm
- Compact yet rugged stainless steel housing with highly accurate stainless steel sensor
- Available ranges from vacuum to 5,000 PSI (350 BAR)
- DIN-style electrical connection, cable outlet & M12 also available
- ±0.5% accuracy standard, ±0.25% accuracy optional
- CE mark and RoHS compliant
- Electromagnetic protection
- 5 year warranty

## Applications:

- With a hygienic tri-clamp connection, the LST is designed for all sanitary applications including food & beverage, dairy, pharmaceutical and bio-technology

| Specifications | |
|---|---|
| **Output Signal** | 4…20 mA, 2-wire / Vs = 10-30 Vdc<br>0…10 Vdc, 3-wire / Vs = 10-30 Vdc<br>0…5 Vdc, 3-wire / Vs = 10-30 Vdc<br>1...5 Vdc, 3-wire / Vs = 10-30 Vdc |
| **Accuracy** | ±0.5% Full Scale Output, ±0.25% FSO optional |
| **Overload/Burst Pressure** | <1,500 PSI @ 200%, <5,000 PSI @ 300% |
| **Load Resistance** | RL = (U-10)/0.02(Ω) (4~20mA current output), >20KΩ (voltage output) |
| **Long Term Stability** | ±0.25% FSO (typically per year) |
| **Response Time** | 1 ms |
| **Storage Temperature** | -10 to 70 deg C (14 to 158 deg F) |
| **Operating Temperature** | -40 to 85 deg C (-40 to 185 deg F) |
| **Insulation Resistance** | >100 MΩ @ 50 VDC |
| **Reverse Polarity Protection** | Yes |
| **Electromagnetic Protection** | Yes |
| **Enclosure Rating** | IP65 for DIN 43650-A, IP66 for Cable Outlet / M12 |
| **Housing** | 1Cr18Ni9Ti |
| **Wetted Parts** | 316L welded sensor |
| **Process Connections** | Tri-clamp 1.5” (50.5mm), 2.0” (64mm) and 2.5” (78mm) |
| **Operation LIfe** | 1 million cycles, minimum |
| **Weight** | 185 grams (0.4 pounds) |

Tri-Clamp® is a registered trademark of Tri-Clover, Inc.

# LST Sanitary Pressure Transmitter

## Wiring Diagram

2-wire-system (current)

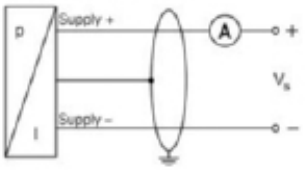


3-wire-system (current / voltage)

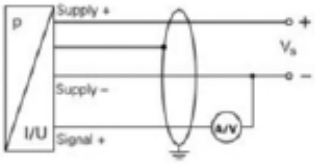


## Dimensions (mm)

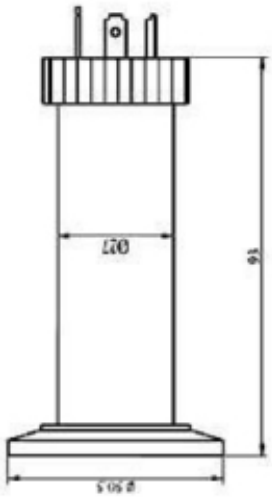


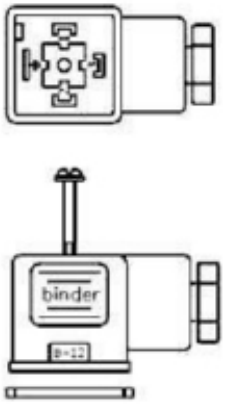


27mm = 1.1"

91mm = 3.6"

## Order Codes

| Range (PSI) | Proof-Pressure | 4/20mA, 0.5% Accuracy 2" Tri-Clamp connetion | |
|---|---|---|---|
| | | DIN 43650 Electrical connection | Cable Outlet, 1m |
| -14.5-0 PSI (-1-0 BAR) | 15.0 | LST1101V5GT26S | LST1TR1V5GT26S |
| 0-15 PSI (0-1 BAR) | 30.0 | LST1104P5GT26S | LST1TR4P5GT26S |
| 0-30 PSI (0-2 BAR) | 60.0 | LST1106P5GT26S | LST1TR6P5GT26S |
| 0-60 PSI (0-4 BAR) | 120.0 | LST1109P5GT26S | LST1TR9P5GT26S |
| 0-100 PSI (0-6.9 BAR) | 200.0 | LST1102S5GT26S | LST1TR2S5GT26S |
| 0-160 PSI (0-11 BAR) | 320.0 | LST1103S5GT26S | LST1TR3S5GT26S |
| 0-200 PSI (0-13.8 BAR) | 400.0 | LST1104S5GT26S | LST1TR4S5GT26S |
| 0-300 PSI (0-20.7 BAR) | 600.0 | LST1106S5GT26S | LST1TR6S5GT26S |
| 0-500 PSI (0-34.5 BAR) | 1000.0 | LST1108S5GT26S | LST1TR8S5GT26S |
| 0-725 PSI (0-50 BAR) | 1450.0 | LST1101T5GT26S | LST1TR1T5GT26S |
| 0-1,000 PSI (0-70 BAR) | 2000.0 | LST1103T5GT26S | LST1TR3T5GT26S |
| 0-1,500 PSI (0-100 BAR) | 3000.0 | LST1104T5GT26S | LST1TR4T5GT26S |
| 0-2,000 PSI (0-150 BAR) | 6000.0 | LST1105T5GT26S | LST1TR5T5GT26S |
| 0-3,000 PSI (0-200 BAR) | 9000.0 | LST1107T5GT26S | LST1TR7T5GT26S |
| 0-4,000 PSI (0-300 BAR) | 12000.0 | LST1109T5GT26S | LST1TR9T5GT26S |
| 0-5,000 PSI (0-350 BAR) | 15000.0 | LST1101U5GT26S | LST1TR1U5GT26S |

## Series Number (how to order)

| LST Engineering Codes | | L S T - | | - | | - | | - | | - | | - | |
|---|---|---|---|---|---|---|---|---|---|---|---|---|---|
| **OUTPUT** | 4..20 mA, 2-wire | | 1 | | | | | | | | | | |
| | 0..10 Vdc, 3-wire | | 3 | | | | | | | | | | |
| | 1..5 Vdc, 3-wire | | 5 | | | | | | | | | | |
| | 0..5 Vdc, 3-wire | | 6 | | | | | | | | | | |
| | Other output type, specify | | X | | | | | | | | | | |
| **ELECTRICAL CONNECTION** | DIN 43650 Type-A, IP65 | | | | 1 0 | | | | | | | | |
| | Cable Outlet, PVC Shielded, 1 meter, IP65 | | | | T R | | | | | | | | |
| | M12, IP68 | | | | M 0 | | | | | | | | |
| | Other material, specify | | | | X K | | | | | | | | |
| **SERIES PRESSURE RANGE (PSI)** | -14.5-0 PSI (-1-0 BAR) | | | | | 1 V | | | | | | | |
| | 0-15 PSI (0-1 BAR) | | | | | 4 P | | | | | | | |
| | 0-30 PSI (0-2 BAR) | | | | | 6 P | | | | | | | |
| | 0-60 PSI (0-4 BAR) | | | | | 9 P | | | | | | | |
| | 0-100 PSI (0-6.9 BAR) | | | | | 2 S | | | | | | | |
| | 0-160 PSI (0-11 BAR) | | | | | 3 S | | | | | | | |
| | 0-200 PSI (0-13.8 BAR) | | | | | 4 S | | | | | | | |
| | 0-300 PSI (0-20.7 BAR) | | | | | 6 S | | | | | | | |
| | 0-500 PSI (0-34.5 BAR) | | | | | 8 S | | | | | | | |
| | 0-725 PSI (0-50 BAR) | | | | | 1 T | | | | | | | |
| | 0-1,000 PSI (0-70 BAR) | | | | | 3 T | | | | | | | |
| | 0-1,500 PSI (0-100 BAR) | | | | | 4 T | | | | | | | |
| | 0-2,000 PSI (0-150 BAR) | | | | | 5 T | | | | | | | |
| | 0-3,000 PSI (0-200 BAR) | | | | | 7 T | | | | | | | |
| | 0-4,000 PSI (0-300 BAR) | | | | | 9 T | | | | | | | |
| | 0-5,000 PSI (0-350 BAR) | | | | | 1 U | | | | | | | |
| | 0-6,000 PSI (0-400 BAR) | | | | | 2 U | | | | | | | |
| | 0-7,500 PSI (0-520 BAR) | | | | | 3 U | | | | | | | |
| | 0-9,000 PSI (0-600 BAR) | | | | | 4 U | | | | | | | |
| | 0-10,000 PSI (0-700 BAR) | | | | | 5 U | | | | | | | |
| | Other pressure range, specify | | | | | # # | | | | | | | |
| **ACCURACY** | 0.5% Gauge pressure | | | | | | 5 G | | | | | | |
| | 0.25% Gauge pressure | | | | | | 2 G | | | | | | |
| **PROCESS CONNECTION** | 1.5" (50.5mm) Tri-Clamp | | | | | | | T 4 | | | | | |
| | 2.0" (64mm) Tri-Clamp | | | | | | | T 2 | | | | | |
| | 2.5" (78mm) Tri-Clamp | | | | | | | T 3 | | | | | |
| | Other process connection, specify | | | | | | | # # | | | | | |
| **SEAL** | 316L welded | | | | | | | | | | 6 5 | | |
| **SPECIAL** | PSI pressure range (standard, no need to include) | | | | | | | | | | | R 1 | |
| | BAR pressure range | | | | | | | | | | | R 1 1 | |
| | Additional 6 ft (2m) PVC cable | | | | | | | | | | | C L 1 | |
| | Additional 10 ft (3m) PVC cable | | | | | | | | | | | C L 2 | |
| | Special | | | | | | | | | | | Z # # | |

Tri-Clamp® is a registered trademark of Tri-Clover, Inc.

# LTF Flush Mount Transmitter



## Description & Features:

- Flush mounted stainless steel diaphragm to eliminate any debris build-up in the pressure cavity
- Compact yet rugged stainless steel housing with highly accurate stainless steel sensor
- Available ranges from vacuum to 10,000 psi (700 BAR)
- DIN-style electrical connection, cable outlet & M12 also available
- ±0.5% accuracy standard, ±0.25% accuracy optional
- CE mark and RoHS compliant
- Electromagnetic protection
- 5 year warranty

## Applications:

- Ideally suited for the pressure measurement of viscous fluids or media which may clog a standard process connection

| Specifications | |
|---|---|
| **Output Signal** | 4…20 mA, 2-wire / Vs = 10-30 Vdc<br>0…10 Vdc, 3-wire / Vs = 10-30 Vdc<br>0…5 Vdc, 3-wire / Vs = 10-30 Vdc<br>1...5 Vdc, 3-wire / Vs = 10-30 Vdc |
| **Accuracy** | ±0.5% Full Scale Output, ±0.25% FSO optional |
| **Overload/Burst Pressure** | <1,500 PSI @ 200%, <10,000 PSI @ 300% |
| **Load Resistance** | RL = (U-10)/0.02(Ω) (4~20mA current output), >20KΩ (voltage output) |
| **Long Term Stability** | ±0.25% FSO (typically per year) |
| **Response Time** | 1 ms |
| **Storage Temperature** | -10 to 70 deg C (14 to 158 deg F) |
| **Operating Temperature** | -40 to 85 deg C (-40 to 185 deg F) |
| **Insulation Resistance** | >100 MΩ @ 50 VDC |
| **Reverse Polarity Protection** | Yes |
| **Electromagnetic Protection** | Yes |
| **Enclosure Rating** | IP65 for DIN 43650-A, IP66 for Cable Outlet / M12 |
| **Housing** | 1Cr18Ni9Ti |
| **Wetted Parts** | 316L welded sensor |
| **Process Connections** | G1/4, G1/2, G3/4, G1 and M20*1.5 |
| **Operation LIfe** | 1 million cycles, minimum |
| **Weight** | 185 grams (0.4 pounds) |

# LTF Flush Mount Transmitter

## Order Codes

| Range (PSI) | Proof-Pressure (PSI) | 4/20mA, 0.5% Accuracy DIN Electrical Connection | |
|---|---|---|---|
| | | G1/4 M | G1/2 M |
| -14.5-0 PSI (-1-0 BAR) | 15.0 | LTF1101V5GG46S | LTF1101V5GG26S |
| 0-15 PSI (0-1 BAR) | 30.0 | LTF1104P5GG46S | LTF1104P5GG26S |
| 0-30 PSI (0-2 BAR) | 60.0 | LTF1106P5GG46S | LTF1106P5GG26S |
| 0-60 PSI (0-4 BAR) | 120.0 | LTF1109P5GG46S | LTF1109P5GG26S |
| 0-100 PSI (0-6.9 BAR) | 200.0 | LTF1102S5GG46S | LTF1102S5GG26S |
| 0-160 PSI (0-11 BAR) | 320.0 | LTF1103S5GG46S | LTF1103S5GG26S |
| 0-200 PSI (0-13.8 BAR) | 400.0 | LTF1104S5GG46S | LTF1104S5GG26S |
| 0-300 PSI (0-20.7 BAR) | 600.0 | LTF1106S5GG46S | LTF1106S5GG26S |
| 0-500 PSI (0-34.5 BAR) | 1000.0 | LTF1108S5GG46S | LTF1108S5GG26S |
| 0-725 PSI (0-50 BAR) | 1450.0 | LTF1101T5GG46S | LTF1101T5GG26S |
| 0-1,000 PSI (0-70 BAR) | 2000.0 | LTF1103T5GG46S | LTF1103T5GG26S |
| 0-1,500 PSI (0-100 BAR) | 3000.0 | LTF1104T5GG46S | LTF1104T5GG26S |
| 0-2,000 PSI (0-150 BAR) | 6000.0 | LTF1105T5GG46S | LTF1105T5GG26S |
| 0-3,000 PSI (0-200 BAR) | 9000.0 | LTF1107T5GG46S | LTF1107T5GG26S |
| 0-4,000 PSI (0-300 BAR) | 12000.0 | LTF1109T5GG46S | LTF1109T5GG26S |
| 0-5,000 PSI (0-350 BAR) | 15000.0 | LTF1101U5GG46S | LTF1101U5GG26S |
| 0-6,000 PSI (0-400 BAR) | 18000.0 | LTF1102U5GG46S | LTF1102U5GG26S |
| 0-7,500 PSI (0-520 BAR) | 22500.0 | LTF1103U5GG46S | LTF1103U5GG26S |
| 0-9,000 PSI (0-600 BAR) | 27000.0 | LTF1104U5GG46S | LTF1104U5GG26S |
| 0-10,000 PSI (0-700 BAR) | 30000.0 | LTF1105U5GG46S | LTF1105U5GG26S |

## Wiring Diagram

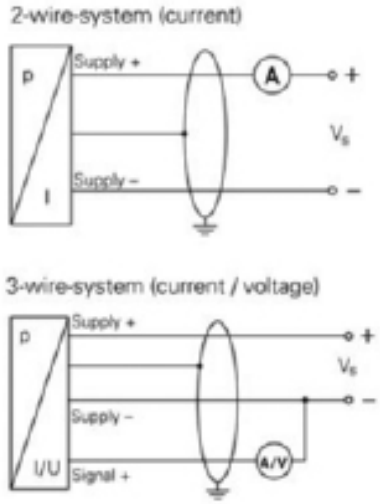


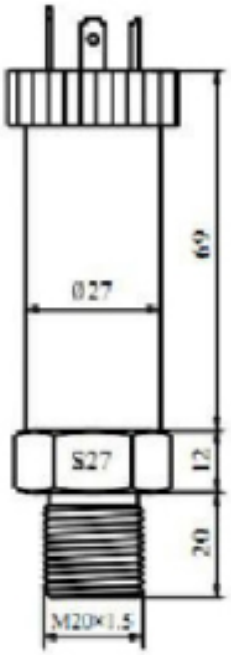


## Dimensions (mm)

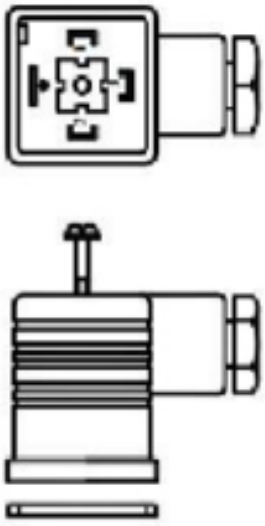

12mm = 0.5"

20mm = 0.8"

27mm = 1.1"

69mm = 2.7"

## Series Number (how to order)

| LTF Engineering Codes | | L T F - | | - | | - | | - | | - | | - |
|---|---|---|---|---|---|---|---|---|---|---|---|---|
| **OUTPUT** | 4..20 mA, 2-wire | | 1 | | | | | | | | | |
| | 0..10 Vdc, 3-wire | | 3 | | | | | | | | | |
| | 1..5 Vdc, 3-wire | | 5 | | | | | | | | | |
| | 0..5 Vdc, 3-wire | | 6 | | | | | | | | | |
| | Other output type, specify | | X | | | | | | | | | |
| **ELECTRICAL CONNECTION** | DIN 43650 Type-A, IP65 | | | | 1 0 | | | | | | | |
| | Cable Outlet, PVC Shielded, 1 meter, IP68 | | | | T R | | | | | | | |
| | M12, IP66 | | | | M 0 | | | | | | | |
| | Other material, specify | | | | K X | | | | | | | |
| **SERIES PRESSURE RANGE (PSI)** | -14.5-0 PSI (-1-0 BAR) | | | | | 1 V | | | | | | |
| | 0-15 PSI (0-1 BAR) | | | | | 4 P | | | | | | |
| | 0-30 PSI (0-2 BAR) | | | | | 6 P | | | | | | |
| | 0-60 PSI (0-4 BAR) | | | | | 9 P | | | | | | |
| | 0-100 PSI (0-6.9 BAR) | | | | | 2 S | | | | | | |
| | 0-160 PSI (0-11 BAR) | | | | | 3 S | | | | | | |
| | 0-200 PSI (0-13.8 BAR) | | | | | 4 S | | | | | | |
| | 0-300 PSI (0-20.7 BAR) | | | | | 6 S | | | | | | |
| | 0-500 PSI (0-34.5 BAR) | | | | | 8 S | | | | | | |
| | 0-725 PSI (0-50 BAR) | | | | | 1 T | | | | | | |
| | 0-1,000 PSI (0-70 BAR) | | | | | 3 T | | | | | | |
| | 0-1,500 PSI (0-100 BAR) | | | | | 4 T | | | | | | |
| | 0-2,000 PSI (0-150 BAR) | | | | | 5 T | | | | | | |
| | 0-3,000 PSI (0-200 BAR) | | | | | 7 T | | | | | | |
| | 0-4,000 PSI (0-300 BAR) | | | | | 9 T | | | | | | |
| | 0-5,000 PSI (0-350 BAR) | | | | | 1 U | | | | | | |
| | 0-6,000 PSI (0-400 BAR) | | | | | 2 U | | | | | | |
| | 0-7,500 PSI (0-520 BAR) | | | | | 3 U | | | | | | |
| | 0-9,000 PSI (0-600 BAR) | | | | | 4 U | | | | | | |
| | 0-10,000 PSI (0-700 BAR) | | | | | 5 U | | | | | | |
| | Other pressure range, specify | | | | | # # | | | | | | |
| **ACCURACY** | 0.5% Gauge pressure | | | | | | 5 G | | | | | |
| | 0.25% Gauge pressure | | | | | | 2 G | | | | | |
| **PROCESS CONNECTION** | G1/4 Male | | | | | | | G 4 | | | | |
| | G1/2 Male | | | | | | | G 2 | | | | |
| | G3/4 Male | | | | | | | G 3 | | | | |
| | G1 Male | | | | | | | G 1 | | | | |
| | M20 * 1.5 | | | | | | | M 2 | | | | |
| **SEAL** | 316L welded | | | | | | | | | 6 S | | |
| **SPECIAL** | PSI pressure range (standard, no need to include) | | | | | | | | | | R I | |
| | BAR pressure range | | | | | | | | | | R I 1 | |
| | Additional 6 ft (2m) PVC cable | | | | | | | | | | C L 1 | |
| | Additional 10 ft (3m) PVC cable | | | | | | | | | | C L 2 | |
| | Special | | | | | | | | | | 2 # # | |

# LXP Explosion Proof Transmitter



## Description & Features:

- Microprocessor-based high performing transmitter
- Explosion proof smart pressure transmitter for hazardous locations
- Rugged stainless steel construction with silicone sensing technology
- 0.1%, 0.2% or 0.5% accuracy
- Digital HART or Modbus communications available
- cCSAus approved for hazardous locations (up to 10,000 psi)
- 5 NACE compliant for sour gas applications
- Single seal ANSI compliance pending
- CRN registered
- 5 year warranty

## Applications:

- Suitable for a variety of hazardous and smart pressure transmitter-installations including petrochemical plants, pipelines, fuel transfer systems and power plants
- Any hazardous location requiring high performance pressure monitoring

| Specifications | |
|---|---|
| **Output Signal** | 4/20 mA, 2-wire / V = 10-30 VDC<br>4/20 mA + HART, 2-wire / V = 16.5-55 VDC<br>Modbus-RTU / RS485, 4-wire / V = 9-30 VDC<br>0.5/4.5 VDC, 3-wire / V = 6-30 VDC<br>0.5/4.5 VDC, 3-wire ratiometric output / V = 5 VDC |
| **Accuracy** | 0.2% URL standard, 0.1% and 0.5% optional |
| **Stability** | 0.1% URL per year |
| **Temperature Ranges** | Working temperature: -40/85 deg C, -40/185 deg F<br>Storage temperature: -40/110 deg C, -40/230 deg F<br>Media temperature: Silicone oil -30/80 deg C (-22/176 deg F) |
| **Working Humidity** | 0-95 % |
| **Pressure Connection** | 1/4” or 1/2” NPT M, 1/4” or 1/2 “ GM or M 20 |
| **Housing** | All stainless steel construction including welded seal |
| **Wetted Parts** | 316L, NACE compliant stainless steel |
| **Overload Pressure** | 1.5 x rated pressure |
| **Power Consumption** | </- 500 mW (20.8 mA output @ 24 VDC) |
| **Vibration** | 10 g, 25…2,000 Hz |
| **Shock** | 500 g, 1 ms |
| **Protection Class** | EMI, ESD, RFI protection - Surge immunity IEC61000-4-5<br>IP67 standard |
| **Approvals** | CSA for USA & Canada (up to 10,000 psi)<br>- Class I Division 1 Group A, B, C & D T6 / Class II Division 1 Group E, F & G T80 deg C / Class III<br>CRN Registered |
| **Weight** | 0.95 lbs (0.43 kg) |
| **Operational Life** | 10 million cycles |

# LXP Explosion Proof Transmitter

## Order Codes

| Process Connection | | 1/4" NPT | 1/2" NPT | 1/4" NPT | 1/2" NPT | 1/4" NPT | 1/2" NPT | 1/4" NPT | 1/2" NPT |
|---|---|---|---|---|---|---|---|---|---|
| Pressure Range | Overload Limit (psi) | 4/20 mA | | 4/20 mA + HART | | 0.5/4.5 VDC | | MODBUS RS485 | |
| -1/0/1 PSI | 1.52 | LXP011XN4 | LXP011XN2 | LXP01HXN4 | LXP01HXN2 | LXP013XN4 | LXP013XN2 | LXP01RXN4 | LXP01RXN2 |
| -3/0/3 PSI | 4.35 | LXP021XN4 | LXP021XN2 | LXP02HXN4 | LXP02HXN2 | LXP023XN4 | LXP023XN2 | LXP02RXN4 | LXP02RXN2 |
| -5/0/5 PSI | 7.61 | LXP031XN4 | LXP031XN2 | LXP03HXN4 | LXP03HXN2 | LXP033XN4 | LXP033XN2 | LXP03RXN4 | LXP03RXN2 |
| -14.5/0/14.5 PSI | 21.76 | LXP041XN4 | LXP041XN2 | LXP04HXN4 | LXP04HXN2 | LXP043XN4 | LXP043XN2 | LXP04RXN4 | LXP04RXN2 |
| -14.5/0/30 PSI | 43.50 | LXP051XN4 | LXP051XN2 | LXP05HXN4 | LXP05HXN2 | LXP053XN4 | LXP053XN2 | LXP05RXN4 | LXP05RXN2 |
| -14.5/0/100 PSI | 152.29 | LXP061XN4 | LXP061XN2 | LXP06HXN4 | LXP06HXN2 | LXP063XN4 | LXP063XN2 | LXP06RXN4 | LXP06RXN2 |
| -14.5/0/145 PSI | 217.60 | LXP071XN4 | LXP071XN2 | LXP07HXN4 | LXP07HXN2 | LXP073XN4 | LXP073XN2 | LXP07RXN4 | LXP07RXN2 |
| -14.5/0/250 PSI | 369.80 | LXP081XN4 | LXP081XN2 | LXP08HXN4 | LXP08HXN2 | LXP083XN4 | LXP083XN2 | LXP08RXN4 | LXP08RXN2 |
| -14.5/0/500 PSI | 761.40 | LXP091XN4 | LXP091XN2 | LXP09HXN4 | LXP09HXN2 | LXP093XN4 | LXP093XN2 | LXP09RXN4 | LXP09RXN2 |
| -14.5/0/1,000 PSI | 1,522.90 | LXP101XN4 | LXP101XN2 | LXP10HXN4 | LXP10HXN2 | LXP103XN4 | LXP103XN2 | LXP10RXN4 | LXP10RXN2 |
| -14.5/0/2,500 PSI | 3,698.50 | LXP111XN4 | LXP111XN2 | LXP11HXN4 | LXP11HXN2 | LXP113XN4 | LXP113XN2 | LXP11RXN4 | LXP11RXN2 |
| -14.5/0/5,000 PSI | 7,614.50 | LXP121XN4 | LXP121XN2 | LXP12HXN4 | LXP12HXN2 | LXP123XN4 | LXP123XN2 | LXP12RXN4 | LXP12RXN2 |
| -14.5/0/6,000 PSI | 8,702.30 | LXP131XN4 | LXP131XN2 | LXP13HXN4 | LXP13HXN2 | LXP133XN4 | LXP133XN2 | LXP13RXN4 | LXP13RXN2 |
| -14.5/0/8,700 PSI | 13,053.40 | LXP141XN4 | LXP141XN2 | LXP14HXN4 | LXP14HXN2 | LXP143XN4 | LXP143XN2 | LXP14RXN4 | LXP14RXN2 |
| -14.5/0/10,000 PSI | 15,229.00 | LXP151XN4 | LXP151XN2 | LXP15HXN4 | LXP15HXN2 | LXP153XN4 | LXP153XN2 | LXP15RXN4 | LXP15RXN2 |
| -14.5/0/14,500 PSI | 21,755.70 | LXP161XN4 | LXP161XN2 | LXP16HXN4 | LXP16HXN2 | LXP163XN4 | LXP163XN2 | LXP16RXN4 | LXP16RXN2 |

## Dimensions (mm)

### Explosion Proof Version

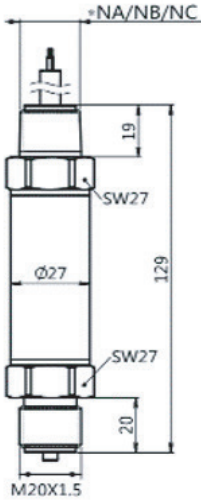


### Water Proof Version




### Process Connections

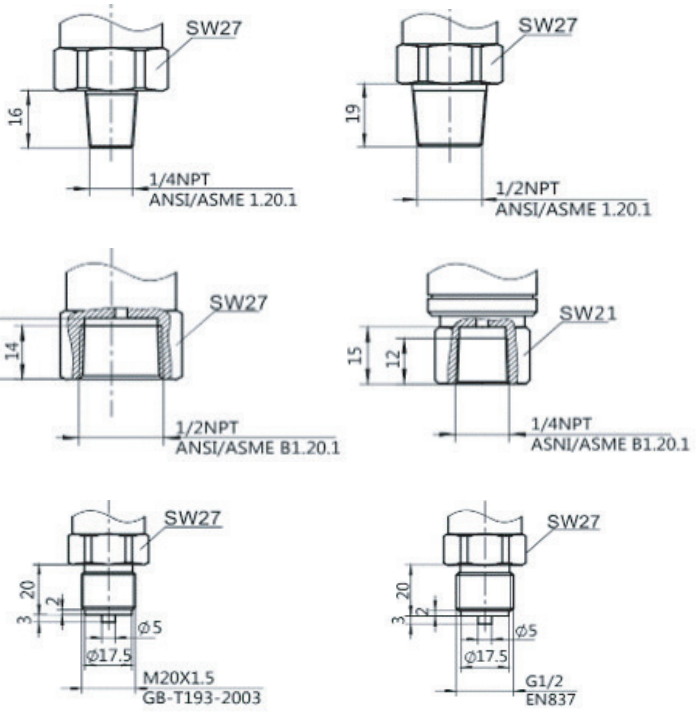


## Cable outlet

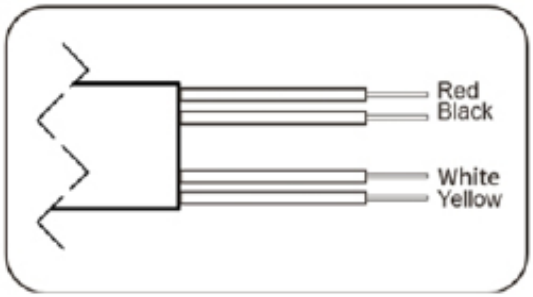


| Label | 4-20mA | 4-20mA +HART | 0.5-4.5 VDC | Modbus-RTU/RS485 |
|---|---|---|---|---|
| Red | Power+ | Power+ | Power+ | Power+ |
| Black | Power- | Power- | Power- | Power- |
| White | Key-Z | Key-Z | Key-Z | A+ |
| Yellow | - | - | Signal+ | B- |

## Pin Configurations

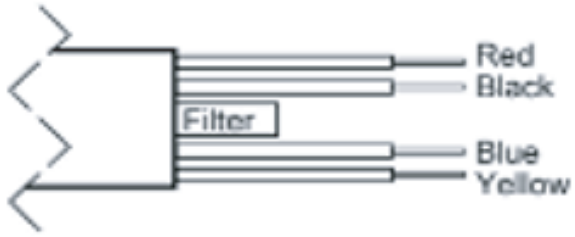


| Label | Two wires | Three wires | Four wires | Modbus-RTU/RS485 |
|---|---|---|---|---|
| Red | Power+ | Power+ | Power+ | Power+ |
| Black | Power- | Power- | Power- | Power- |
| Blue | | signal+ | Signal+ | A+ |
| Yellow | | | Signal- | B- |

| Label | Two Wires | Three Wires | Four Wires | Modbus - RTU/RS485 |
|---|---|---|---|---|
| Red | Power + | Power + | Power + | Power + |
| Black | Power - | Power - | Power - | Power - |
| Blue | | Signal + | Signal + | A + |
| Yellow | | | Signal - | B - |

## Series Number (how to order)

LXP - □ - □ - □□□ - □ - □ - □□ - □□ - □ - □ - □ - □□□

| LXP Engineering Codes | | |
|---|---|---|
| **OUTPUT** | 4…20 mA / 2-wire | 1 |
| | 4…20 mA / 2-wire + HART | H |
| | Modbus-RTU / RS485, 4-wire | R |
| | 0.5...4.5 V, 3-wire | 3 |
| | 0.5...4.5 V, 3-wire, ratiometric output | 4 |
| **SERIES PRESSURE RANGE (PSI)** | -1/0/1, smallest calibration span 0.7 | P01 |
| | -3/0/3, smallest calibration span 1.5 | P02 |
| | -5/0/5, smallest calibration span 3.0 | P03 |
| | -14.5/0/14.5, smallest calibration span 5.1 | P04 |
| | -14.5/0/30, smallest calibration span 14.5 | P05 |
| | -14.5/0/100, smallest calibration span 29.0 | P06 |
| | -14.5/0/145, smallest calibration span 72.5 | P07 |
| | -14.5/0/250, smallest calibration span 145 | P08 |
| | -14.5/0/500, smallest calibration span 247 | P09 |
| | -14.5/0/1,000, smallest calibration span 508 | P10 |
| | -14.5/0/2,500, smallest calibration span 1,015 | P11 |
| | -14.5/0/5,000, smallest calibration span 2,466 | P12 |
| | -14.5/0/6,000, smallest calibration span 2,901 | P13 |
| | -14.5/0/8,700, smallest calibration span 4,351 | P14 |
| | -14.5/0/10,000, smallest calibration span 5,076 | P15 |
| | -14.5/0/14,500, smallest calibration span 7,252 | P16 |
| | Custom Pressure Range (Numbers from P01 to P99) | PXX |
| **PRESSURE** | Gauge (standard) | G |
| | Absolute (Only available in 0-1,450 psi pressure ranges and 0.2% accuracy) | A |
| **ACCURACY** | 0.2% (standard) | 2 |
| | 0.10% | 1 |
| | 0.50% | 5 |
| **ELECTRICAL CONNECTION** | Flame proof G 1/2 M, cable diameter 7.5mm, IP67 | E1 |
| | Flame proof M20 x 1.5 M, cable diameter 7.5mm, IP67 | E2 |
| | Flame proof 1/2" NPT M, cable diameter 7.5mm, IP67 (standard) | E3 |
| | Water proof connector M16 x 1.5, coper braided zinc material, cable diameter 6-8mm, IP65 | E4 |
| | Stainless steel wate proof connector, cable diameter 7.5mnm, IP68 | E5 |
| **PROCESS CONNECTION** | 1/4" NPT M | N4 |
| | 1/2" NPT M | N2 |
| | 1/4" NPT F | F4 |
| | 1/2" NPT F | F2 |
| | G 1/4" M, EN837 | G4 |
| | G 1/2" M, EN837 | G2 |
| | G 1/4" M, ISO228 DIN16288 | D4 |
| | M20 * 1.5 M, ISO261 | M2 |
| | Custom Process Connection | XX |
| **SEALS** | Welded (standard) | W |
| **PRESSURE PORT** | 304 SS | 4 |
| | 316 SS (standard) | 6 |
| **DIAPHRAGM MATERIAL** | 316 SS (standard) | 6 |
| **SPECIAL** | Cable Length, metres (2m is standard length), PUR, per metre | UXX |
| | Cable Length, metres, PVC | VXX |
| | Custom Range (R1=psi, R2=kPa, R3=kg/cm2, R4=cmH2O, R5=ftH2O, R6=inHg, R7=mmHg, R8=inH2O, R9=ozIN2, R10=ATM, R11=bar, R12=mbar, R13=MPa, R14=mH2O, R15=mmH2O, R16=Pa) | RXX |
| | Customer Specific (Numbers from Z01 to Z99) | Z## |

# LY14 WinSMART™ Pressure Transmitter



## Description & Features:

- Smart multi-functional digital pressure transmitter designed for industrial applications
- Explosion proof and intrinsically safe designs for hazardous locations
- Stainless steel and aluminum housing
- Gauge and Absolute pressure measurement
- 0.1% accuracy
- Simple to operate 3-push button control with 5-digit display
- 4/20mA plus HART® digital communication
- Simplified re-zero calibration via push-button fuctionality
- 10:1 rangeability allows for installation in any application

## Applications:

- Suitable for pressure measurement in Oil & Gas installations (onshore and offshore), power generation, including renewable energy facilities, waste water locations and many other hazardous areas.

| Specifications | |
|---|---|
| **Output Signal** | 4/20 mA + HART, 2-wire / V = 9-32 VDC |
| **LCD Display** | Available with LCD display (standard) or without LCD display (optional) |
| **Accuracy** | 0.1% URL standard |
| **Stability** | 0.2% of URL for two-years |
| **Temperature Ranges** | Working/Media temperature: -25/95°C (with display -13/203 deg F), -40/185°C (without display -4/158 deg F)<br>Ambient temperature: -40/60°C (with display -40/140 deg F), -40/115°C (without display -4/240 deg F)<br>Storage temperature: -40/110°C (with display -40/85 deg F), -40/230°C (without display -40/446 deg F) |
| **Working Humidity** | 0-100 % relative humidity |
| **Pressure Connection** | 1/2” NPT M or F, G1/2”, M20*1.5 |
| **Housing** | 304SS, 316SS, Rugged die-cast aluminum housing (painted Blue) |
| **Wetted Parts** | 316 SS process connection, 316 L diaphragm |
| **Response Time** | 200ms |
| **Turn On Time** | 2 seconds (with minimum damping enabled) |
| **Power consumption** | <162.8 mW |
| **Vibration Effect** | +/- 0.005% of URL per G to 200 Hz, in accordance to IEC60770-1:1999 |
| **Available Pressure Units** | kPa, Mpa, bar, psi, mmHg, mmH2O, mH2O, inH2O, ftH2O, inHg, mHg, TORR, mbar, g/cm2, kg/cm2, Pa, ATM, m, cm, mm |
| **Protection Class** | EMC, reverse polarity protected |
| **Approval** | ATEX, II 2 G Ex db IIC T6 Gb<br>ATEX, II 1 G Ex ia IIC T1~T6 Ga<br>Intrinsically safe parameters: Ui=28Vdc, Ii=93mA, Pi=0.65W, Ci=5nF, Li=0 mH |
| **Protection Class** | IP66 |
| **Weight** | 5.95 lbs (2.7 kg) |
| **Operational Life** | 100 million cycles |

# LY14 WinSMART™ Pressure Transmitter

## Order Codes

| 4/20 mA + HART® , 2-Wire Option | | ATEX Ex db | | ATEX Ex ia | |
|---|---|---|---|---|---|
| | | Process Connection, 1/2" NPT M | Process Connection, G1/2" | Process Connection, 1/2" NPT M | Process Connection, G1/2" |
| Range (PSI) | Overload Pressure (PSI) | Electrical Entry 1/2" NPT F | Electrical Entry M20*1.5 | Electrical Entry 1/2" NPT F | Electrical Entry M20*1.5 |
| 0/1 psi | 1.5 | LY14HXD3P50G1R2N2W6LS | LY14HXD3P50G1R5G2W6LS | LY14HIA3P50G1R2N2W6LS | LY14HIA3P50G1R5G2W6LS |
| 0/5 psi | 7.5 | LY14HXD3P51G1R2N2W6LS | LY14HXD3P51G1R5G2W6LS | LY14HIA3P51G1R2N2W6LS | LY14HIA3P51G1R5G2W6LS |
| 0/30 psi | 45.0 | LY14HXD3P52G1R2N2W6LS | LY14HXD3P52G1R5G2W6LS | LY14HIA3P52G1R2N2W6LS | LY14HIA3P52G1R5G2W6LS |
| 0/100 psi | 150.0 | LY14HXD3P53G1R2N2W6LS | LY14HXD3P53G1R5G2W6LS | LY14HIA3P53G1R2N2W6LS | LY14HIA3P53G1R5G2W6LS |
| 0/300 psi | 450.0 | LY14HXD3P54G1R2N2W6LS | LY14HXD3P54G1R5G2W6LS | LY14HIA3P54G1R2N2W6LS | LY14HIA3P54G1R5G2W6LS |
| 0/1,000 psi | 1,500.0 | LY14HXD3P55G1R2N2W6LS | LY14HXD3P55G1R5G2W6LS | LY14HIA3P55G1R2N2W6LS | LY14HIA3P55G1R5G2W6LS |
| 0/3,000 psi | 4,500.0 | LY14HXD3P56G1R2N2W6LS | LY14HXD3P56G1R5G2W6LS | LY14HIA3P56G1R2N2W6LS | LY14HIA3P56G1R5G2W6LS |

## Dimensions (mm)

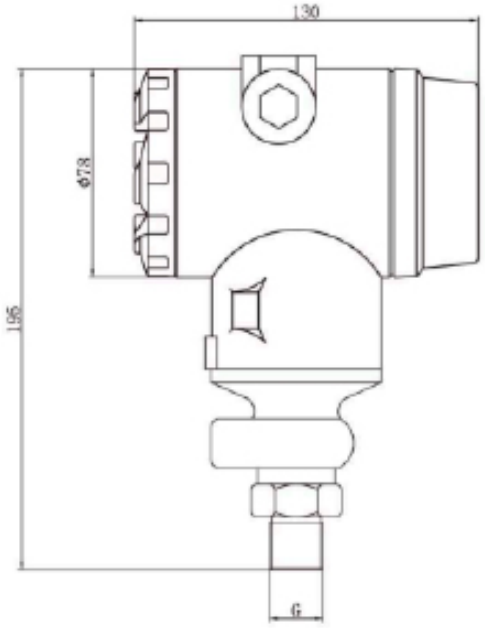


78mm = 3.1"

130mm = 5.1"

195mm = 7.7"

## Wiring Diagram

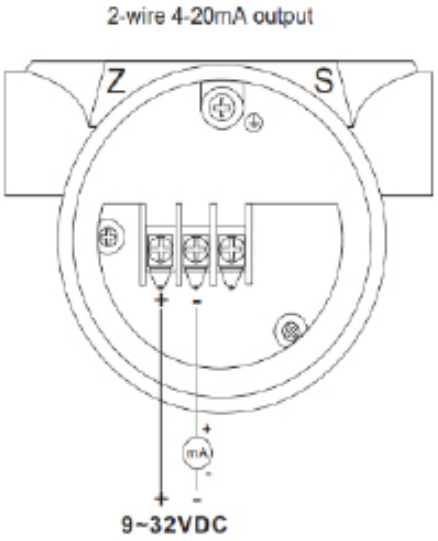


## Pipe Mounting Bracket

WinSMART™ Pressure Transmitter (threaded interface) overall dimensions

(unit: mm)

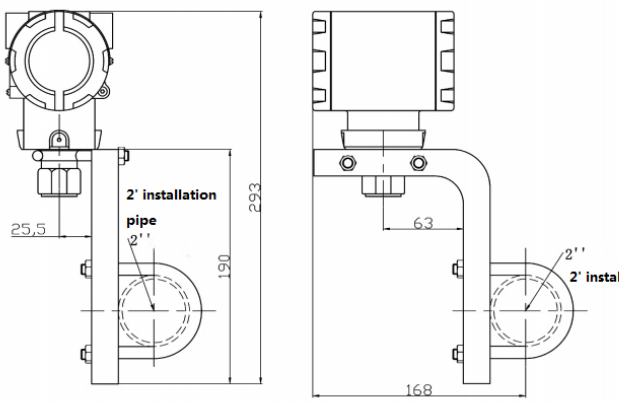


Dimensional drawing of mounting bracket

(unit mm)

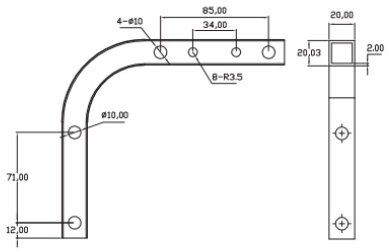


Universal mounting bracket: B58

# LY14 WinSMART™ Pressure Transmitter

## Series Number (how to order)

| LY14 ENGINEERED PART NUMBER | | |
|---|---|---|
| **OUTPUT** | 4…20 mA + HART / 2-wire (standard) | H |
| **AREA CLASSIFICATION** | Hazardous location per ATEX Ex db | X D |
| | Intrinsically Safe per ATEX Ex ia | I A |
| **CASE HOUSING** | Die-Cast Aluminum, Blue | 1 |
| | 304 Stainless Steel | 2 |
| | 316 Stainless Steel | 3 |
| **SERIES PRESSURE RANGE (PSI)** | 0/1 (0.07 bar) | P 5 0 |
| | 0/5 (0.3 bar) | P 5 1 |
| | 0/30 (2.1 bar) | P 5 2 |
| | 0/100 (6.9 bar) | P 5 3 |
| | 0/300 (20.7 bar) | P 5 4 |
| | 0/1,000 (68.9 bar) | P 5 5 |
| | 0/3,000 (206.8 bar) | P 5 6 |
| | Other, specify range | P # # |
| **PRESSURE** | Gauge (standard) | G |
| | Absolute | A |
| **ACCURACY** | 0.10 % (standard) | 1 |
| **ELECTRICAL CONNECTION** | 1/2" NPT F (standard) | R 2 |
| | M20*1.5 F | R 5 |
| **PROCESS CONNECTION** | 1/2" NPT M (standard) | N 2 |
| | 1/2" NPT F | F 2 |
| | 1/4" NPT M | N 4 |
| | G1/2" M | G 2 |
| | M20*1.5 | M 2 |
| **SEALS** | Welded (standard) | W |
| **PRESSURE PORT** | 316 SS (standard) | 6 |
| **DIAPHRAGM** | 316L SS (standard) | L |
| | Hastelloy C | H |
| | Tantalum | T |
| **Fill Fluid** | Silicone Oil (standard) | S |
| | Fluorine Oil | F |
| **SPECIAL** | U-shaped 2" mounting bracket 304SS (standard) | 2 M |
| | Without LCD display | W D |
| | Special | Z # # |

# LY16

# WinSMART™ Explosion Proof Pressure Transmitter



## Description & Features:

- Microprocessor-based high performing transmitter
- Explosion proof smart pressure transmitter for hazardous locations
- Sour gas NACE0175 compliant
- Built-in temperature sensor
- 0.2% standard; 0.5%, 0.1%, 0.075% or 0.05% optional
- Simple to operate 3-push button control
- HART 5, HART 7, Profibus and Modbus/RS485 networking options
- Low power option available
- Re-zero fuction for safe field calibration
- Wide range of accuracies and turndown ratios allow for installation in any application setting
- CRN Registered, up to 6,000 psi
- 5 year warranty

## Applications:

- Pressure monitoring for oil and gas, well head process control, petrochemical installations, power generation equipment and all hazardous locations
- Suitable for general-purpose areas like potable water, installations and hydraulic systems

| Specifications | |
|---|---|
| **Output Signal** | 4/20 mA, 2-wire / V = 10.5-55 Vdc<br>4/20 mA + HART 5, 2-wire / V = 16.5-55 vdc or 12.55-55 Vdc (low power)<br>1/5 Vdc, 3-wire / V = 10.5-55 Vdc<br>Modbus, 4-wire / V = 9-30 Vdc<br>PROFIBUS, 2-wire/ V = 24 Vdc |
| **LCD Display** | LCD display (standard) or without LCD display (optional) |
| **Accuracy** | 0.2% standard; 0.5%, 0.1%, 0.075% or 0.05% optional |
| **Stability** | ±0.1% URL per 5 years |
| **Temperature Ranges** | Working: -40/85°C, -40/185°F (LCD may not be readable at temperatures below -20°C/ -4°F)<br>Storage: -40/110°C (with display -40/85°C), -40/230°F (without display -40/185°F)<br>Media: silicone oil filling: -40/120°C (-40/248°F) |
| **Ambient Temperature Effects (Typical)** | ±(0.075+0.0375TD)%/10°C of span for -40~85°C |
| **Working Humidity** | 5-100% at 40°C (104°F) |
| **Pressure Connection** | 1/4" or 1/2" NPTM or F, 1/4" or 1/2" GM (large 10mm orifice) |
| **Housing** | Rugged die-cast aluminum housing, painted blue |
| **Wetted Parts** | 316L SS |
| **Overload Pressure** | 1.5 x rated pressure |
| **Power Consumption** | =500 mW @ 24 VDC, 20.8 mA (LCD); </= 493mW @ 24VDC, 20.55mA (without LCD) |
| **Wake-Up Time** | 6 seconds |
| **Vibration** | 20g, 20Hz…5kHz<br>According to GB/T 1827.3 / IEC 61298-3 tests, <0.1% URL |
| **Shock** | 20g, 20Hz…5kHz |
| **Pressure Units** | kPa, Mpa, bar, psi, mmHg, mmH2O, mH2O, inH2O, ftH2O, inHg, mHg, TORR, mbar, g/cm2, kg/cm2, Pa, ATM |
| **Available Temp. Units** | Celsius (°C), Fahrenheit (°F) |
| **Protection Class** | EMI, ESD, RFI, reverse polarity protected; Surge protection; IEC 61000-4-2/4-3/4-4/4-5/4-6/4-8S |
| **Approvals** | **SIL 3 Capable**<br>**CSA, for USA & Canada**<br>• Class I, Division 1, Group A,B,C and D T6 \| Class II, Division 1 Group E, F and G T80°C \| Class III<br>**Intertek, for USA & Canada**<br>• Class I, Zone 0 A Ex ia IIC T4 Ga \| Class I, Division 1, Group A-D, T6 \| - 20°C to 60°C IEC 61508: 2010<br>**ATEX**<br>• II 2G Ex db IIC T6 Gb<br>• II 1G Ex ia IIC T6 Ga |
| **Protection Class** | IP66 / IP67 |
| **Weight** | 2.9 lbs (1.3 kg) |
| **Operational Life** | 100 million cycles |

# LY16 WinSMART™ Explosion Proof Pressure Transmitter

## Order Codes

| Pressure Range | Smallest Calibration Span | Low Range Limit (LRL) | Upper Range Limit (URL) | Overload Limit | Quick Codes, per CSA, Stainless Steel Welded Process Connection 1/2" NPT M | | | |
|---|---|---|---|---|---|---|---|---|
| | | | | | 4/20 mA | 4/20 mA + HART (Power Supply = 16.5-55 VDC) | 1/5 VDC | MODBUS RS485 |
| -1/0/1 PSI | 0.7 PSI | -1.0 PSI | 1.0 PSI | 1.5 PSI | LY16P011X | LY16P01HX | LY16P012X | LY16P01RX |
| -3/0/3 PSI | 1.5 PSI | -2.9 PSI | 2.9 PSI | 4.4 PSI | LY16P021X | LY16P02HX | LY16P022X | LY16P02RX |
| -5/0/5 PSI | 3.0PSI | -5.1 PSI | 5.1 PSI | 7.6 PSI | LY16P031X | LY16P03HX | LY16P032X | LY16P03RX |
| -14.5/0/14.5 PSI | 5.1 PSI | -14.5 PSI | 14.5 PSI | 21.8 PSI | LY16P041X | LY16P04HX | LY16P042X | LY16P04RX |
| -14.5/0/30 PSI | 14.5 PSI | -14.5 PSI | 29.0 PSI | 43.5 PSI | LY16P051X | LY16P05HX | LY16P052X | LY16P05RX |
| -14.5/0/100 PSI | 29.0 PSI | -14.5 PSI | 101.5 PSI | 152.3 PSI | LY16P061X | LY16P06HX | LY16P062X | LY16P06RX |
| -14.5/0/150 PSI | 72.5 PSI | -14.5 PSI | 145.0 PSI | 217.6 PSI | LY16P071X | LY16P07HX | LY16P072X | LY16P07RX |
| -14.5/0/250 PSI | 145 PSI | -14.5 PSI | 246.6 PSI | 369.8 PSI | LY16P081X | LY16P08HX | LY16P082X | LY16P08RX |
| -14.5/0/500 PSI | 247 PSI | -14.5 PSI | 507.6 PSI | 761.4 PSI | LY16P091X | LY16P09HX | LY16P092X | LY16P09RX |
| -14.5/0/1,000 PSI | 508 PSI | -14.5 PSI | 1,015.0 PSI | 1,522.9 PSI | LY16P101X | LY16P10HX | LY16P102X | LY16P10RX |
| -14.5/0/2,500 PSI | 1,015 PSI | -14.5 PSI | 2,465.6 PSI | 3,698.5 PSI | LY16P111X | LY16P11HX | LY16P112X | LY16P11RX |
| -14.5/0/5,000 PSI | 2,466 PSI | -14.5 PSI | 5,076.0 PSI | 7,614.5 PSI | LY16P121X | LY16P12HX | LY16P122X | LY16P12RX |
| -14.5/0/6,000 PSI | 2,901 PSI | -14.5 PSI | 5,801.5 PSI | 8,702.26 PSI | LY16P131X | LY16P13HX | LY16P132X | LY16P13RX |
| -14.5/0/8,700 PSI | 4,351 PSI | -14.5 PSI | 8,702.0 PSI | 13,053.4 PSI | LY16P141X | LY16P14HX | LY16P142X | LY16P14RX |
| -14.5/0/10,000 PSI | 5,076 PSI | -14.5 PSI | 10,152.6 PSI | 15,229.0 PSI | LY16P151X | LY16P15HX | LY16P152X | LY16P15RX |
| -14.5/0/14,500 PSI | 7,252 PSI | -14.5 PSI | 14,503.8 PSI | 21,755.7 PSI | LY16P161X | LY16P16HX | LY16P162X | LY16P16RX |

## Dimensions (mm)

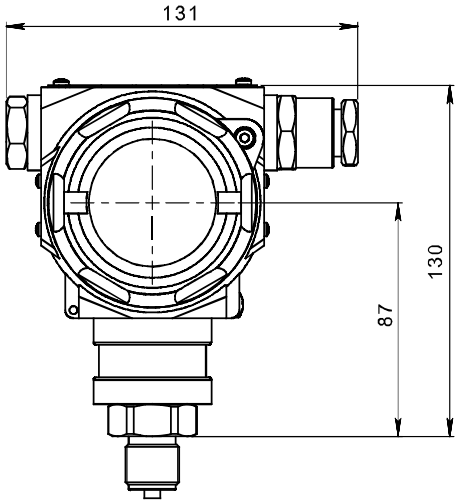


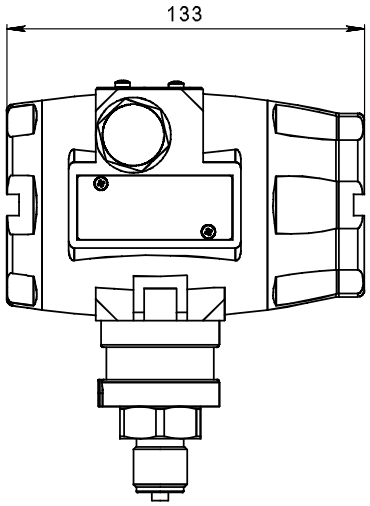


## Process Connections

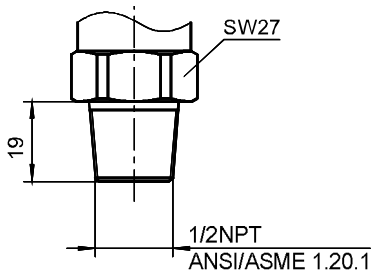


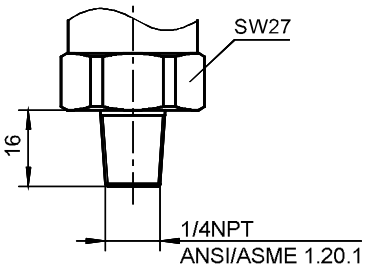


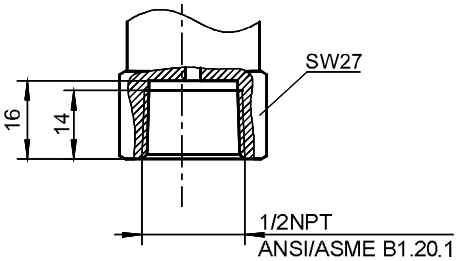


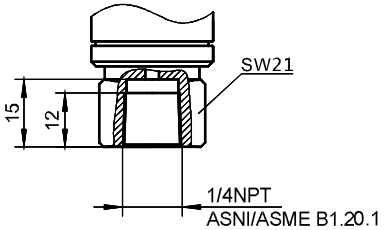

# LY16 WinSMART™ Explosion Proof Pressure Transmitter

## Pin Configurations

### 4-20mA two wires, intrinsic safety (module terminals-four terminals)

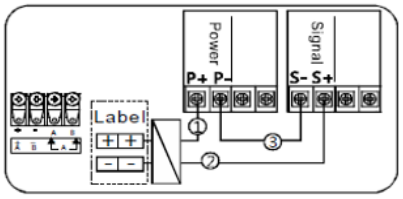


① Power supply+ is connected with transmitter terminals+
② Signal+ is connected with transmitter terminals-
③ Signal- is connected with power supply-

### Module terminals - four terminals

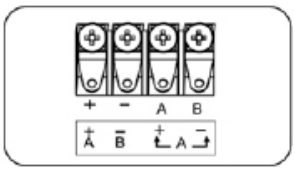


| Label | Two Wires | Three Wires | Four Wires |
|---|---|---|---|
| + | Power+ | Power+ | Power+ |
| - | Power- | Power- | Power- |
| A | | Signal+ | Signal+ |
| B | | | Signal- |

### Module terminals-six terminals (Only for Modbus-RTU/RS485)

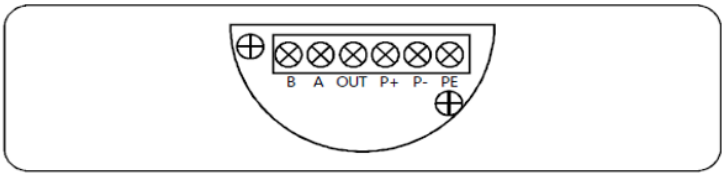


| Label | P+ | P- | A | B | Out | PE |
|---|---|---|---|---|---|---|
| Modbus-RTU/ RS485 | Power+ | Power- | A+ | B- | | Housing |
| Five wires | Power+ | Power- | A+ | B- | Signal+ | Housing ground |

## Series Number (how to order)

LY16 ENGINEERED PART NUMBER — L Y 1 6 - □□ - □ - □□□ - □ - □ - □□ - □□ - □ - □ - □ - □□□

| | | |
|---|---|---|
| **OUTPUT** | 4…20 mA / 2-wire | 1 |
| | 4…20 mA / 2-wire + HART 5 | H |
| | 4…20 mA / 2-wire + HART 7 | H 3 |
| | 4…20 mA / 2-wire + HART 5, 12/55 Vdc | D |
| | 1…5 V, 3-wire | 2 |
| | Profibus PA | P |
| | MODBUS RS485, 4-wire | R |
| **AREA CLASSIFICATION** | Without area classification, standard | S |
| | Hazardous location per CSA, IP66 | X |
| | Instrisically Safe per Intertek, IP67 | I |
| | Explosive atmosphere per ATEX Ex db, IP67 | T |
| | Intrinsically safe per ATEX Ex ia, IP67 | E |
| **SERIES PRESSURE RANGE (PSI)** | -1/0/1, smallest calibration span 0.7 | P 0 1 |
| | -3/0/3, smallest calibration span 1.5 | P 0 2 |
| | -5/0/5, smallest calibration span 3.0 | P 0 3 |
| | -14.5/0/14.5, smallest calibration span 5.1 | P 0 4 |
| | -14.5/0/30, smallest calibration span 14.5 | P 0 5 |
| | -14.5/0/100, smallest calibration span 29.0 | P 0 6 |
| | -14.5/0/150, smallest calibration span 72.5 | P 0 7 |
| | -14.5/0/250, smallest calibration span 145 | P 0 8 |
| | -14.5/0/500, smallest calibration span 247 | P 0 9 |
| | -14.5/0/1,000, smallest calibration span 508 | P 1 0 |
| | -14.5/0/2,500, smallest calibration span 1,015 | P 1 1 |
| | -14.5/0/5,000, smallest calibration span 2,466 | P 1 2 |
| | -14.5/0/6,000, smallest calibration span 2,901 | P 1 3 |
| | -14.5/0/8,700, smallest calibration span 4,351 | P 1 4 |
| | -14.5/0/10,000, smallest calibration span 5,076 | P 1 5 |
| | -14.5/0/14,500, smallest calibration span 7,252 | P 1 6 |
| | Other, specify P17 thru P99 | P # # |
| **PRESSURE** | Gauge (standard) | G |
| | Absolute (Only available in 0-1,450 psi pressure ranges and 0.2% accuracy) | A |
| **ACCURACY** | 0.2%, 2:1 turndown (standard) | 2 |
| | 0.5%, 2:1 turndown | 5 |
| | 0.10% (up to 6,000 psi), 10:1 turndown | 1 |
| | 0.075% (up to 6,000 psi) 20:1 turndown | 7 |
| | 0.05% (up to 1,000 psi) 20:1 turndown | 4 |
| **ELECTRICAL CONNECTION** | Water proof M20x1.5 F, PVC, IP66 | C 1 |
| | Flame proof 1/2" NPT F, SS, IP66 or IP67 | C 2 |
| | Flame proof M20x1.5 F, SS, IP66 or IP67 | C 3 |
| **PROCESS CONNECTION** | 1/4" NPT M | N 4 |
| | 1/2" NPT M (standard) | N 2 |
| | 1/4" NPT F | F 4 |
| | 1/2" NPT F | F 2 |
| | 9/16" Autoclave F | A 9 |
| | G1/4" M (includes M20x1.5 F cable entry) | G 4 |
| | G1/2" M (includes M20x1.5 F cable entry) | G 2 |
| **SEALS** | FKM O-Ring | F |
| | Welded (standard) | W |
| **PRESSURE PORT** | 304 SS (standard) | 4 |
| | 316 SS | 6 |
| | Hastelloy C | H |
| **DIAPHRAGM** | 316L SS (standard) | 6 |
| | Hastelloy C | H |
| **SPECIAL** | U-shaped 2" mounting bracket | 2 M |
| | Without LCD display | W D |
| | Other, specify Z1 thru Z99 | Z # # |

# LTD Differential Pressure Transmitter



## Description & Features:

- Designed to measure the differential pressures of liquids and gases
- Compact yet rugged stainless steel housing with highly accurate stainless steel sensor
- Available ranges from low pressure to 500 PSI (34.5 BAR)
- DIN-style electrical connection, cable outlet also available
- ±0.5% accuracy standard, 0.25% optional
- CE mark and RoHS compliant
- Electromagnetic protection
- 5 year warranty

## Applications:

- Utilized to measure two varying and different pressures. Ideal for across-the-line filters, flow measurement, liquid tank levels and many other Commercial, HVAC and Industrial applications

| Specifications | |
|---|---|
| **Output Signal** | 4-20 mA, 2 wire 0-5 Vdc or 0-10 Vdc or Vac<br>0…10 Vdc, 3-wire / Vs = 10-30 Vdc<br>0…5 Vdc, 3-wire / Vs = 10-30 Vdc<br>1...5 Vdc, 3-wire / Vs = 10-30 Vdc |
| **Accuracy** | ±0.5% Full Scale Output |
| **Overload/Burst Pressure** | 150% / 3 times |
| **Load Resistance** | RL = (U-10)/0.02(Ω) (4~20mA current output), >20KΩ (voltage output) |
| **Long Term Stability** | ±0.25% FSO (typically per year) |
| **Response Time** | 1ms |
| **Storage Temperature** | -10 to 70 deg C (14 to 158 deg F) |
| **Operating Temperature** | -40 to 85 deg C (-40 to 185 deg F) |
| **Insulation Resistance** | >100 MΩ @ 50 VDC |
| **Reverse Polarity Protection** | Yes |
| **Electromagnetic Protection** | EN50081-1/2, EN50082-2 |
| **Enclosure Rating** | IP65 for DIN 43650-A, IP66 for Cable Outlet |
| **Housing** | 1Cr18Ni9Ti |
| **Wetted Parts** | 316L welded sensor |
| **Process Connections** | 1/4” NPT Female or Male, G1/4 Female or Male |
| **Operation LIfe** | 1 million cycles, minimum |
| **Lightning Protection** | Yes |
| **Weight** | 200 grams (0.4 pounds) |

# LTD Differential Pressure Transmitter

## Wiring Diagram

2-wire-system (current)

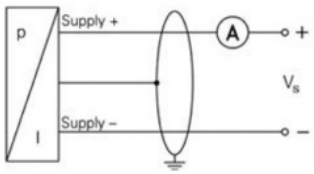


3-wire-system (current / voltage)

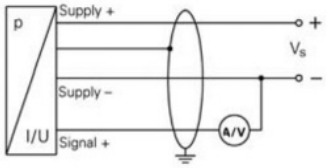


## Dimensions (mm)

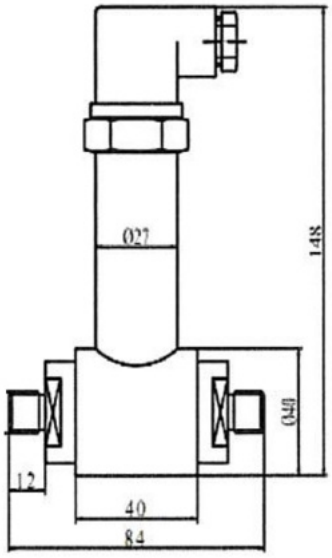


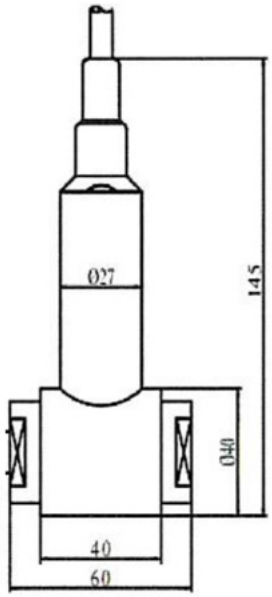


12mm = 0.5"

27mm = 1.1"

40mm = 1.6"

60mm = 2.4"

84mm = 3.3"

145mm = 5.7"

148mm = 5.8"

## Order Codes

| Range (PSI) | Proof-Pressure (PSI) | 4/20mA, 0.5% Accuracy, Vdc Power Supply, DIN Electrical Connection | |
|---|---|---|---|
| | | 1/4" NPT F x F | 1/4" NPT M x M |
| 0-15 PSI (0-1 BAR) | 22.5 | LTD110D015DF46S | LTD110D015DM46S |
| 0-30 PSI (0-2 BAR) | 45.0 | LTD110D025DF46S | LTD110D025DM46S |
| 0-60 PSI (0-4 BAR) | 90.0 | LTD110D035DF46S | LTD110D035DM46S |
| 0-100 PSI (0-6.9 BAR) | 150.0 | LTD110D045DF46S | LTD110D045DM46S |
| 0-160 PSI (0-11 BAR) | 340.0 | LTD110D055DF46S | LTD110D055DM46S |
| 0-200 PSI (0-13.8 BAR) | 300.0 | LTD110D065DF46S | LTD110D065DM46S |
| 0-300 PSI (0-20.7 BAR) | 450.0 | LTD110D075DF46S | LTD110D075DM46S |
| 0-500 PSI (0-34.5 BAR) | 750.0 | LTD110D085DF46S | LTD110D085DM46S |

## Optional LCD Display



## Series Number (how to order)

| LTD Engineering Codes | | LTD | | |

# LY34 WinSMART™ Differential Pressure Transmitter



## Description & Features:

- Smart multi-functional digital differential pressure transmitter designed for industrial applications
- Explosion proof and intrinsically safe designs for hazardous locations
- Stainless steel and aluminum housing
- Gauge, absolute and differential pressure measurement
- 0.1% accuracy
- Simple to operate 3-push button control with 5-digit display and 100% bar graph
- 4/20mA plus HART® digital communication
- Simplified re-zero calibration via push-button fuctionality
- 10:1 rangeability allows for installation in any application

## Applications:

- Ideally suited for hazardous locations requiring either a stainless steel or die-cast aluminum housing.
- Suitable for differential pressure measurement in Oil & Gas installations (on-shore and offshore), power generation, including renewable energy facilities, filtration monitoring, tank level and flow measurement in hazardous areas.

| Specifications | |
|---|---|
| Output Signal | 4/20 mA + HART, 2-wire / V = 9-32 VDC |
| LCD Display | Available with LCD display (standard) or without LCD display (optional) |
| Accuracy | 0.1% URL standard |
| Stability | 0.2% of URL for two-years |
| Temperature Ranges | Working/Media temperature: -25/95°C (with display -13/203 deg F), -40/185°C (without display -4/158 deg F)<br>Ambient temperature: -40/60°C (with display -40/140 deg F), -40/115°C (without display -4/240 deg F)<br>Storage temperature: -40/110°C (with display -40/85 deg F), -40/230°C (without display -40/446 deg F) |
| Working Humidity | 0-100 % relative humidity |
| Housing | 304SS, 316SS, Rugged die-cast aluminum housing (painted Blue) |
| Pressure Connection | 2 x 1/4" NPT F, 1/2" NPT F adapters available |
| Diaphragm | 316L SS with BUNA-N, Hastelloy® C or Monel or Tantalum plus Vitron or PTFE o-rings optional |
| Drains & Vents | 304SS or 316SS |
| Response Time | 200 ms |
| Turn on Time | 2 seconds (with minimum Damping enabled) |
| Power Consumption | <162.8 mW |
| Vibration Effect | +/- 0.005% of URL per G to 200 Hz, in accordance to IEC60770-1:1999 |
| Available pressure units | kPa, Mpa, bar, psi, mmHg, mmH2O, mH2O, inH2O, ftH2O, inHg, mHg, TORR, mbar, g/cm2, kg/cm2, Pa, ATM, m, cm, mm |
| Protection Class | EMC, reverse polarity protected |
| Approval | ATEX, II 2 G Ex db IIC T6 Gb<br>ATEX, II 1 G Ex ia IIC T1~T6 Ga<br>Intrinsically safe parameters: Ui=28Vdc, Ii=93mA, Pi=0.65W, Ci=5nF, Li=0 mH |
| Protection Class | IP66 |
| Weight | 15.9 lbs (7.2 kg) |
| Operational Life | 100 million cycles |

# LY34 WinSMART™ Differential Pressure Transmitter

## Order Codes

| 4/20 mA + HART® , 2-Wire Option | | ATEX Ex db | | ATEX Ex ia | |
|---|---|---|---|---|---|
| | | Process Connection, 1/4" NPT F | Process Connection, 1/4" NPT F | Process Connection, 1/4" NPT F | Process Connection, 1/4" NPT F |
| Range (PSI) | Overload Pressure (PSI) | Electrical Entry 1/2" NPT F | Electrical Entry M20*1.5 | Electrical Entry 1/2" NPT F | Electrical Entry M20*1.5 |
| 0/0.2 psi (0/6"H2O) | 1.0 | LY34H1XD3D50D1R2F1B6LS | LY34H1XD3D50D1R5F1B6LS | LY34H1IA3D50D1R2F1B6LS | LY34H1IA3D50D1R5F1B6LS |
| 0/1 psi | 1.5 | LY34H1XD3D51D1R2F1B6LS | LY34H1XD3D51D1R5F1B6LS | LY34H1IA3D51D1R2F1B6LS | LY34H1IA3D51D1R5F1B6LS |
| 0/5 psi | 7.5 | LY34H1XD3D52D1R2F1B6LS | LY34H1XD3D52D1R5F1B6LS | LY34H1IA3D52D1R2F1B6LS | LY34H1IA3D52D1R5F1B6LS |
| 0/30 psi | 45.0 | LY34H1XD3D53D1R2F1B6LS | LY34H1XD3D53D1R5F1B6LS | LY34H1IA3D53D1R2F1B6LS | LY34H1IA3D53D1R5F1B6LS |
| 0/100 psi | 150.0 | LY34H1XD3D54D1R2F1B6LS | LY34H1XD3D54D1R5F1B6LS | LY34H1IA3D54D1R2F1B6LS | LY34H1IA3D54D1R5F1B6LS |
| 0/300 psi | 450.0 | LY34H1XD3D55D1R2F1B6LS | LY34H1XD3D55D1R5F1B6LS | LY34H1IA3D55D1R2F1B6LS | LY34H1IA3D55D1R5F1B6LS |
| 0/1,000 psi | 1,500.0 | LY34H1XD3D56D1R2F1B6LS | LY34H1XD3D56D1R5F1B6LS | LY34H1IA3D56D1R2F1B6LS | LY34H1IA3D56D1R5F1B6LS |

## Dimensions (mm)

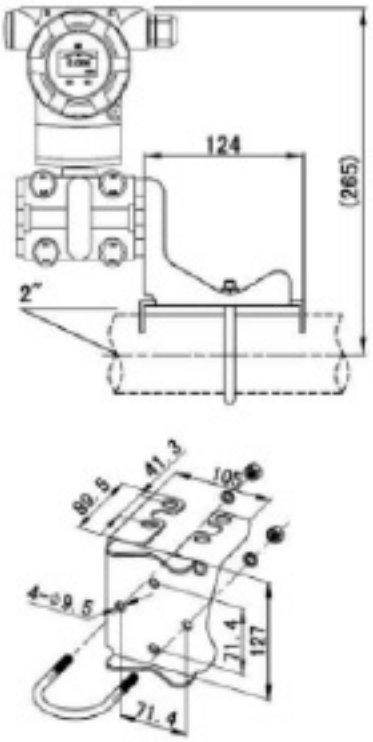


LY34B4

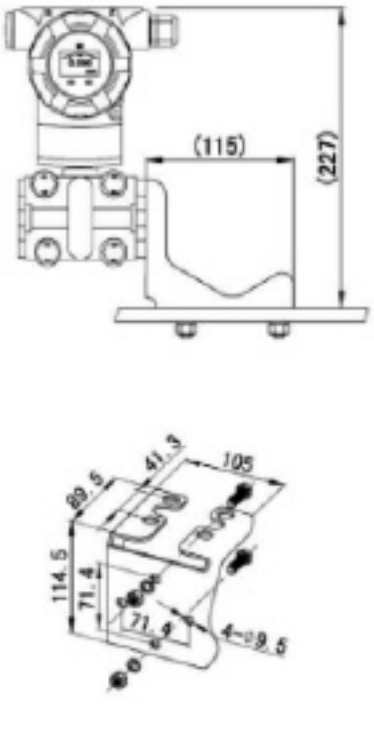


LY34B5

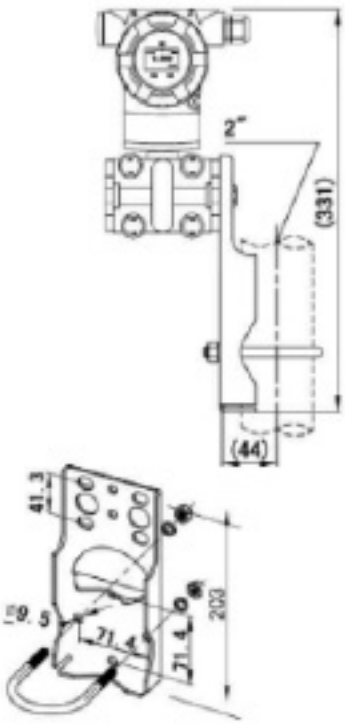


LY34B6

# LY34 WinSMART™ Differential Pressure Transmitter

## Wiring Diagram

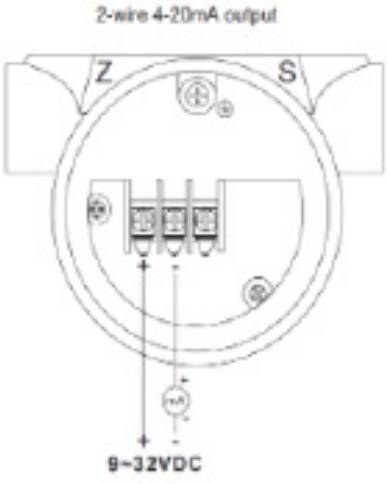


## Order Codes

| | | | | | | | | | | | | | | |
|---|---|---|---|---|---|---|---|---|---|---|---|---|---|---|
| **LY34 CONFIGURED PART NUMBER** | | -□□ | -□□ | -□ | -□□□ | -□ | -□ | -□□ | -□□ | -□ | -□ | -□□ | -□□□ | |
| **OUTPUT** | 4...20 Ma + HART / 2-wire, linear output | H 1 | | | | | | | | | | | | |
| | 4...20 Ma + HART / 2-wire, square root output (>5psi) | H 2 | | | | | | | | | | | | |
| **AREA CLASSIFICATION** | Hazardous location per ATEX Ex db | | X D | | | | | | | | | | | |
| | Intrinsically Safe per ATEX Ex ia | | I A | | | | | | | | | | | |
| **CASE HOUSING** | Die-Cast Aluminum, Blue | | | 1 | | | | | | | | | | |
| | 304 Stainless Steel | | | 2 | | | | | | | | | | |
| | 316 Stainless Steel | | | 3 | | | | | | | | | | |
| **SERIES PRESSURE RANGE (PSI D)** | 0/0.2 | | | | D 5 0 | | | | | | | | | |
| | 0/1 | | | | D 5 1 | | | | | | | | | |
| | 0/5 | | | | D 5 2 | | | | | | | | | |
| | 0/30 | | | | D 5 3 | | | | | | | | | |
| | 0/100 | | | | D 5 4 | | | | | | | | | |
| | 0/300 | | | | D 5 5 | | | | | | | | | |
| | 0/1,000 | | | | D 5 6 | | | | | | | | | |
| | Other, specify range | | | | D # # | | | | | | | | | |
| **PRESSURE** | Differential | | | | | D | | | | | | | | |
| | Absolute | | | | | A | | | | | | | | |
| **ACCURACY** | 0.10 % | | | | | | 1 | | | | | | | |
| **ELECTRICAL CONNECTION** | 1/2" NPT F | | | | | | | R 2 | | | | | | |
| | M20*1.5 F | | | | | | | R 5 | | | | | | |
| **PROCESS CONNECTION** | Double flange 1/4" NPT F, drain in rear | | | | | | | | F 1 | | | | | |
| | Double flange 1/4" NPT F, drain in upper | | | | | | | | F 2 | | | | | |
| | Double flange 1/4" NPT F, drain in lower | | | | | | | | F 3 | | | | | |
| **SEALS** | Buna-N (NBR) | | | | | | | | | B | | | | |
| | Viton (FKM) | | | | | | | | | V | | | | |
| | Low Temperature Viton | | | | | | | | | L | | | | |
| **PRESSURE PORT** | 316 SS | | | | | | | | | | 6 | | | |
| **DIAPHRAGM / FILL FLUID** | 316L SS + Silicone Oil | | | | | | | | | | | L S | | |
| | Hastelloy C + Silicone Oil (>5psi) | | | | | | | | | | | H S | | |
| | 316L SS + Fluorine Oil | | | | | | | | | | | L F | | |
| **SPECIAL** | 2" Tube-type Curved Mounting Bracket, 304SS | | | | | | | | | | | | B 4 | |
| | Wall Mounted Bracket, 304SS | | | | | | | | | | | | B 5 | |
| | 2" Tube-type Flat Mounting Bracket, 304SS | | | | | | | | | | | | B 6 | |
| | Without LCD display | | | | | | | | | | | | W D | |
| | Adapters 1/2" NPT (F) | | | | | | | | | | | | A 2 | |
| | Special | | | | | | | | | | | | Z # # | |

# LY36 WinSMART™ Explosion Proof Differential Pressure Transmitter

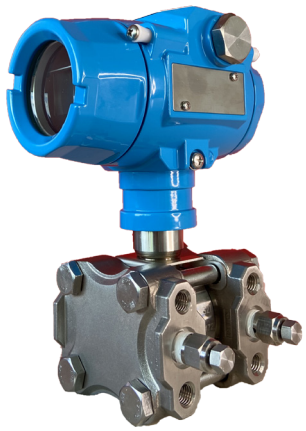

## Description & Features:

- Monosilicone-based high performing transmitter
- Explosion proof smart differential pressure transmitter for hazardous locations
- Sour gas NACE0175 compliant and CRN Registered
- Built-in temperature sensor
- 0.075% or 0.05% accuracy
- Simple to operate 3-push button control, Low power option available
- HART 5, HART 7, Profibus and Modbus/RS485 networking options
- Re-zero fuction for safe field calibration
- 20:1 turndown allows for installation in any application setting
- 5 year Warranty

## Applications:

- Differential pressure monitoring for oil and gas installations, well head process control, petrochemical installations, power generation equipment and all hazardous locations

| Specifications | |
|---|---|
| **Output Signal** | 4/20 mA, 2-wire / V = 10.5-55 Vdc<br>4/20 mA + HART 5, 2-wire / V = 16.5-55 vdc or 12.55-55 Vdc (low power)<br>1/5 Vdc, 3-wire / V = 10.5-55 Vdc<br>Modbus, 4-wire / V = 9-30 Vdc<br>PROFIBUS, 2-wire / V = 24 Vdc |
| **LCD Display** | Available with LCD display (standard) or without LCD display (optional) |
| **Accuracy** | 0.075% or 0.05% accuracy |
| **Ambient Temp. Effects** | 24 “H2O: ±(0.05td+0.1) %/10°C of span<br>160 “H20, 1,000 “H20, 145 psi, 435 psi, 1,450 psi: ±(0.0375TD+0.075) %/10°C of span |
| **Stability** | ±0.1% URL per 5 years |
| **Temperature Ranges** | Working: -40/85°C, -40/185°F (LCD may not be readable at temperatures below -20°C/ -4°F)<br>Storage: -40/110°C (with display -40/85°C), -40/230°F (without display -40/185°F)<br>Media: silicone oil filling: -40/120°C (-40/248°F) |
| **Working Humidity** | 5-100% at 40°C (104°F) |
| **Pressure Connection** | 1/4” or 1/2” NPTM or F, 1/4” or 1/2” GM (large 12mm orifice) |
| **Housing** | Rugged die-cast aluminum housing, painted blue |
| **Wetted Parts** | 316L SS with PTFE o-ring (Hastelloy® C optional) |
| **Overload Pressure** | Maximum of 3,600 or 6,000 psi |
| **Power Consumption** | =500 mW @ 24 VDC, 20.8 mA (LCD); </= 493mW @ 24VDC, 20.55mA (without LCD) |
| **Wake Up Time** | 6 seconds |
| **Vibration** | 20g, 20Hz…5kHz<br>According to GB/T 1827.3 / IEC 61298-3 tests, <0.1% URL |
| **Shock** | 20g, 20Hz…5kHz |
| **Available Pressure Units** | kPa, Mpa, bar, psi, mmHg, $mmH_2O$, $mH_2O$, $inH_2O$, $ftH_2O$, inHg, mHg, TORR, mbar, $g/cm^2$, $kg/cm^2$, Pa, ATM |
| **Available Temp. Units** | Celsius (°C), Fahrenheit (°F) |
| **Protection Class** | EMI, ESD, RFI, reverse polarity protected; Surge protection IEC 61000-4-2/4-3/4-4/4-5/4-6/4-8 |
| **Approvals** | **SIL 3 Capable**<br>**CSA, for USA & Canada**<br>• Class I, Division 1, Group A,B,C and D T6 \| Class II, Division 1 Group E,F and G T80°C \| Class III<br>**Intertek, for USA & Canada**<br>• Class I, Zone 0 A Ex ia IIC T4 Ga \| Class I, Division 1, Group A-D, T6 \| - 20°C to 60°C<br>**ATEX**<br>• II 2G Ex db IIC T6 Gb, II 1G Ex ia IIC T6 Ga |
| **Protection Class** | IP66 / IP67 |
| **Weight** | 8.8 lbs (4.0 kg) |
| **Operational Life** | 100 million cycles |

# LY36 WinSMART™ Explosion Proof Differential Pressure Transmitter

## Order Codes

| Differential Pressure Range | Smallest Calibration Span | Low Range Limit (LRL) | Upper Range Limit (URL) | Static Pressure Limit | High Side Overload Limit | Low Side Overload Limit | Quick Codes, per CSA, Stainless Steel O-Ring, Process Connection 1/2" NPT F | | | |
|---|---|---|---|---|---|---|---|---|---|---|
| | | | | | | | 4/20 mA | 4/20 mA + HART | 1/5 VDC | MODBUS RS485 |
| -24/0/24 "H20 | 0.09 "H2O | -24 "H2O | 24 "H2O | 3,626 PSI | 3,626 PSI | 2,321 PSI | LY36D101X | LY36D10HX | LY36D102X | LY36D10RX |
| -160/0/160 "H2O | 1.7 "H2O | -160 "H2O | 160 "H2O | 5,801 PSI | 3,626 PSI | 2,321 PSI | LY36D201X | LY36D20HX | LY36D202X | LY36D20RX |
| -1,000/0/1,000 "H2O | 10.1 "H2O | -1,000 "H2O | 1,000 "H2O | 5,801 PSI | 3,626 PSI | 2,321 PSI | LY36D301X | LY36D30HX | LY36D302X | LY36D30RX |
| -72.5/0/145 PSI | 1.6 PSI | -72.5 PSI | 145 PSI | 5,801 PSI | 3,626 PSI | 2,321 PSI | LY36D501X | LY36D50HX | LY36D502X | LY36D50RX |
| -72.5/0/435 PSI | 4.5 PSI | -72.5 PSI | 435 PSI | 5,801 PSI | 3,626 PSI | 2,321 PSI | LY36D601X | LY36D60HX | LY36D602X | LY36D60RX |
| -72.5/0/1,450 PSI | 14.5 PSI | -72.5 PSI | 1,450 PSI | 5,801 PSI | 3,626 PSI | 2,321 PSI | LY36D701X | LY36D70HX | LY36D702X | LY36D70RX |

## Dimensions (mm)

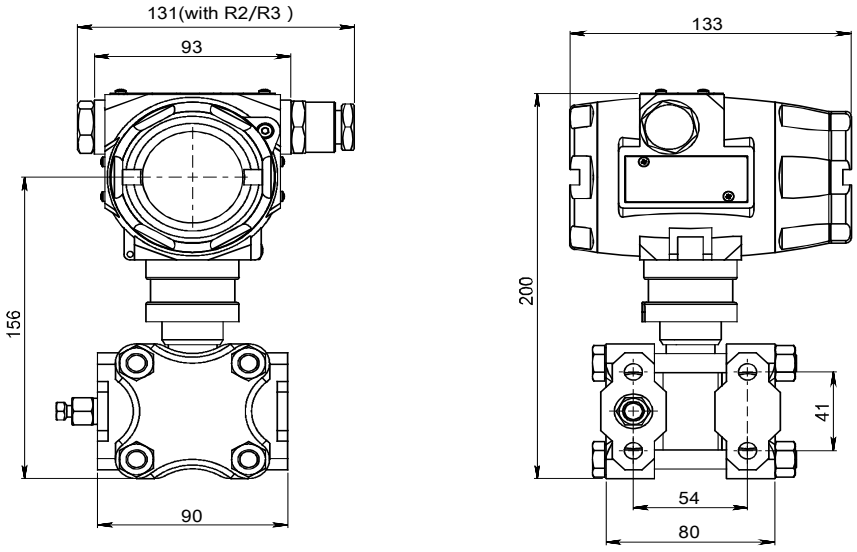


## Pin Configurations

### 4-20mA two wires, intrinsic safety (module terminals-four terminals)

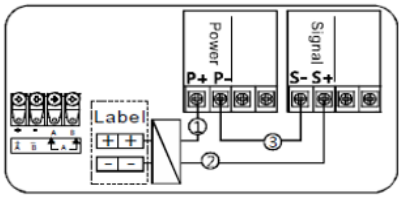


① Power supply+ is connected with transmitter terminals+
② Signal+ is connected with transmitter terminals-
③ Signal- is connected with power supply-

### Module terminals - four terminals

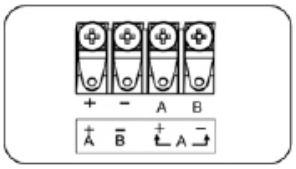


| Label | Two Wires | Three Wires | Four Wires |
|---|---|---|---|
| + | Power+ | Power+ | Power+ |
| - | Power- | Power- | Power- |
| A | | Signal+ | Signal+ |
| B | | | Signal- |

### Module terminals-six terminals (Only for Modbus-RTU/RS485)

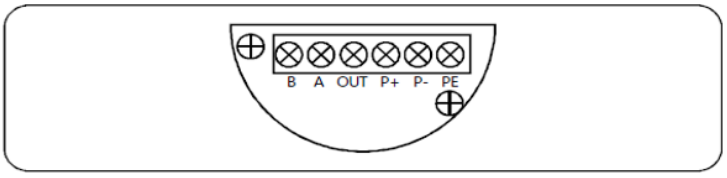


| Label | P+ | P- | A | B | Out | PE |
|---|---|---|---|---|---|---|
| Modbus-RTU/ RS485 | Power+ | Power- | A+ | B- | | Housing |
| Five wires | Power+ | Power- | A+ | B- | Signal+ | Housing ground |

Hastelloy® is a registered trademark of Haynes International, Inc.

## Mounting Adapters

### Adaptor A1 (mm)

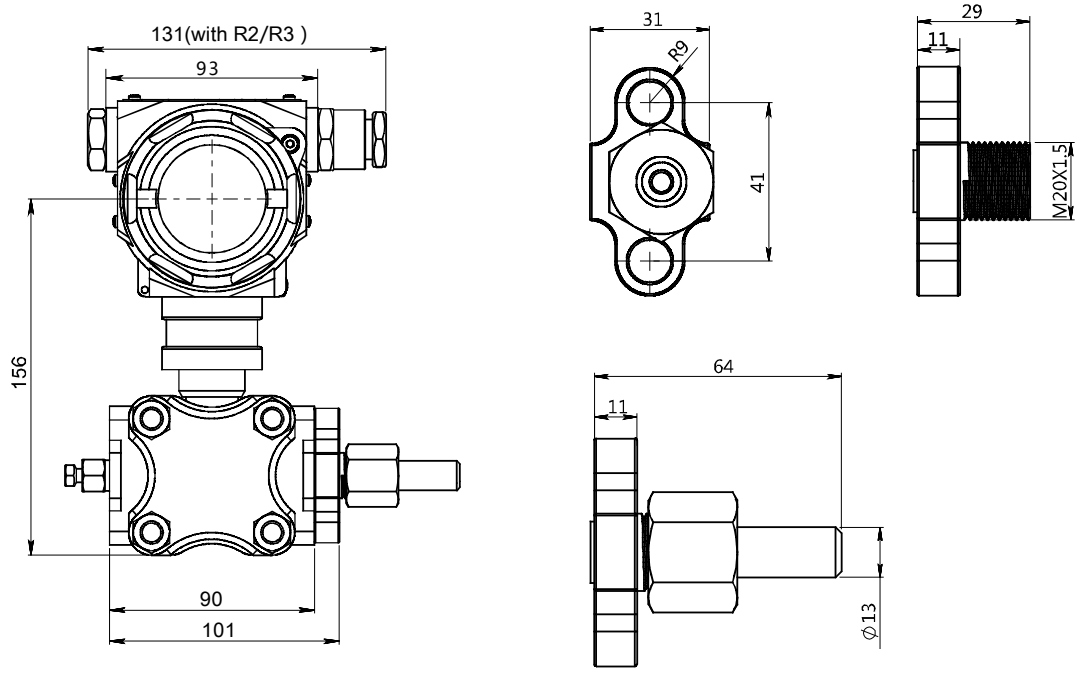


### Adaptor A2 (mm)

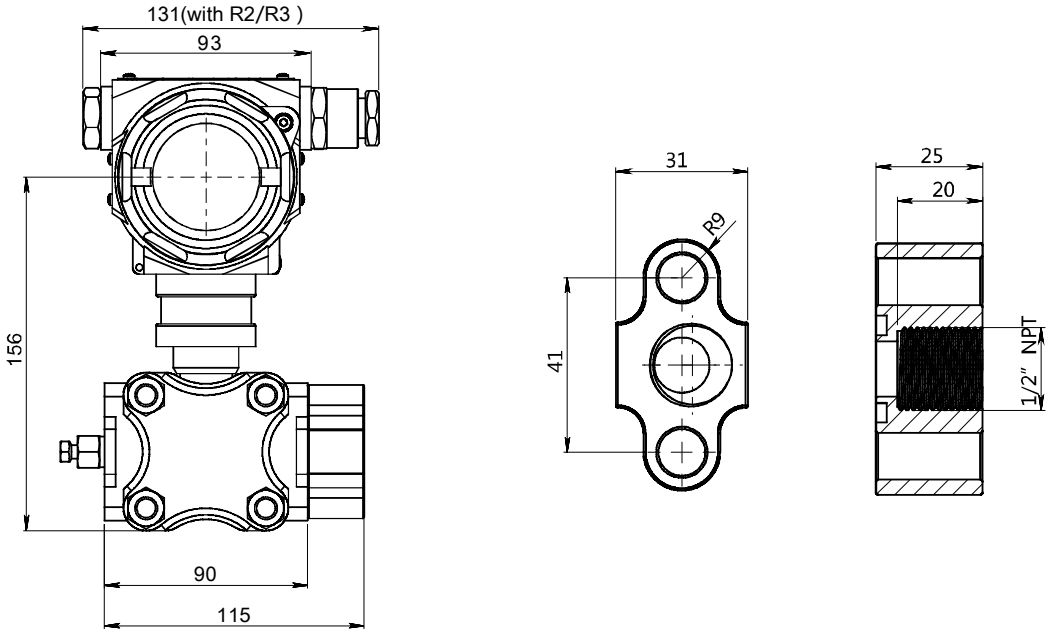

# WinSMART™ Explosion Proof Differential Pressure Transmitter



## Mounting Brackets

### Pipe Mounting Bracket (Vertical) B1 (mm)

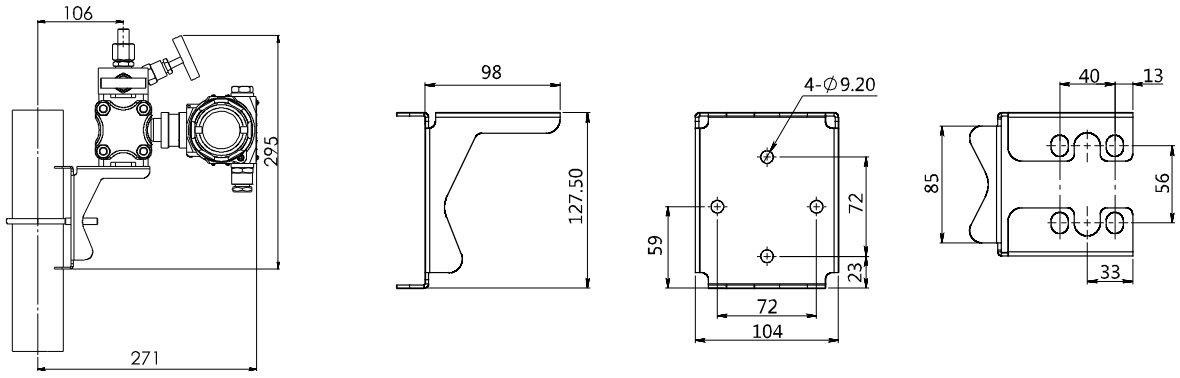


### Plate Mounting Bracket B2 (mm)

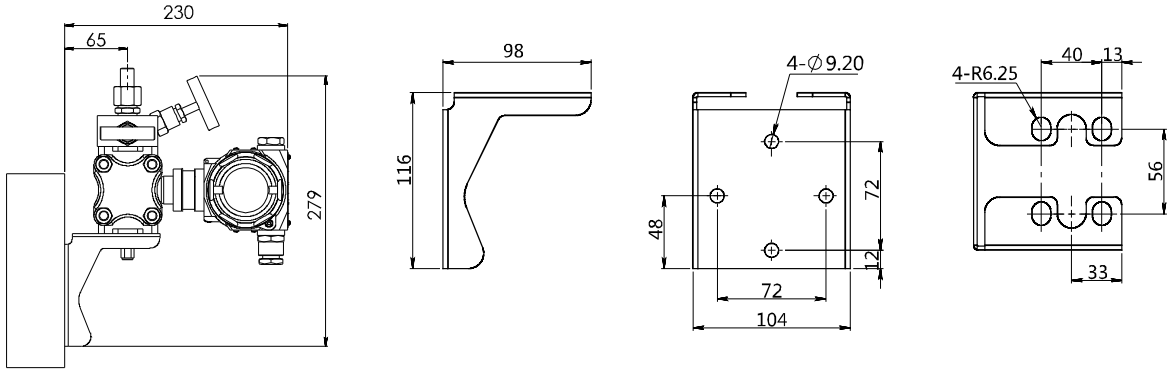


### Pipe Mounting Bracket (Horizontal) B3 (mm)

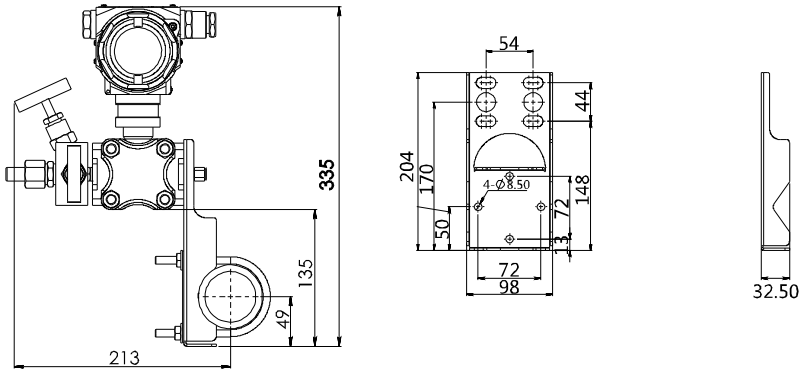


## Process Connection

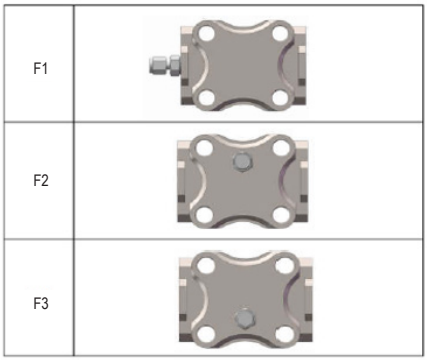


| Code | Item | Description |
|---|---|---|
| F1 | Flange/ Drain Valve | H structure, double flanges, process connection 1/4-18NPT(F), drain valve on the rear end of flange, material 316 Ss |
| F2 | | H structure, double flanges, process connection 1/4-18NPT(F), drain valve on the up part of flange, material 316 SS |
| F3 | | H structure, double flanges, process connection 1/4-18NPT(F), drain valve on the down part of flange, material 316 SS |

# LY36 WinSMART™ Explosion Proof Differential Pressure Transmitter

## Wetted Parts

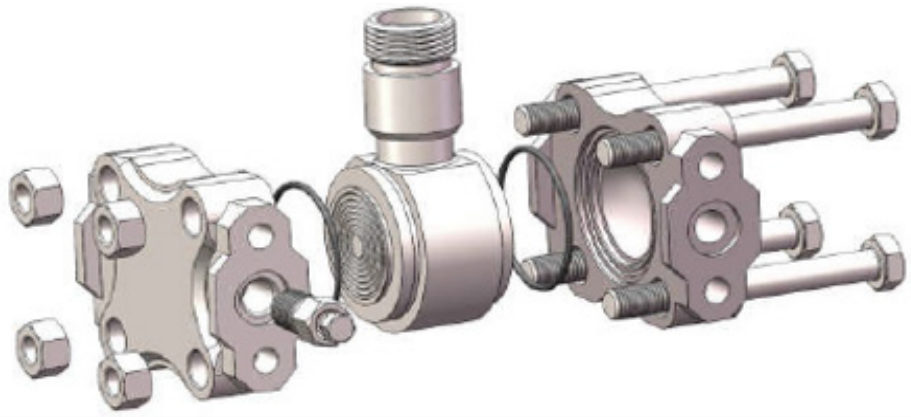

## Series Number (how to order)

| LY36 ENGINEERED PART NUMBER | | L Y 3 6 - □□ - □ - □□□ - □ - □ - □□ - □□ - □ - □ - □ - □□□ |
|---|---|---|
| **OUTPUT** | 4…20 mA / 2-wire | 1 |
| | 4…20 mA / 2-wire + HART 5 | H |
| | 4…20 mA / 2-wire + HART 7 | H 3 |
| | 4…20 mA / 2-wire + HART 5, 12/55 Vdc | D |
| | 1…5 V, 3-wire | 2 |
| | Profibus PA | P |
| | MODBUS RS485, 4-wire | R |
| **AREA CLASSIFICATION** | Without area classification, standard | S |
| | Hazardous location per CSA, IP66 | X |
| | Instrisically Safe per Intertek, IP67 | I |
| | Explosive atmosphere per ATEX Ex db, IP67 | T |
| | Intrinsically safe per ATEX Ex ia, IP67 | E |
| **SERIES PRESSURE RANGE (inches H2O)** | -24/0/24, smallest calibration span 0.08 | D 1 0 |
| | -160/0/160, smallest calibration span 1.6 | D 2 0 |
| | -1,000/0/1,000, smallest calibration span 10.0 | D 3 0 |
| **SERIES PRESSURE RANGE (psi)** | -72.5/0/145, smallest calibration span 1.6 | D 5 0 |
| | -72.5/0/435, smallest calibration span 4.4 | D 6 0 |
| | -72.5/0/1,450, smallest calibration span 14.5 | D 7 0 |
| | Other, specify D01 thru D99 | D # # |
| **PRESSURE** | Differential (standard) | D |
| | Absolute (<1,450 psi only) | A |
| **ACCURACY** | 0.075%, 20:1 turndown (standard) | 2 |
| | 0.05%, 20:1 turndown | 5 |
| **ELECTRICAL CONNECTION** | Water proof M20x1.5 F, PVC, IP66 | C 1 |
| | Flame proof 1/2" NPT F, SS, IP66 or IP67 (standard) | C 2 |
| | Flame proof M20x1.5 F, SS, IP66 or IP67 | C 3 |
| **PROCESS CONNECTION** | Double flange 1/4" NPT (F), drain in rear (standard) | F 1 |
| | Double flange 1/4" NPT (F), drain in upper | F 2 |
| | Double flange 1/4" NPT (F), drain in lower | F 3 |
| **SEALS** | PTFE O-Ring | F |
| **PRESSURE PORT** | 316 SS | 6 |
| **DIAPHRAGM** | 316L SS (standard) | 6 |
| | Hastelloy C | H |
| **SPECIAL** | Without LCD display | W D |
| | Adaptor with guided pipe M20x1.5 (M) | A 1 |
| | Adaptor 1/2" NPT (F) (standard) | A 2 |
| | Horizontal pipe mounting kit CS, 2" | B 1 |
| | Horizontal plate mounting kit CS | B 2 |
| | Vertical pipe mounting kit CS, 2" | B 3 |
| | 3-handle manifold, angle, soft seat, PTFE, MVA3ASS2D | M 3 |
| | 5-handle manifold, angle, soft seat, PTFE, MVA5ASS2D | M 5 |
| | 3-handle manifold, angle, hard seat, PTFE, MVA3ASH2D | M 3 H |
| | 5-handle manifold, angle, hard seat, PTFE,MVA5ASH2D | M 5 H |
| | Other, specify Z1 thru Z99 | Z # # |

# LFA Low Pressure Differential Transmitter




## Description & Features:

- Low pressure differential transmitter with LCD option
- Monitors and measures positive, negative and differentlal pressure types
- Highly sensitive pressure sensors offer quick measurement and long term
- stability
- Suitable for clean, non-flammable or corrosive gases
- ±1% Full Scale Output
- UL94-V0, flame retardant standard
- Electromagnetic protection
- 5 Year Warranty

## Applications:

- Ideally suited for the pressure and differential pressure measurement of air and non-corrosive gases within HVAC control systems, including ventilation monitoring, fan control, furnace ventilation and clean rooms

| Specifications | |
|---|---|
| **Output Signal** | 4…20 mA, 2-wire<br>0…10 Vdc, 3-wire<br>RS485, Modbus-RTU |
| **Power Supply** | 15~30 Vdc / 15~26 Vac |
| **Load Resistance** | <750 Ω |
| **Accuracy** | ±1% Full Scale Output |
| **Overload Pressure** | 10 times full-scale pressure |
| **Burst Pressure** | 15 times full-scale pressure |
| **Long-Term Stability** | ±0.01% FSO / °C |
| **Response Time** | 1s |
| **Operating Temperature** | -10 to 85 deg C (14 to 185 deg F) |
| **Compensation Temperature** | -10 to 60 deg C (14 to 140 deg F) |
| **Enclosure Rating** | IP54 |
| **Enclosure Protection** | ABS & Polycarbonate (versatile thermoplastic known for its strength and impact resistance)<br>UL94-V0, flame retardant standard |
| **Process Connection** | 2 x 6mm (0.24”) Outer Dimension |

## Wiring Diagram

| Output signal | Schematic diagram of wiring | |
|---|---|---|
| 4-20mA (two-wire) |  | Red line: 24V+<br>Black line: Signal+ |
| 0-10V (three-wire) |  | Brown line: 24V+<br>Black wire: 24V-<br>Blue line: Signal+ |
| RS485 communication |  | Brown line: 24V+<br>Black wire: 24V-<br>Blue line: RS485+<br>Green line: RS485- |

# LFA Low Pressure Differential Transmitter

## Dimensions (with or without LCD)

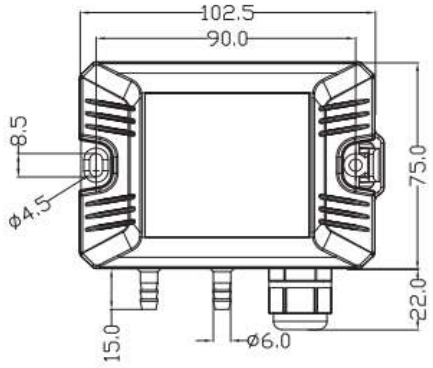




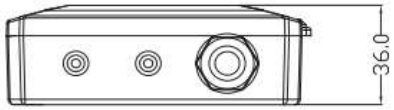


**Units: mm**

*4.5mm = 0.18”*
*6mm = 0.24”*
*8.5mm = 0.33”*
*15mm = 0.6”*
*22mm = 0.9”*
*36mm = 1.4”*
*75mm = 3.0”*
*90mm = 3.5”*
*102.5mm = 4.0”*

## Engineering Codes

LFA Engineering Codes

| | | L F A - □□ - □□ - □□□□□ - □□ - □□ - □□□ |
|---|---|---|
| **OUTPUT AND DISPLAY** | 4…20 mA / 0…10 Vdc, LCD display | 1 D |
| | 4…20 mA / 0…10 Vdc, no-LCD display | 1 N |
| | RS485, Modbus-RTU & LCD display | R D |
| | RS485, Modbus-RTU & no-LCD display | R N |
| | Other output type, specify | # # |
| **ELECTRICAL CONNECTION** | Cable gland, 4-8mm (0.16"-0.31") cable diameter | C 1 |
| **SERIES PRESSURE RANGE (INCHES OF WATER)** | -0.5/0/5, -0.25/0/0.25, 0/0.5, 0/0.25 "H2O | H 0 0 5 |
| | -1/0/1, -0.5/0/0.5, 0/1, 0/0.5 "H2O | H 0 1 0 |
| | -4/0/4, -2/0/2, 0/4, 0/2 "H2O | H 0 4 0 |
| | -10/0/10, -5/0/5, 0/10, 0/5 "H2O | H 1 0 0 |
| | -20/0/20, -10/0/10, 0/20, 0/10 "H2O | H 2 0 0 |
| | -40/0/40, -30/0/30, 0/40, 0/30 "H2O - MOQ | H 4 0 0 |
| | -60/0/60, -50/0/50, 0/60, 0/50 "H2O - MOQ | H 6 0 0 |
| | -80/0/80, -70/0/70, 0/80, 0/70 "H2O - MOQ | H 8 0 0 |
| | -100/0/100, -90/0/90, 0/100, 0/90 "H2O - MOQ | H 1 0 0 0 |
| **SERIES PRESSURE RANGE (PA)** | -100/0/100, -50/0/50, 0/100, 0/50 PA | X 0 1 0 |
| | -250/0/250, -125/0/125, 0/250, 0/125 PA | X 0 2 5 |
| | -1000/0/1000, -500/0/500, 0/1000, 0/500 PA | X 1 0 0 |
| | -2000/0/2000, -1000/0/1000, 0/2000, 0/1000 PA | X 2 0 0 |
| | -3000/0/3000, -1500/0/1500, 0/3000, 0/1500 PA | X 3 0 0 |
| | -4000/0/4000, -2000/0/2000, 0/4000, 0/2000 PA | X 4 0 0 |
| | Other pressure range, specify | # # # # |
| **ACCURACY** | 1% Differential pressure | 1 D |
| **PROCESS CONNECTION** | 6mm (0.24") barbed for ID tubing | G 4 |
| | Other connection, specify | # # |
| **SPECIAL** | Additonal 1.5m (5') clear platic tubing, 2 x static tips, 4 x metal screws (LFA1M if ordered separately) | 1 M |
| | Special | Z # # |

# LFD Low Pressure Digital Differential Gauge With Transmitter Output




## Description & Features:

- Very low pressure differential pressure gauge with optional transmitter output
- Able to handle both unidirectional or bidirectional ranges
- Available ranges from very low vacuum prssures to 20”H2O (1,000 Pa)
- Multiple pressure unit options
- ±1% or ±2% accuracy depending on pressure range
- Powered by 3V battery or 24VDC power supply
- Multi-function features including low/high alarm with light
- Reverse polarity protection included
- Installation screws, mounting brackets and clear tubing included
- CE mark
- 5 Year Warranty

## Applications:

- Low pressure differential monitoring for air and non-combustible gases including filters, blowers, vacuums, air handlers and clean rooms offering both local LCD and analog connection to the building automation system (BAS)

| Specifications | |
|---|---|
| **Output Signal** | Display only, 3V (2 AA batteries)<br>4…20 mA, 2-wire / Vs = 12-28 Vdc<br>0…10 Vdc, 3-wire / Vs = 12-28 Vdc<br>RS485 / Vs = 12-28 Vdc |
| **Accuracy** | ±1% Full Scale (>100 Pa/ 0.4”H2O) or ±2% Full Scale (≤100 Pa/ 0.4”H2O) |
| **Long-Term Stability** | ±0.5% Full Scale (typically per year) |
| **Overload Pressure** | 7 kPa (<2 kPa range), 5 x range (≥2 kPa range) |
| **Current Consumption** | <0.2 mA |
| **Response Time** | 1s |
| **Storage Temperature** | 0° to 40°C (-40° to 104° F) |
| **Operating Temperature** | -20° to 80° C (-4° to 176° deg F) |
| **Reverse Polarity Protection** | Yes |
| **Enclosure Rating** | IP54 |
| **Housing** | PA 66 (engineered thermoplastic) |
| **Process Connections** | 3 x 5mm (ID @ 3mm, OD @ 5mm) |
| **Acceptable Process Media** | Clean air and non-combustable gases |
| **Weight** | 250 grams (8.8 pounds) |
| **Product Certification** | CE |

# LFD Low Pressure Digital Differential Gauge With Transmitter Output

## Dimensions

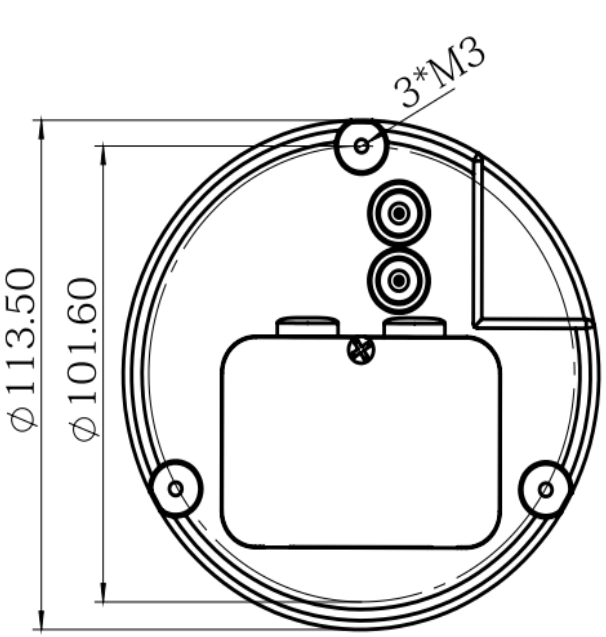


**Units: mm**

*22.70mm = 0.9”*

*35.26mm = 1.4”*

*40.79mm =1.6”*

*101.60mm = 4.0”*

*113.50mm = 4.5”*

## Engineering Codes

| LFD Engineering Codes | | L F D - | - | - | - | - | - | - |
|---|---|---|---|---|---|---|---|---|
| **OUTPUT TYPE** | LCD display only, 3V | | 0 | | | | | |
| | LCD display and 4…20 mA, 2-wire | | 1 | | | | | |
| | LCD display and 0…10 Vdc, 3-wire | | 3 | | | | | |
| | LCD display and RS485 | | R | | | | | |
| **SERIES PRESSURE RANGE (INCHES OF WATER)** | -0.12 / 0 / 0.12 "H2O | | | | 0 9 5 | | | |
| | -0.24 / 0 / 0.24 "H2O | | | | 1 0 0 | | | |
| | -0.5 / 0 / 0.5 "H2O | | | | 1 0 1 | | | |
| | -1 / 0 / 1 "H2O | | | | 1 0 2 | | | |
| | -2 / 0 / 2 "H2O | | | | 1 0 3 | | | |
| | -4 / 0 / 4 "H2O | | | | 1 0 4 | | | |
| | -10 / 0 / 10V | | | | 1 0 5 | | | |
| | -20 / 0 / 20 "H2O | | | | 1 0 7 | | | |
| **SERIES PRESSURE RANGE (PSI)** | -0.15 / 0 / 0.15 psi | | | | 1 6 1 | | | |
| | -0.36 / 0 / 0.36 psi | | | | 1 6 3 | | | |
| | -0.7 / 0 / 0.7 psi | | | | 1 6 6 | | | |
| **SERIES PRESSURE RANGE (PA)** | -30 / 0 / 30 Pa | | | | 1 9 5 | | | |
| | -60 / 0 / 60 Pa | | | | 2 0 1 | | | |
| | -125 / 0 / 125 Pa | | | | 4 0 3 | | | |
| | -250 / 0 / 250 Pa | | | | 4 0 6 | | | |
| | -500 / 0 / 500 Pa | | | | 4 0 8 | | | |
| | -1,000 / 0 / 1,000 Pa | | | | 4 1 0 | | | |
| **SERIES PRESSURE RANGE (KPA)** | -0.25 / 0 / 0.25 kPa | | | | 5 5 1 | | | |
| | -0.5 / 0 / 0.5 kPa | | | | 5 5 2 | | | |
| | -1 / 0 / 1 kPa | | | | 5 6 1 | | | |
| | -2.5 / 0 / 2.5 kPa | | | | 5 6 4 | | | |
| | -5 / 0 / 5 kPa | | | | 5 6 7 | | | |
| | Other pressure range, specify | | | | # # # | | | |
| **ACCURACY** | ±1% Full Scale (>100 Pa/ 0.4"H2O) | | | | | 1 G | | |
| | ±2% Full Scale (≤100 Pa/ 0.4"H2O) | | | | | 2 G | | |
| **PROCESS CONNECTION** | 3 x 5mm (ID @ 3mm, OD @ 5mm) | | | | | | 5 M | |
| | Other process connection, specify | | | | | | # # | |
| **SPECIAL** | PSI pressure range | | | | | | | R 1 |
| | KPA pressure range | | | | | | | R 2 |
| | INCHES OF WATER ("H2O) pressure range | | | | | | | R 8 |
| | PA pressure range | | | | | | | R 1 6 |
| | Special | | | | | | | Z # # |

# TY52 WinSMART Temperature Transmitter



## Description & Features:

- Integrated temperature transmitter with ASIC signalling transmitter
- Explosion proof smart temperature transmitter for hazardous locations
- -50 to 400°C (-58/752°F ) measure range
- 0.5% accuracy
- Simple to operate 3-push button control
- HART or Modbus communications available
- Low power option available
- Re-zero function for safe field calibration
- 5 Year Warranty

## Applications:

- TY52 can be utilized and installed anywhere where temperature measurement is required. From Oil & Gas installations to Power Generation, this product has a rugged design and is equipped with the communication protocols to meet all your day to day requirements

| Specifications | |
|---|---|
| **Output Signal** | 4/20 mA, 2-wire / V = 10.5-30 Vdc<br>4/20 mA + HART, 2-wire / V = 16.5-55 Vdc<br>1/5 Vdc, 3-wire / V = 12-30 Vdc<br>Modbus, 4-wire / V = 12-32 Vdc |
| **Sensor Type** | PT100 RTD |
| **Measuring Range** | -50/400°C (-58/752°F) |
| **LCD Display** | LCD display (standard) or without LCD display (optional) |
| **Accuracy** | 0.5% accuracy |
| **Stability** | 0.05% or 0.1°C / year |
| **Temperature Ranges** | Working: -40/85°C, -40/185°F (LCD may not be readable at temperatures below -20°C/ -4°F)<br>Storage: -40/100°C (with display -20/70°C), -40/212°F (without display -4/158°F) |
| **Working Humidity** | 0-95% |
| **Pressure Connection** | 1/2" NPTM, 1/2 GM or Flanged |
| **Housing** | Rugged die-cast aluminum housing, painted blue |
| **Wetted Parts** | 316 SS, 304 SS |
| **Power Consumption** | =500 mW @ 24 VDC, 20.8 mA (LCD); </=493mW @ 24VDC, 20.55mA (without LCD) |
| **Wake Up Time** | 6 seconds |
| **Vibration** | 4g, 2…100Hz<br>According to IEC 60068-2-6 |
| **Available Temperature Units** | Celsius (°C), Fahrenheit (°F) |
| **Protection Class** | EMI, ESD, RFI, reverse polarity protected; Surge protection IEC1000-4-5 |
| **Approval** | • Class I, Division 1, Groups A, B, C & D, T6... T1<br>• Class I, Division 2, Groups A, B, C & D, T4...T1<br>• Class II, Division 1, Groups E, F & G, T80°C... T400°C<br>• Class III |
| **Protection Class** | IP66 |

**Please Note:** Thermowell sold separately.

# TY52 WinSMART™ Temperature Transmitter

## Order Codes

| Insertion Length (INCH), 1/2" NPT per CSA | 4/20 mA Output | 4/20 mA + HART Output | 1/5 VDC Output | MODBUS RS485 Output |
|---|---|---|---|---|
| | °C/°F | | | |
| 50mm (1.97") | TY520501 | TY52050H | TY520502 | TY52050R |
| 100mm (3.94") | TY521001 | TY52100H | TY521002 | TY52100R |
| 150mm (5.91") | TY521501 | TY52150H | TY521502 | TY52150R |
| 200mm (7.87") | TY522001 | TY52200H | TY522002 | TY52200R |
| 300mm (11.81") | TY523001 | TY52300H | TY523002 | TY52300R |
| 400mm (15.75") | TY524001 | TY52400H | TY524002 | TY52400R |
| 500mm (19.69") | TY525001 | TY52500H | TY525002 | TY52500R |

See how to order guide for specific lengths  L= Insertion length

## Dimensions (mm)

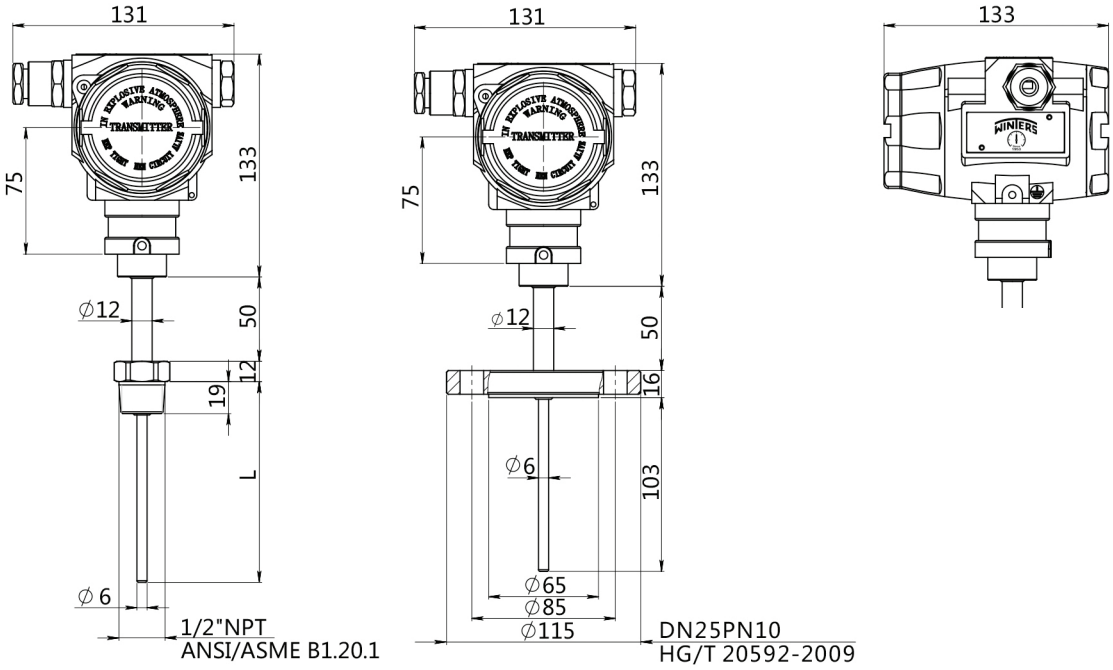


## Pin Configurations

### 4-20mA two wires (DIN43650)

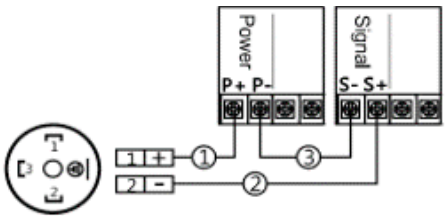


① Connect the positive power supply (P+) to the positive power supply (P+) of temperature transmitter (terminals 1);
② Connect the negative power supply (P-) of temperature transmitter (terminals 2) to the positive signal module (S+);
③ Connect the negative signal module (S-) to the negative power supply (P-)

### Three wires current/voltage signal (DIN43650)

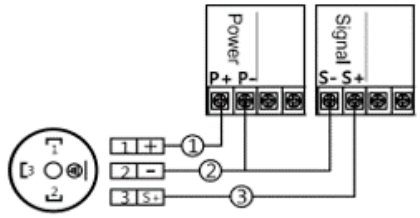


① Connect the positive power supply (P+) to the positive power supply (P+) of temperature transmitter (terminals 1);
② Connect the negative power supply (P-) of temperature transmitter (terminals 2) to the negative power supply (P-), and connect the negative signal module (S-) to negative power supply (P-);
③ Connect the positive signal module (S+) of temperature transmitter (terminals 3) to the positive signal module (S+);

## Process Connections

### H01-H02 (mm)

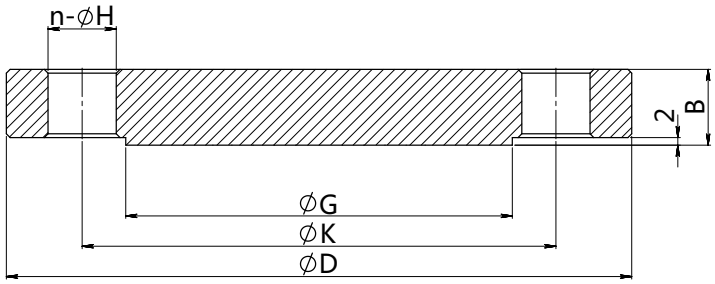


| Standard | Specification | Outer Diameter (ϕD) | Thickness (B) |
|---|---|---|---|
| HG/T20592-2009 | DN50PN10-PN40 | 165 | 20 |
| HG/T20592-2009 | DN25PN10-PN40 | 115 | 16 |
| **Hole Circle (ϕK)** | **Raised-face Diameter (ϕG)** | **Hole Diameter (ϕH)** | **Number (n)** |
| 125 | 102 | 18 | 4 |
| 85 | 68 | 14 | 4 |

### R01 (mm)

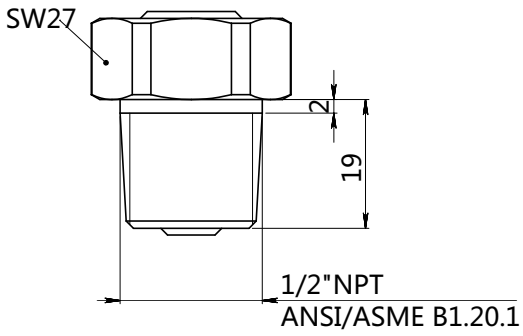


### G01 (mm)

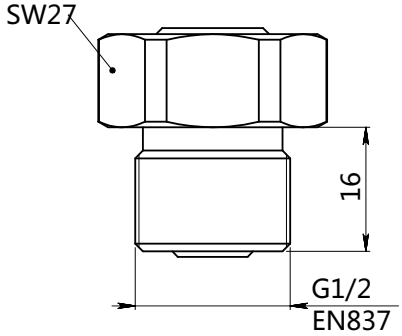


See how to order guide for specific lengths.

## Order Codes (For Thermowell)

| TY52 Series Thermowell selection, 304SS Material (Straight - Type) | | | | | | |
|---|---|---|---|---|---|---|
| TY52 Insertion Length | Threaded-Type, Instrument Connection = 1/2" NPT | | Flanged-Type, Instrument connection = 1/2" NPT | | | |
| | Process Connections -> 1/2" NPT | Process Connections -> 3/4" NPT | RF - Raised Face 150# 1.5" | 150# 2" | 300# 1.5" | 300# 2" |
| 50mm (1.97") | TY52T10N24L020 | TY52T10N34L020 | TY52T154A4L020 | TY52T154A6L020 | TY52T154A12L020 | TY52T154A14L020 |
| 100mm (3.94") | TY52T10N24L050 | TY52T10N34L050 | TY52T154A4L050 | TY52T154A6L050 | TY52T154A12L050 | TY52T154A14L050 |
| 150mm (5.91") | TY52T10N24L100 | TY52T10N34L100 | TY52T154A4L100 | TY52T154A6L100 | TY52T154A12L100 | TY52T154A14L100 |
| 200mm (7.87") | TY52T10N24L200 | TY52T10N34L200 | TY52T154A4L200 | TY52T154A6L200 | TY52T154A12L200 | TY52T154A14L200 |
| 300mm (11.81") | TY52T10N24L300 | TY52T10N34L300 | TY52T154A4L300 | TY52T154A6L300 | TY52T154A12L300 | TY52T154A14L300 |
| 400mm (15.75") | TY52T10N24L400 | TY52T10N34L400 | TY52T154A4L400 | TY52T154A6L400 | TY52T154A12L400 | TY52T154A14L400 |
| 500mm (19.69") | TY52T10N24L500 | TY52T10N34L500 | TY52T154A4L500 | TY52T154A6L500 | TY52T154A12L500 | TY52T154A14L500 |

**Note:** Inside diameter (bore) fixed at 6.6mm + Outside diameter fixed at 10mm + Tip diameter fixed at 6mm (threaded) L= Insertion length includes instrument connection

| TY52 Series Thermowell selection, 316SS Material (Straight - Type) | | | | | | |
|---|---|---|---|---|---|---|
| TY52 Insertion Length | Threaded-Type, Instrument Connection = 1/2" NPT | | Flanged-Type, Instrument connection = 1/2" NPT | | | |
| | Process Connections -> 1/2" NPT | Process Connections -> 3/4" NPT | RF - Raised Face 150# 1.5" | 150# 2" | 300# 1.5" | 300# 2" |
| 50mm (1.97") | TY52T10N26L020 | TY52T10N36L020 | TY52T156A4L020 | TY52T156A6L020 | TY52T156A12L020 | TY52T156A14L020 |
| 100mm (3.94") | TY52T10N26L050 | TY52T10N36L050 | TY52T156A4L050 | TY52T156A6L050 | TY52T156A12L050 | TY52T156A14L050 |
| 150mm (5.91") | TY52T10N26L100 | TY52T10N36L100 | TY52T156A4L100 | TY52T156A6L100 | TY52T156A12L100 | TY52T156A14L100 |
| 200mm (7.87") | TY52T10N260200 | TY52T10N360200 | TY52T156A4L200 | TY52T156A6L200 | TY52T156A12L200 | TY52T156A14L200 |
| 300mm (11.81") | TY52T10N26L300 | TY52T10N36L300 | TY52T156A4L300 | TY52T156A6L300 | TY52T156A12L300 | TY52T156A14L300 |
| 400mm (15.75") | TY52T10N26L400 | TY52T10N36L400 | TY52T156A4L400 | TY52T156A6L400 | TY52T156A12L400 | TY52T156A14L400 |
| 500mm (19.69") | TY52T10N26L500 | TY52T10N36L500 | TY52T156A4L500 | TY52T156A6L500 | TY52T156A12L500 | TY52T156A14L500 |

**Note:** Inside diameter (bore) fixed at 6.6mm + Outside diameter fixed at 10mm + Tip diameter fixed at 6.4mm (flanged) L= Insertion length includes instrument connection

# TY52 WinSMART™ Temperature Transmitter

## Engineering Codes

| TY52 ENGINEERED PART NUMBERS | | T Y 5 2 - | | - | | - | | - | | - | | - | | - |
|---|---|---|---|---|---|---|---|---|---|---|---|---|---|---|
| **OUTPUT** | 4…20 mA / 2-wire | | 1 | | | | | | | | | | | |
| | 4…20 mA / 2-wire + HART | | H | | | | | | | | | | | |
| | 1…5 V, 3-wire | | 2 | | | | | | | | | | | |
| | MODBUS RS485, 2-wire | | R | | | | | | | | | | | |
| **SENSOR & ACCURACY** | PT100, 0.5 % (standard) | | | 2 | | | | | | | | | | |
| **ELECTRICAL CONNECTION** | Water proof M20x1.5 F, PVC, IP66 | | | | C 1 | | | | | | | | | |
| | Flame proof 1/2" NPT F, SS, IP66 (standard) | | | | C 2 | | | | | | | | | |
| | Flame proof M20x1.5 F, SS, IP66 | | | | C 3 | | | | | | | | | |
| **EXTENSION TUBE** | No Extension (standard) | | | | | E 1 | | | | | | | | |
| | 50mm length, 12mm diameter, 316SS | | | | | E 2 | | | | | | | | |
| | 100mm length, 12mm diameter, 316SS | | | | | E 3 | | | | | | | | |
| | 150mm length, 12mm diameter, 316SS | | | | | E 4 | | | | | | | | |
| | 200mm length, 12mm diameter, 316SS | | | | | E 5 | | | | | | | | |
| | Other, specify E6 thru E9 | | | | | E Z | | | | | | | | |
| **PROCESS CONNECTION** | 1/2" NPT (M) (standard) | | | | | | N 2 | | | | | | | |
| | G 1/2 (M) | | | | | | G 2 | | | | | | | |
| | Flange DN 25 | | | | | | F 2 | | | | | | | |
| | Flange DN 50 | | | | | | F 5 | | | | | | | |
| **PROCESS CONNECTION MATERIAL** | 304 SS (standard) | | | | | | | 4 | | | | | | |
| | 316 SS | | | | | | | 6 | | | | | | |
| **OUTSIDE DIAMETER** | 6mm (1/4"), material same as process connection (standard) | | | | | | | | D 1 | | | | | |
| | 8mm, material same as process connection | | | | | | | | D 2 | | | | | |
| | 10mm, material same as process connection | | | | | | | | D 3 | | | | | |
| | 12mm, material same as process connection | | | | | | | | D 4 | | | | | |
| | 16mm, material same as process connection | | | | | | | | D 5 | | | | | |
| | Other, specify D6 thru DZ | | | | | | | | D Z | | | | | |
| **Insertion Length, in MM** | 50 (2") | | | | | | | | | L 0 0 5 0 | | | | |
| | 100 (4") | | | | | | | | | L 0 1 0 0 | | | | |
| | 150 (6") | | | | | | | | | L 0 1 5 0 | | | | |
| | 200 (8") | | | | | | | | | L 0 2 0 0 | | | | |
| | 300 (12") | | | | | | | | | L 0 3 0 0 | | | | |
| | 400 (16") | | | | | | | | | L 0 4 0 0 | | | | |
| | 500 (18") | | | | | | | | | L 0 5 0 0 | | | | |
| | Special (1m/39.4" max) | | | | | | | | | L Z Z Z Z | | | | |
| **SPECIAL** | Without LCD display | | | | | | | | | | W D | | | |
| | Moveable process connection | | | | | | | | | | M C | | | |
| | Other, specify Z1 thru Z99 | | | | | | | | | | Z # # | | | |

## Thermowell

**Series Number (how to order):**

| | | |
|---|---|---|
| SERIES | | TY52 |
| THERMOWELL TYPE | Threaded | T10 |
| | Flanged | T15 |
| | Other, Specify | XXX |
| MATERIAL OF CONSTRUCTION | 304SS | 4 |
| | 316SS | 6 |
| | Other, Specify | XX |
| INSTRUMENT CONNECTION | 1/2" NPT (F) | F2 |
| | M20 x 1.5 (F) | M2 |
| | Other, Specify | XX |
| PROCESS CONNECTION (THREADED) | 1/2" NPT (M) | N2 |
| | 3/4" NPT (M) | N3 |
| | M20 x 1.5 (M) | G2 |
| | Other, Specify | XX |
| PROCESS CONNECTION (FLANGED, RF) | 150# 1.0" | A02 |
| | 150# 1.5" | A04 |
| | 150# 2.0" | A06 |
| | 150# 3.0" | A08 |
| | 300# 1.0" | A10 |
| | 300# 1.5" | A12 |
| | 300# 2.0" | A14 |
| | 300# 3.0" | A16 |
| | 600# 1.0" | A18 |
| | 600# 1.5" | A20 |
| | 600# 2.0" | A22 |
| | 600# 3.0" | A24 |
| | DN25 | D25 |
| | DN40 | D40 |
| | DN50 | D50 |
| | DN80 | D80 |
| | | XXX |
| OUTSIDE DIAMETER (MM) | 8mm | 8 |
| | 10mm | 10 |
| | 12mm | 12 |
| | 16mm | 16 |
| | 18mm | 18 |
| | Other, Specify | XXX |
| INSERTION LENGTH (MM) | 100mm (4") | L050 |
| | 150mm (6") | L100 |
| | 200mm (8") | L200 |
| | 300mm (12") | L300 |
| | 400mm (16") | L400 |
| | 500mm (18") | L500 |
| | Other, Specify (mm) | L |
| SPECIAL | Customer Defined | Z### |

Note: Inside diameter (bore) fixed at 6.6mm
Threaded type -> Tip diameter fixed at 6mm
Flanged type -> Tip diameter fixed at 6.4mm

# TER | Industrial RTD

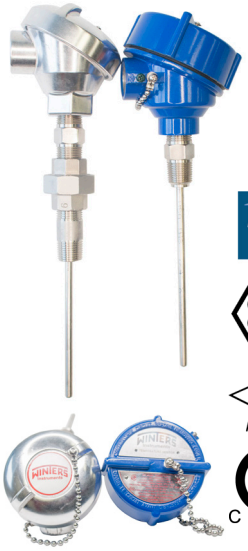



## Description & Features:

- RTD assemblies for accurate industrial and process temperature measurements
- 100 Ω and 120 Ω RTD type sensors available, offering wide temperature ranges
- Color coded single, 3-wire elements for simplified installations
- General purpose and Explosion proof enclosures availbale; in aluminum, cast iron and stainless steel
- Spring loaded, nipple-union-union and welded constructions available
- Simplified terminations with ceramic terminal blocks or analog & networking transmitters available
- All thermocouple assemblies may be selected and engineered with thermowells
- 5 year warranty

## Applications:

- Used in standard industrial or plant environments including mixing tanks, reactors and turbines
- Designed for hazardous (classified) locations, such as compressor stations, flare stacks, dryers and chemical processes

| Specifications | |
|---|---|
| **Sensing Element** | RTD - PT100 |
| **Termination or Output Signal** | Flying leads, ceramic terminal block, analog & networking transmitter outputs available |
| **Accuracy** | Class A @ ±0.15°C at 0°C/32°F or Class AA @ ±0.10°C at 0°C/32°F |
| **Temperature Range** | 3-wire 100 Ω RTD @ -50 to 288°C / -58 to 550°F<br>3-wire 120 Ω RTD @ -50 to 250°C / -58 to 282°F |
| **Sheath Material and Diameter** | 316SS in 1/8" or 1/4" or 6mm |
| **Extension Material** | Stainless Steel |
| **Process Connection** | 1/2" NPT male fitting or nipple-union-nipple, welded or spring loaded |
| **Conduit Connection** | 3/4" NPT female |
| **Enclosure Rating** | NEMA4 or IP66 - aluminum, cast iron and stainless steel - General purpose or Explosion proof |
| **Approvals** | Transmtter - isolated 4/20mA + HART, Instrisically Safe<br>Enclosure - FM, CSA, ATEX & IECex |

## Description and Drawings

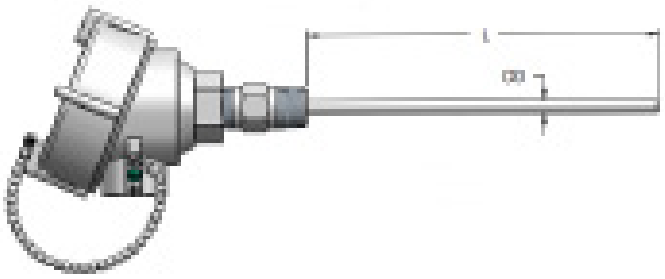


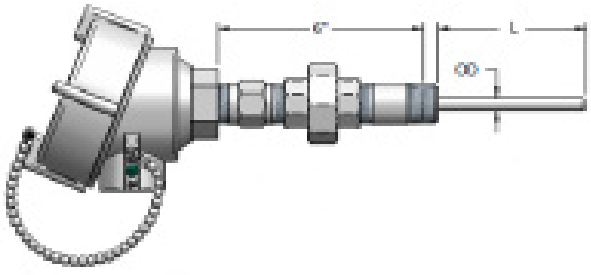


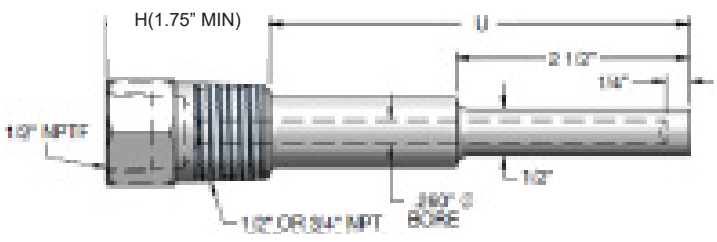


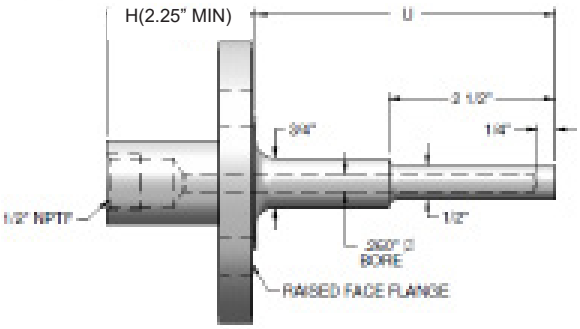

## Wiring Diagram

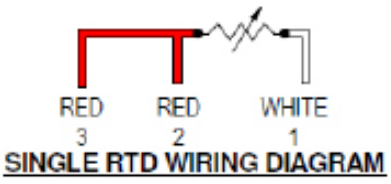

SINGLE RTD WIRING DIAGRAM

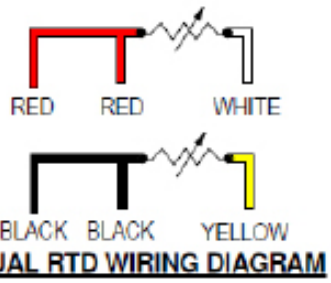

DUAL RTD WIRING DIAGRAM

## Order Codes

| TER SERIES | | TER-□□□-□-□-□-□-□□-□□-□□□□-□□□-□-□□-□-□□ |
|---|---|---|
| **SENSOR TYPE (RTD)** | PT100 3-WIRE RTD, CLASS A @ -50 to 288°C / -58 to 550°F | R 3 |
| | PT100 3-WIRE RTD, CLASS AA @ -50 to 288°C / -58 to 550°F | R 3 P |
| | 120 Ω 3-WIRE, NICKEL @ -50 to 250°C / -58 to 282°F | R 3 N |
| | OTHER, SPECIFY | R X |
| **ELEMENT CONSTRUCTION** | SINGLE | 1 |
| | DUAL | 2 |
| | OTHER, SPECIFY | X |
| **TUBE DIAMETER** | 1/4" | B |
| | 1/8" | D |
| | 6MM | R |
| | OTHER, SPECIFY | X |
| **ATTACHING DEVICE** | SPRING LOADED (STANDARD) | S |
| *(1/2" NPT HEX MALE CONNECTION)* | WELDED | W |
| | SPRING LOADED W/ 6" NIPPLE-UNION-NIPPLE | N |
| | OTHER, SPECIFY | X |
| **ENCLOSURE** | GENERAL PURPOSE ALUMINUM | M |
| | GENERAL PUSPOSE CAST IRON | N |
| | EXPLOSION PROOF 316SS (FM,CSA,ATEX,IECEX) | J |
| | EXPLOSION PROOF ALUMINUM (FM,CSA,ATEX,IECEX) | P |
| | BAR ENDS / FLYING LEADS | A |
| | CERAMIC TERMINAL BLOCK | O |
| | OTHER, SPECIFY | X |
| **TERMINATION OR TRANSMITTER** | CERAMIC TERMINAL BLOCK | Z |
| | ISOLATED 4/20MA TRANSMITTER | 8 H |
| | ISOLATED 4/20MA + HART TRANSMITTER, INTRISICALLY SAFE | 8 D |
| | ISOLATED 4/20MA + HART TRANSMITTER | 8 I |
| | OTHER, SPECIFY | X |
| **THERMOWELL TYPE** | FLANGED TAPERED | F T |
| | FLANGED STEPPED | F A |
| | THREADED TAPERED | T T |
| | THREADED STEPPED | T A |
| | OTHER, SPECIFY | X |
| | NO THERMOWELL | Z |
| **THERMOWELL/INSERTION LENGTH (U/L)** | U LENGTH (IN INCHES) | U - - - |
| | SPRING LOADED -> Sensor Length (L) = Overall Length (OAL) - 0.25" | |
| | WELDED -> Sensor Length (L) = Overall Length (OAL) - 1" | |
| | NO CONNECTION -> Sensor Length (L) = Overall Length (OAL) + 2" | |
| **HEAD LENGTH (H)** | H LENGTH (IN INCHES) | H - - |
| | MINIMUM H FOR THREADED = 1.75" | |
| | MINIMUM H FOR FLANGED = 2.25" | |
| **THERMOWELL AND FLANGE MATERIAL** | 304SS | H |
| | 316SS | K |
| | OTHER, SPECIFY | X |
| | NO THERMOWELL | Z |
| **SIZE OF PROCESS THREAD OR FLANGE** | 1/2" NPT | N 1 |
| | 3/4" NPT | N 2 |
| | 1" FLANGE | F 3 |
| | 1 1/2" FLANGE | F 4 |
| | 2" FLANGE | F 5 |
| | 3" FLANGE | F 6 |
| | OTHER, SPECIFY | X |
| | NO THERMOWELL | Z |
| **PRESSURE RATING OF FLANGE** | 150# | A |
| | 300# | B |
| | 600# | D |
| | OTHER, SPECIFY | X |
| | NO FLANGE | Z |
| **OPTIONS, LIST IN ALPHA-NUMERIC ORDER** | STAINLESS STEEL TAG | 1 |
| | PLASTIC TAG | 2 |
| | PAPER TAG | 3 |
| | CALIBRATION CERTIFICATE | 5 |
| | MTR (THERMOWELL ONLY) | M |
| | OTHER, SPECIFY | X |

# TET Industrial Thermocouple





## Description & Features:

- Thermocouple assemblies for accurate industrial and process temperature measurements
- Types K, J, E, T & N thermocouple sensors available, offering wide temperature ranges
- Color coded single and dual wire elements for simplified installations
- General purpose and Explosion proof enclosures available; in aluminum, cast iron and stainless steel
- Spring loaded, nipple-union-union and welded constructions available
- Simplified terminations with ceramic terminal blocks or analog & networking transmitters available
- All thermocouple assemblies may be selected and engineered with thermowells
- 5 year warranty

## Applications:

- Used in standard industrial or plant environments including ovens, boilers and test chambers
- Designed for hazardous (classified) locations, such as wellheads, pipelines, reactors, mixing vessels and tanks

| Specifications | |
|---|---|
| **Sensing Element** | Thermocouple - type K, J, E, T and N. Others available upon request |
| **Termination or Output Signal** | Flying leads, ceramic terminal block, analog & networking transmitter outputs available |
| **Accuracy** | Class 1 or ±1.5 °C / 2.7 °F |
| **Temperature Range** | Type J @ 0 to 650°C / 32 to 1,202°F<br>Type K @ 0 to 870°C / 32 to 1,598°F<br>Type N @ 0 to 870°C / 32 to 1,598°F<br>Type T @ 0 to 370°C / 32 to 698°F<br>Type E @ 0 to 650°C / 32 to 1,202°F |
| **Sheath Material and Diameter** | 316SS in 1/8” or 1/4” or 6mm |
| **Extension Material** | Stainless Steel |
| **Process Connection** | 1/2” NPT male fitting or nipple-union-nipple, welded or spring loaded |
| **Conduit Connection** | 3/4” NPT female |
| **Enclosure Rating** | IP65 to IP66 - aluminum, cast iron and stainless steel - General purpose or Explosion proof |
| **Approvals** | Transmtter - isolated 4/20mA + HART, Instrisically Safe<br>Enclosure - FM, CSA, ATEX & IECex |

## Description and Drawings

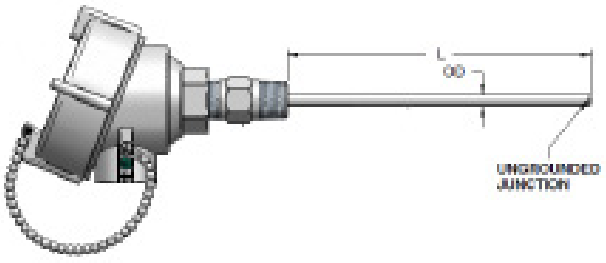


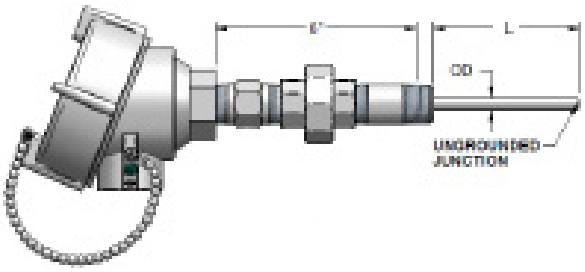


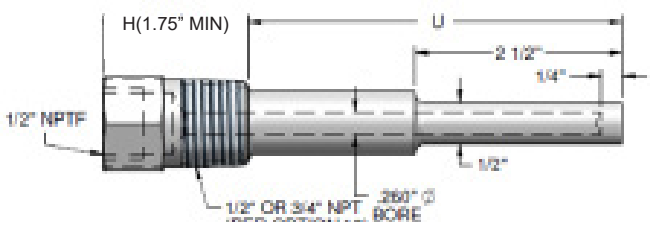


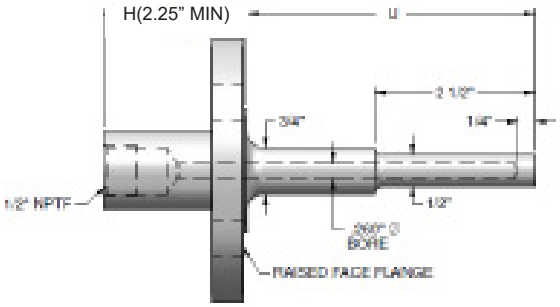

# TET Industrial Thermocouple

## Wiring Diagram

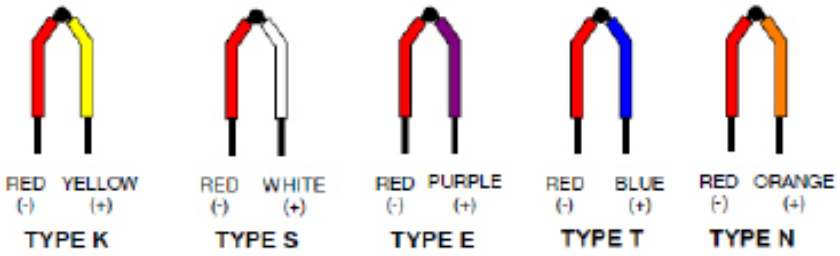


## Order Codes

| TET SERIES | | TET- |
|---|---|---|
| **SENSOR TYPE (THERMOCOUPLE)** | Type K @ 0 to 870°C / 32 to 1,598°F | TK |
| | Type J @ 0 to 650°C / 32 to 1,202°F | TJ |
| | Type E @ 0 to 650°C / 32 to 1,202°F | TE |
| | Type T @ 0 to 370°C / 32 to 698°F | TT |
| | Type N @ 0 to 870°C / 32 to 1,598°F | TN |
| | OTHER, SPECIFY | TX |
| **ELEMENT CONSTRUCTION** | SINGLE | 1 |
| | DUAL | 2 |
| | OTHER, SPECIFY | X |
| **TUBE DIAMETER** | 1/4" | B |
| | 1/8" | D |
| | 6MM | R |
| | OTHER, SPECIFY | X |
| **ATTACHING DEVICE** | SPRING LOADED (STANDARD) | S |
| *(1/2" NPT HEX MALE CONNECTION)* | WELDED | W |
| | SPRING LOADED W/ 6" NIPPLE-UNION-NIPPLE | N |
| | OTHER, SPECIFY | X |
| **ENCLOSURE** | GENERAL PURPOSE ALUMINUM | M |
| | GENERAL PUSPOSE CAST IRON | N |
| | EXPLOSION PROOF 316SS (FM,CSA,ATEX,IECEX) | J |
| | EXPLOSION PROOF ALUMINUM (FM,CSA,ATEX,IECEX) | P |
| | BAR ENDS / FLYING LEADS | A |
| | CERAMIC TERMINAL BLOCK | O |
| | OTHER, SPECIFY | X |
| **TERMINATION OR TRANSMITTER** | CERAMIC TERMINAL BLOCK | Z |
| | ISOLATED 4/20MA TRANSMITTER | 8H |
| | ISOLATED 4/20MA + HART TRANSMITTER, INTRISICALLY SAFE | 8D |
| | ISOLATED 4/20MA + HART TRANSMITTER | 8I |
| | OTHER, SPECIFY | X |
| **THERMOWELL TYPE** | FLANGED TAPERED | FT |
| | FLANGED STEPPED | FA |
| | THREADED TAPERED | TT |
| | THREADED STEPPED | TA |
| | OTHER, SPECIFY | X |
| | NO THERMOWELL | Z |
| **THERMOWELL/INSERTION LENGTH (U/L)** | U LENGTH (IN INCHES) | U- - - |
| | SPRING LOADED -> Sensor Length (L) = Overall Length (OAL) - 0.25" | |
| | WELDED -> Sensor Length (L) = Overall Length (OAL) - 1" | |
| | NO CONNECTION -> Sensor Length (L) = Overall Length (OAL) + 2" | |
| **HEAD LENGTH (H)** | H LENGTH (IN INCHES) | H- - |
| | MINIMUM H FOR THREADED = 1.75" | |
| | MINIMUM H FOR FLANGED = 2.25" | |
| **THERMOWELL AND FLANGE MATERIAL** | 304SS | H |
| | 316SS | K |
| | OTHER, SPECIFY | X |
| | NO THERMOWELL | Z |
| **SIZE OF PROCESS THREAD OR FLANGE** | 1/2" NPT | N1 |
| | 3/4" NPT | N2 |
| | 1" FLANGE | F3 |
| | 1 1/2" FLANGE | F4 |
| | 2" FLANGE | F5 |
| | 3" FLANGE | F6 |
| | OTHER, SPECIFY | X |
| | NO THERMOWELL | Z |
| **PRESSURE RATING OF FLANGE** | 150# | A |
| | 300# | B |
| | 600# | D |
| | OTHER, SPECIFY | X |
| | NO FLANGE | Z |
| **OPTIONS, LIST IN ALPHA-NUMERIC ORDER** | STAINLESS STEEL TAG | 1 |
| | PLASTIC TAG | 2 |
| | PAPER TAG | 3 |
| | CALIBRATION CERTIFICATE | 5 |
| | MTR (THERMOWELL ONLY) | M |
| | OTHER, SPECIFY | X |

# WINTRONIQ



# WT1/ WR1 Indoor Temperature Sensors With Transmitter Output



## Description & Features:

- The WT1 and WR1 series are indoor temperature sensors with built-in transmitter outputs
- These products offer multiple power supply options and analog or digital output signals to choose from
- Designed and manufactured with high-precision fast responding sensors with strong long-term stability
- They provide multiple measurement and output modes and are suitable for a variety of HVAC control systems
- Optional high-definition LCD display is available
- Complete protection against overvoltage, reverse polarity and EMC interference
- Compact sizing with asthetically pleasing design and very easy to install
- Customization available for dedicated installations and private labelling
- 5-year warranty

## Applications:

- The products are widely used in HVAC control systems of various types in commercial and government buildings as well as manufacturing and processing facilities
- Suitable for indoor temperature measurement, such as clean rooms, laboratories, hospitals, datacentres, schools, and many more application areas

| Technical Parameters | |
|---|---|
| **Measuring range** | 0/50°C & 32/122°F, -20/80°C & -4/176°F |
| **Measurement accuracy** | 0.2°C(@25°F) |
| **Transmission accuracy** | 0.1°C (full scale) |
| **Output signal** | 4/20mA, 0/10V, 0/5V or RS485 |
| **Response time:** | T90 ≤ 10 s |
| **Working power supply** | 24Vac/Vdc, 24Vdc (two-wire system) or 12Vdc |
| **Working environment** | -25/70°C or -13/158°F & 0-95% RH, No condensation |
| **Storage Environment** | -40/70°C or -40/158°F & 0-95% RH, No condensation |
| **Display type** | LCD @ -10/60°C or 14/140°F - Note: To be installed in non-condensing environments |
| **Casing material** | ABS + PC |
| **Protection level** | IP30 |
| **Fire rating** | V-0, refer to UL94 listing |
| **Product certification:** | CE, ROHS |

# WT1/ WR1 Indoor Temperature Sensors With Transmitter Output

## Dimensions (mm)

### B Type (available with LCD option)



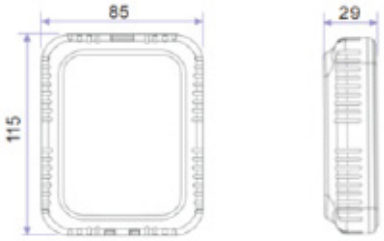


28mm = 1.1”
29mm = 1.1”
60mm = 2.4”
85mm = 3.3”
105mm = 41”
115mm = 4.5”

### C Type (not available with LCD)






## Selection Table

**WT1 - Indoor Temperature Transmitter engineering order codes**

| Description | Technical parameters | | | | | | |
|---|---|---|---|---|---|---|---|
| Power supply | 24 Vdc | 1 | | | | | |
| | 12 Vdc | 3 | | | | | |
| | 24 Vac/Vdc | 4 | | | | | |
| Output signal | 4/20 mA | | 1 | | | | |
| | 0/10 V | | 3 | | | | |
| | 0/5 V | | 6 | | | | |
| | RS485 (B shell only) | | R | | | | |
| Temperature range *(PT1000)* | 0/50℃ & 32/122°F | | | 1 | | | |
| | -20/80℃ & -4/176°F | | | 3 | | | |
| | Other range | | | # | | | |
| Housing Type | B-type, contoured edging | | | | B1 | | |
| | C-type, classic design | | | | C1 | | |
| LCD | Without LCD display | | | | | - | |
| | LCD display, °C (only available for Housing B-Type) | | | | | SC | |
| | LCD display, °C/°F (only available for Housing B-Type) | | | | | DS | |
| Customization | Special ranges, labelling etc | | | | | | Z### |

**WR1 - Indoor Temperature Sensor Transmitter enginering Order Codes**

| Description | Technical parameters | | | | | |
|---|---|---|---|---|---|---|
| Power supply | 24 Vdc | 1 | | | | |
| | 12 Vdc | 3 | | | | |
| | 24 Vac/Vdc | 4 | | | | |
| Output signal | 4/20 mA | | 1 | | | |
| | 0/10 V | | 2 | | | |
| | 0/5 V | | 3 | | | |
| | RS485 | | R | | | |
| Temperature sensing *(-40/80℃/ -40/176°F)* | Pt1000 - 1,000 Ω @ 0℃; Accuracy ±0.2℃ @ 25℃ | | | 1 | | |
| | Pt100 - 100 Ω @ 0℃; Accuracy ±0.2℃ @ 25℃ | | | 2 | | |
| | NTC10K - 10K Ω @ 25℃; Accuracy ±0.4℃ @ 25℃ | | | 4 | | |
| | NTC20K - 20K Ω @ 25℃; Accuracy ±0.4℃ @ 25℃ | | | 5 | | |
| | Other types | | | # | | |
| Housing Type | B-type, contoured edging | | | | B1 | |
| | C-type, classic design | | | | C1 | |
| Customization | Special ranges, labelling etc | | | | | Z### |

**Note: When powered by 24Vdc (12Vdc) and 4/20mA out , this product supports both two-wire and three-wire wiring.**

# WT2/ WR2 Ventilation Temperature Sensors With Transmitter Output





*Thermowells sold separately

## Description & Features:

- The WT2 and WR2 series are indoor duct-type ventillation temperature sensors and transmitters with high-precision digital chips
- These products offer multiple power supply options and analog or digital output signals and a LCD display
- Designed and manufactured with high-precision fast responding Class A RTD or NTC sensors with strong long-term stability
- They are available with a wide temperature ranges with multiple measurement and output modes and are suitable for a variety of HVAC control systems
- IP65 high protection grade housing
- Complete protection against overvoltage, reverse polarity and EMC interference
- Customization available for dedicated installations and private labelling
- 5 year warranty

## Applications:

- These products are widely installed in duct and ventillation chambers for the measurement of temperature
- They are installed in conjunction with HVAC control systems to control fresh air supply and return air systems
- May also be installed in water pipes in building control systems for temperature measurement
- They are found in commerial and institutional buildings including datacentres, laboratories, airports, manufacturing centres and many other other intelligent buildings

| Technical Parameters | |
|---|---|
| **Measuring range** | 0/50°C & 32/122°F, 0/100°C & 32/212°F, -20/80°C & -4/176°F, -40/60°C & -40/140°F, -50/50°C & -58/122°F |
| **Measurement accuracy** | ±0.2°C @25°C, ±0.5°C of full scale |
| **Transmission accuracy** | ±0.1°C (full scale) |
| **Output signal** | 4/20mA, 0/10V, 0/5V or RS485 |
| **Stem Material** | 304 SS |
| **Stem Length** | 100mm (3.9"), 150mm (5.9"), 200mm (7.9"), 300mm (11.8") and others available |
| **Stem Diameter** | 6.5mm (0.26") |
| **Response Time** | T90 ≤ 10 s |
| **Working Power Supply** | 24Vac/Vdc or 24Vdc |
| **Working Environment** | -25/70°C or -13/158°F & 0-95% RH, No condensation |
| **Storage Environment** | -40/70°C or -40/158°F & 0-95% RH, No condensation |
| **Display Type** | LCD @ -10/60°C or 14/140°F - Note: To be installed in non-condensing environments |
| **Casing Material** | ABS + PC |
| **Protection Level** | IP65 |
| **Fire Rating** | V-0, refer to UL94 listing |
| **Product Certification** | CE, ROHS |

## Housing Types

**D-type**



*Side Latch

**D-type with LCD**



**E-type**



*Bottom Latch



**Thermowells sold separately along with thread protection**

# WT2/ WR2 Ventilation Temperature Sensors With Transmitter Output

## Dimensions (mm)

### D-type (Side Latch)



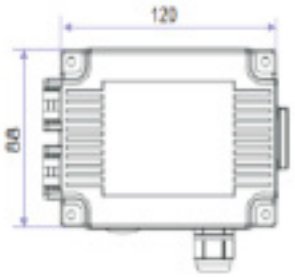


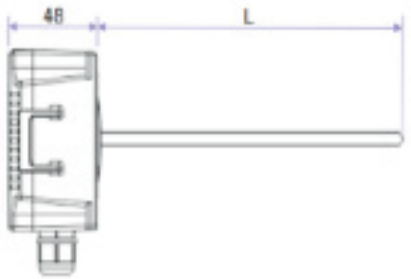


48mm = 1.9”
88mm = 3.5”
120mm = 4.7”

### E-type (Bottom Latch)



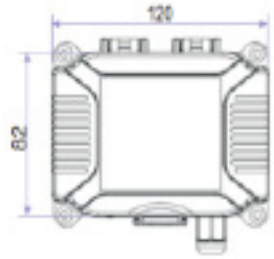


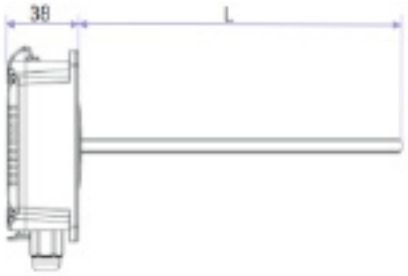


38mm = 1.5”
82mm = 3.2”
120mm = 4.7”

## Selection Table

**WT2 - Ventillation Temperature Transmitter engineering order codes**

| Description | Technical parameters | | | | | | | |
|---|---|---|---|---|---|---|---|---|
| Power supply | 24 Vdc | 1 | | | | | | |
| | 24 Vac/Vdc | 4 | | | | | | |
| Output signal | 4/20 mA | | 1 | | | | | |
| | 0/10 V | | 3 | | | | | |
| | 0/5 V | | 6 | | | | | |
| | RS485 | | R | | | | | |
| Temperature range | 0/50℃ & 32/122°F | | | 1 | | | | |
| | 0/100℃ & 32/212°F | | | 2 | | | | |
| | -20/80℃ & -4/176°F | | | 3 | | | | |
| | -40/60℃ & -40/140°F | | | 4 | | | | |
| | -50/50℃ & -58/122°F | | | 5 | | | | |
| | Other range | | | # | | | | |
| Housing Type | D-type | | | | D1 | | | |
| | E-type | | | | E1 | | | |
| LCD | Without LCD display | | | | | - | | |
| | LCD display, °C | | | | | SC | | |
| | LCD display, °C/°F | | | | | DS | | |
| Stem length | 100mm (3.9") | | | | | | L1 | |
| | 150mm (5.9") | | | | | | L2 | |
| | 200mm (7.9") | | | | | | L3 | |
| | 300mm (11.8") | | | | | | L4 | |
| | Other, specify mm | | | | | | L# | |
| Customization | Special ranges, labelling etc | | | | | | | Z### |

**WR2 - Ventillation Temperature Sensor engineering order codes**

| Description | Technical parameters | | | | | | | |
|---|---|---|---|---|---|---|---|---|
| Power supply | 24 Vdc | 1 | | | | | | |
| | 24 Vac/Vdc | 4 | | | | | | |
| Output signal | 4/20 mA | | 1 | | | | | |
| | 0/10 V | | 3 | | | | | |
| | 0/5 V | | 6 | | | | | |
| | RS485 | | R | | | | | |
| Temperature sensing | Pt1000 | | | 1 | | | | |
| | Pt100 | | | 2 | | | | |
| | NTC10K | | | 4 | | | | |
| | NTC20K | | | 5 | | | | |
| | Other types | | | # | | | | |
| Housing Type | D-type | | | | D1 | | | |
| | E-type | | | | E1 | | | |
| LCD | Without LCD display | | | | | - | | |
| | LCD display, °C | | | | | SC | | |
| | LCD display, °C/°F | | | | | DS | | |
| Stem length | 100mm (3.9") | | | | | | L1 | |
| | 150mm (5.9") | | | | | | L2 | |
| | 200mm (7.9") | | | | | | L3 | |
| | 300mm (11.8") | | | | | | L4 | |
| | Other, specify mm | | | | | | L# | |
| Customization | Special ranges, labelling etc | | | | | | | Z### |

**Note: When powered by 24Vdc (12Vdc) and 4/20mA out , this product supports both two-wire and three-wire wiring.**

# WT5/ WR5 Outdoor Temperature Sensors With Transmitter Output





## Description & Features:

- The WR5 and WT5 series are outdoor temperature sensors with high-precision digital chips and built-in transmitter outputs
- Their high IP65 rating ensures complete protection against outdoor installations as well as indoor installations in dusty and wet environments
- These products offer multiple power supply options and analog or digital output signals and an optional LCD display
- The product uses high-precision Class A RTD or NTC sensing element for long-term stability
- They are available with a wide temperature ranges with multiple measurement and output modes and are suitable for a variety of HVAC control systems
- Complete protection against overvoltage, reverse polarity and EMC interference
- Customization available for dedicated installations and private labelling
- 5 year warranty

## Applications:

- These products are installed in outdoor environments or in various harsh conditions for measurement of temperature
- They are installed in conjunction with HVAC control systems in many outside locations of buildings and manufacturing or process facilities

| Technical Parameters | |
|---|---|
| Measuring range | 0/50°C & 32/122°F, 0/100°C & 32/212°F, -20/80°C & -4/176°F, -40/60°C & -40/140°F |
| Measurement accuracy | ±0.2°C @25°C, ±0.5°C of full scale |
| Transmission accuracy | ±0.1°C (full scale) |
| Output signal | 4/20mA, 0/10V, 0/5V or RS485 |
| Response time | T90 ≤ 10 s |
| Working power supply | 24Vac/Vdc or 24Vdc |
| Working environment | -25/70°C or -13/158°F & 0-95% RH, No condensation |
| Storage Environment | -40/70°C or -40/158°F & 0-95% RH, No condensation |
| Display type | LCD @ -10/60°C or 14/140°F - Note: To be installed in non-condensing environments |
| Casing material | ABS + PC |
| Protection level | IP65 |
| Fire rating | V-0, refer to UL94 listing |
| Product certification | CE |

## Dimensions (mm)








8mm = 1.5”
82mm = 3.2”
120mm = 4.7”

# Outdoor Temperature Sensors With Transmitter Output



## Selection Table

### WT5 - Outdoor Temperature Transmitter engineering order codes

| Description | Technical parameters | | | | | |
|---|---|---|---|---|---|---|
| Power supply | 24 Vdc | 1 | | | | |
| | 24 Vac/Vdc | 4 | | | | |
| Output signal | 4/20 mA | | 1 | | | |
| | 0/10 V | | 3 | | | |
| | 0/5 V | | 6 | | | |
| | RS485 | | R | | | |
| Temperature range | 0/50℃ & 32/122°F | | | 1 | | |
| | 0/100℃ & 32/212°F | | | 2 | | |
| | -20/80℃ & -4/176°F | | | 3 | | |
| | -40/60℃ * -40/140°F | | | 4 | | |
| | Other range | | | # | | |
| LCD | Without LCD display | | | | - | |
| | LCD display, °C | | | | SC | |
| | LCD display, °C/°F | | | | DS | |
| Customization | Special ranges, labelling etc | | | | | Z### |

### WR5 - Outdoor Temperature Sensor

| Description | Technical parameters | | | | | |
|---|---|---|---|---|---|---|
| Power supply | 24 Vdc | 1 | | | | |
| | 24 Vac/Vdc | 4 | | | | |
| Output signal | 4/20 mA | | 1 | | | |
| | 0/10 V | | 3 | | | |
| | 0/5 V | | 6 | | | |
| | RS485 | | R | | | |
| Temperature sensing | Pt1000 | | | 1 | | |
| | Pt100 | | | 2 | | |
| | NTC10K | | | 4 | | |
| | NTC20K | | | 5 | | |
| | Other types | | | # | | |
| LCD | Without LCD display | | | | - | |
| | LCD display, °C | | | | SC | |
| | LCD display, °C/°F | | | | DS | |
| Customization | Special ranges, labelling etc | | | | | Z### |

**Note: A protective cover should be installed to safeguard against direct sunlight, rain/snow and severe wind storms.**

# WRH1/ WTH1 Indoor Temperature And Humidity Sensors and Transmitters




A Type




B Type

## Description & Features:

- The WRH1 and WTH1 series are indoor temperature and humidity sensors with built-in transmitter outputs
- These products offer multiple power supply options and analogue or digital output signals to choose from
- Designed & manufactured with high-precision fast responding sensors with strong long-term stability
- They provide multiple measurement and output modes and are suitable for a variety of HVAC control systems
- Higher IP housing rating and an optional high-definition LCD display
- Complete protection against overvoltage, reverse polarity and EMC interference
- Compact sizing with asthetically pleasing design and very easy to install
- 5 year warranty

## Applications:

- The products are widely used in HVAC control systems of various types in commercial and government buildings as well as manufacturing and processing facilities
- Suitable for indoor temperature and humidity measurement, such as clean rooms, laboratories, hospitals, datacentres, schools, and many more application areas
- Also appropriate for measuring ambient temperature and humidity in cabinets or other small spaces

| Technical Parameters | |
|---|---|
| **Measuring Range** | Temperature: 0/50°C & 32/122°F, -20/80°C & -4/176°F or -40/60°C & -40/140°F<br>Humidity: 0-100% RH |
| **Standard Accuracy** | Temperature: 0.1°C (PT100, Class B @ 25°C / 77°F)<br>Humidity: 0.8% RH @ 25°C |
| **Hysteresis and Repeatability** | Temperature: 0.05°C<br>Humidity: 0.2%RH |
| **Long Term Stability** | Temperature: <0.1°C / year<br>Humidity: <1% RH / year |
| **Output Signal** | 4/20mA, 0/10V, 0/5V or RS485 |
| **Current Output** | 12 VDC power supply, RL ≤ 250Ω<br>24 VDC power supply, RL ≤ 500Ω |
| **Voltage Output** | RL ≥ 10 KΩ |
| **Overall Dimensions** | A Type: 3.3”x3.9”x0.9” (84mm*100mm*22mm), B Type: 3.3”x4.5”x1.1” (85mm*115mm*29mm) |
| **Housing Material** | ABS and Polycarbonate |
| **Protection Level** | IP30 |
| **Fire Rating** | V-0, refer to UL94 listing |
| **Product Certification** | CE, RoHS |
| **Display Type** | LCD @ -10/60°C or 14/140°F - Note: To be installed in non-condensing environments |
| **Working Environment** | -25/70°C or -13/158°F & 0-95% RH, No condensation |
| **Storage Environment** | -40/70°C or -40/158°F & 0-95% RH, No condensation |

**Dimensions (mm)**

A

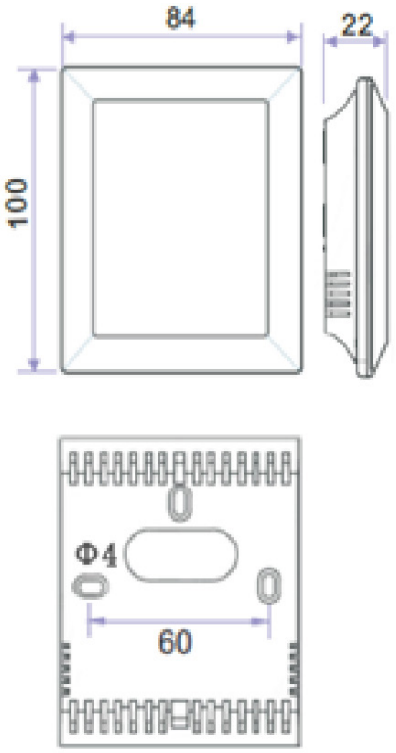


B

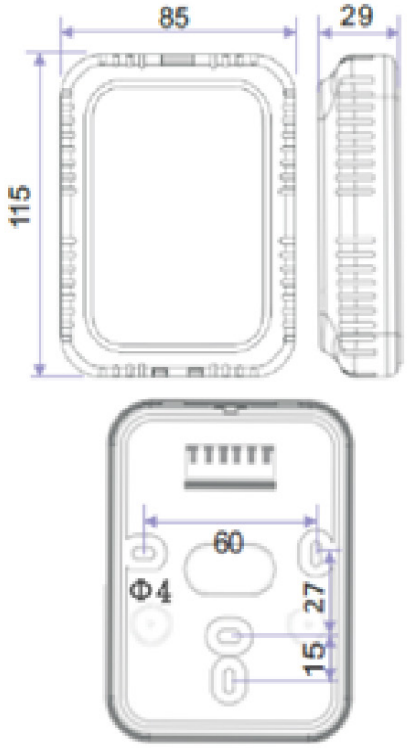


**100mm = 3.9”**
**84mm = 3.3”**
**22mm = 0.9”**

**115mm = 4.5”**
**85mm = 3.3”**
**29mm = 1.1”**

## Series Number (how to order)

**WTH1 - Indoor temperature and humidity transmitter engineering order codes**

| Description | Technical parameters | | | | | | |
|---|---|---|---|---|---|---|---|
| Power supply | 24 Vdc | 1 | | | | | |
| | 24 Vac | 2 | | | | | |
| | 12 Vdc | 3 | | | | | |
| Output signal | No output signal | | 0 | | | | |
| | 4/20 mA | | 1 | | | | |
| | 0/10 V | | 3 | | | | |
| | 0/5 V | | 6 | | | | |
| | RS485 | | R | | | | |
| Temperature range | No temperature reading | | | 0 | | | |
| *(PT1000)* | 0/50°C & 32/122°F | | | 1 | | | |
| | -20/80°C & -4/176°F | | | 3 | | | |
| | -40/60°C * -40/140°F | | | 4 | | | |
| | Customized | | | # | | | |
| Humidity accuracy | ±2% RH | | | | 2 | | |
| | ±3% RH | | | | 3 | | |
| | ±5% RH | | | | 5 | | |
| LCD | Without LCD display | | | | | - | |
| | With LCD display, °C and % Relative Humidity | | | | | SC | |
| | With LCD display, °C / °F and % Relative Humidity | | | | | DS | |
| Customization | Special ranges, labelling etc | | | | | | Z### |

**WRH1 - Indoor Humidity or Temperature Sensor enginering Order Codes**

| Description | Technical parameters | | | | | | |
|---|---|---|---|---|---|---|---|
| Power supply | 24 Vdc | 1 | | | | | |
| | 24 Vac | 2 | | | | | |
| | 12 Vdc | 3 | | | | | |
| Output signal | No output signal | | 0 | | | | |
| *(Humidity only)* | 4/20 mA | | 1 | | | | |
| | 0/10 V | | 3 | | | | |
| | 0/5 V | | 6 | | | | |
| | RS485 | | R | | | | |
| Temperature output | No temperature reading | | | 0 | | | |
| *(-40/80 °C/ -40/176°F)* | Pt100 | | | 1 | | | |
| | Pt1000 | | | 2 | | | |
| | NTC10K | | | 4 | | | |
| | NTC20K | | | 5 | | | |
| | Other types | | | # | | | |
| Humidity accuracy | ±2% RH | | | | 2 | | |
| | ±3% RH | | | | 3 | | |
| | ±5% RH | | | | 5 | | |
| LCD | Without LCD display | | | | | - | |
| | With LCD display, % Relative Humidity | | | | | RH | |
| Customization | Special ranges, labelling etc | | | | | | Z### |

# WRH5/ WTH5 Outdoor Temperature And Humidity Sensors and Transmitters



A Type



B Type

## Description & Features:

- The WRH5 and WTH5 series are outdoor temperature and humidity sensors with high-precision digital chips and built-in transmitter outputs
- These products offer multiple power supply options and analogue or digital output signals and a configurable LCD display
- Designed & manufactured with high-precision, fast-responding sensors with strong long-term stability
- They are available with a wide temperature range and multiple measurements and output modes suitable for a variety of HVAC control systems
- Protected with a higher IP housing rating for outdoor or harsh environment installations
- Complete protection against overvoltage, reverse polarity and EMC interference
- Easily integrates into many HVAC control systems and offers an optional high-definition LCD display for local indication
- 5 year warranty

## Applications:

- These products are installed in outdoor environments or in various harsh conditions for measurement of temperature and humidity
- They are installed in conjunction with HVAC control systems in many outside locations of buildings and manufacturing or process facilities

| Technical Parameters | |
|---|---|
| **Measuring Range** | Temperature: 0/50°C & 32/122°F, 0/100°C & 32/212°F, -20/80°C & -4/176°F or -40/60°C & -40/140°F<br>Humidity: 0-100% RH |
| **Standard Accuracy** | Temperature: 0.1°C (PT100, Class B @ 25°C / 77°F)<br>Humidity: 0.8% RH @ 25°C /77°F |
| **Hysteresis and Repeatability** | Temperature: 0.05°C<br>Humidity: 0.2%RH |
| **Long Term Stability** | Temperature: <0.1°C / year<br>Humidity: <1% RH / year |
| **Output Signal** | 4/20mA, 0/10V, 0/5V or RS485 |
| **Output** | Current @ RL ≤ 500Ω<br>Voltage @ RL ≤ 10kΩ |
| **Response Time** | T90 ≤ 10 seconds |
| **Power Supply** | 24 Vac/Vdc, 24 Vdc 2-wire |
| **Working Environment** | -40/80°C or -40/176°F & 0-95%RH, No condensation<br>LCD @ 0/50°C or 32/122°F |
| **Storage Environment** | -40/70°C or -40/158°F & 0-95% RH, No condensation |
| **Housing Material** | ABS and Polycarbonate |
| **Protection Level** | IP65 |
| **Fire Rating** | V-0, refer to UL94 listing |
| **Display Type** | LCD @ -10/60°C or 14/140°F - Note: To be installed in non-condensing environments |
| **Product Certification** | CE |

**Dimensions (mm)**

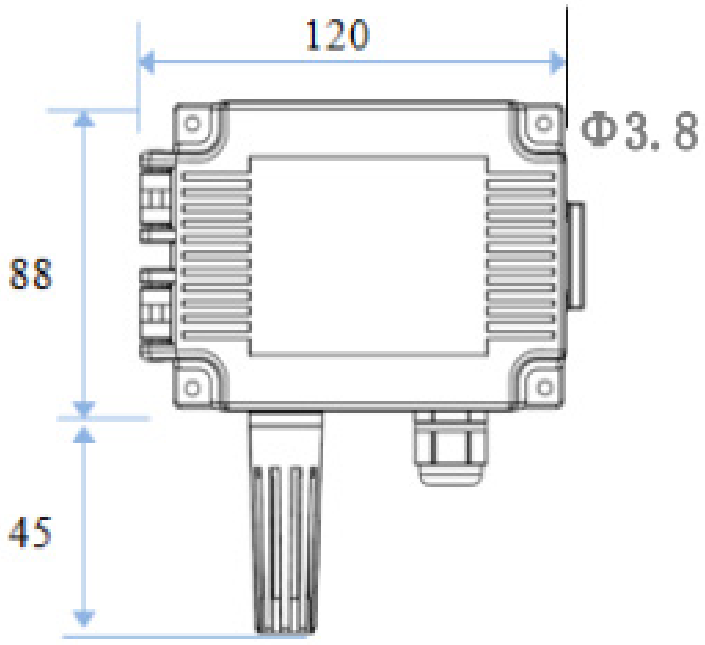


**120 mm = 4.7”**
**88mm = 3.5”**
**45 mm = 1.8”**

## Series Number (how to order)

| Description | Technical parameters | | | | | | |
|---|---|---|---|---|---|---|---|
| Power supply | 24 Vdc | 1 | | | | | |
| | 24 Vac | 2 | | | | | |
| Output signal | No output signal | | 0 | | | | |
| | 4/20 mA | | 1 | | | | |
| | 0/10 V | | 3 | | | | |
| | 0/5 V | | 6 | | | | |
| | RS485 | | R | | | | |
| Temperature range | No temperature reading | | | 0 | | | |
| *(PT1000)* | 0/50°C & 32/122°F | | | 1 | | | |
| | 0/100°C & 32/212°F | | | 2 | | | |
| | -20/80°C & -4/176°F | | | 3 | | | |
| | -40/60°C * -40/140°F | | | 4 | | | |
| | Customized (example - RS485) | | | D | | | |
| Humidity accuracy | ±2% RH | | | | 2 | | |
| | ±3% RH | | | | 3 | | |
| | ±5% RH | | | | 5 | | |
| LCD | Without LCD display | | | | | - | |
| | With LCD display, °C and % Relative Humidity | | | | | SC | |
| | With LCD display, °C / °F and % Relative Humidity | | | | | DS | |
| Customization | Special ranges, labelling etc | | | | | | Z### |

**WRH5 - Outdoor single humidity or temperature and humidity sensor engineering order codes**

| Description | Technical parameters | | | | | | |
|---|---|---|---|---|---|---|---|
| Power supply | 24 Vdc | 1 | | | | | |
| | 24 Vac | 2 | | | | | |
| Output signal | No output signal | | 0 | | | | |
| *(Humidity only)* | 4/20 mA | | 1 | | | | |
| | 0/10 V | | 3 | | | | |
| | 0/5 V | | 6 | | | | |
| | RS485 | | R | | | | |
| Temperature output | No temperature reading | | | 0 | | | |
| *(-40/80 °C/ -40/176°F)* | Pt100 | | | 1 | | | |
| | Pt1000 | | | 2 | | | |
| | NTC10K | | | 4 | | | |
| | NTC20K | | | 5 | | | |
| | Other types | | | # | | | |
| Humidity accuracy | ±2% RH | | | | 2 | | |
| | ±3% RH | | | | 3 | | |
| | ±5% RH | | | | 5 | | |
| LCD | Without LCD display | | | | | - | |
| | With LCD display, % Relative Humidity | | | | | RH | |
| Customization | Special ranges, labelling etc | | | | | | Z### |

# WTH52 Louvered Outdoor Temperature And Humidity Sensor And Transmitter



## Description & Features:

- The WRH5F2 is a fully enclosed, louvered outdoor temperature and humidity sensor with high-precision digital sensors and a built-in transmitter output
- All-weather, multi-layer louved design achieves natural ventilation while offering full environmental protection
- The louvers further protect the electronics from direct sunlight, rain intrusion and strong wind; full protection against extreme weather
- The built-in highly precise sensor chip provides real-time collection of atmospheric temperature and humidity
- They are available with a wide temperature range and multiple measurements and output modes suitable for a variety of HVAC control systems
- Complete protection against overvoltage, reverse polarity and EMC interference
- 5 year warranty

## Applications:

- These products are widely used in outdoor installations for environmental monitoring, meteorological observation, agricultural greenhouses and many more locations
- They are installed in conjunction with HVAC control systems in many outside locations of buildings and manufacturing or process facilities

*Note: Mounting bracket and 3x wing-nuts included*

| Specifications | |
|---|---|
| **Measuring Range** | Temperature: 0/50°C & 32/122°F, -20/80°C & -4/176°F or -40/60°C & -40/140°F<br>Humidity: 0-100% RH |
| **Standard Accuracy** | Temperature: 0.3C @ 25°C / 77°F<br>Humidity:±3% RH & 3°C, ±5% RH & 5°C (@ 25°C / 77°F & 20-80% RH) |
| **Output Signal** | 4/20 mA 2-wire<br>0/10 Vdc 3-wire<br>RS485 |
| **Output** | Current @ RL ≤ 500Ω<br>Voltage @ RL ≤ 10kΩ |
| **Response Time** | T90 ≤ 10 seconds |
| **Power Supply** | 10-30 Vdc |
| **Working Environment** | -40/80°C or -40/176°F & 0-95% RH, No condensation |
| **Storage Environment** | -40/70°C or -40/158°F & 0-90% RH, No condensation |
| **Electromagnetic Protection** | EMC refers to GB/T 13926, EN61000-6-2, EN61000-6-3 |
| **Housing Material** | UV protected ABS |
| **Protection Level** | IP65 |
| **Fire Rating** | V-0, refer to UL94 listing |
| **Wiring Type** | Outdoor & waterproof 4-wire shielded cable |
| **Installation Method** | Mounting bracket |

# WTH5F2 Louvered Outdoor Temperature And Humidity Sensor And Transmitter

## Dimensions (mm)



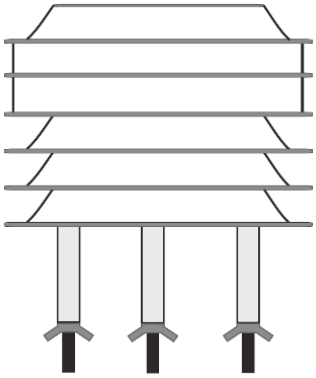





## Engineering Codes

**WTH5 - Outdoor temperature and humidity transmitter engineering order codes**

| Description | Technical parameters | | | | | | |
|---|---|---|---|---|---|---|---|
| Power supply | 24 Vdc | 1 | | | | | |
| Output signal | 4/20 mA | | 1 | | | | |
| | 0/10 V | | 3 | | | | |
| | RS485 | | R | | | | |
| Temperature range | 0/50°C & 32/122°F | | | 1 | | | |
| | 0/100°C & 32/212°F | | | 2 | | | |
| | -20/80°C & -4/176°F | | | 3 | | | |
| | -40/60°C * -40/140°F | | | 4 | | | |
| | Customized (example - RS485) | | | D | | | |
| Humidity accuracy | ±3% RH | | | | 3 | | |
| | ±5% RH | | | | 5 | | |
| LCD | Without LCD display | | | | | A | |
| Customization | Special ranges, labelling etc | | | | | | Z### |

# WRH2/ WTH2 Duct Type Temperature And Humidity Sensors And Transmitters



## Description & Features:

- The WRH2 and WTH2 series are indoor duct-type temperature and humidity sensors and transmitters with high-precision digital chips and built-in transmitter outputs
- These products offer multiple power supply options and analogue or digital output signals and a configurable LCD display
- Designed & manufactured with high-precision fast responding sensors with strong long-term stability
- They are available with a wide temperature ranges with multiple measurement and output modes and are suitable for a variety of HVAC control systems
- Higher IP housing rating and an optional high-definition LCD display
- Complete protection against overvoltage, reverse polarity and EMC interference
- Compact sizing with asthetically pleasing design and very easy to install
- 5 year warranty

## Applications:

- These products are widely installed in duct and ventillation chambers for the measurement of temperature and humidity
- They are installed in conjunction with HVAC control systems to control fresh air supply and return air systems
- They are found in commerial and institutional buildings including datacentres, laboratories, airports, manufacturing centres and many other other intelligent buildings

| Technical Parameters | |
|---|---|
| **Measuring Range** | Temperature: 0/50°C & 32/122°F, 0/100°C & 32/212°F, -20/80°C & -4/176°F or -40/60°C & -40/140°F<br>Humidity: 0-100% RH |
| **Standard Accuracy** | Temperature: 0.1°C (PT100, Class B @ 25°C / 77°F)<br>Humidity: 0.8% RH @ 25°C /77°F |
| **Hysteresis and Repeatability** | Temperature: 0.05°C<br>Humidity: 0.2%RH |
| **Long Term Stability** | Temperature: <0.1°C / year<br>Humidity: <1% RH / year |
| **Output Signal** | 4/20mA, 0/10V, 0/5V or RS485 |
| **Output** | Current @ RL ≤ 500Ω<br>Voltage @ RL ≤ 10kΩ |
| **Power Supply** | 24 Vac/Vdc, 24 Vdc 2-wire |
| **Working Environment** | -40/80°C or -40/176°F & 0-95%RH, No condensation<br>LCD @ 0/50°C or 32/122°F |
| **Storage Environment** | -40/70°C or -40/158°F & 0-95% RH, No condensation |
| **Housing Material** | ABS and Polycarbonate |
| **Protection Level** | IP65 |
| **Fire Rating** | V-0, refer to UL94 listing |
| **Display Type** | LCD @ -10/60°C or 14/140°F - Note: To be installed in non-condensing environments |
| **Product Certification** | CE |

# Duct Type Temperature And Humidity Sensors And Transmitters



**Dimensions (mm)**





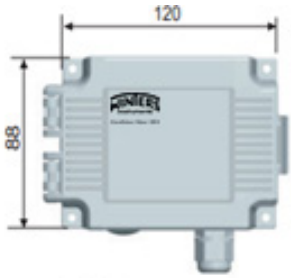




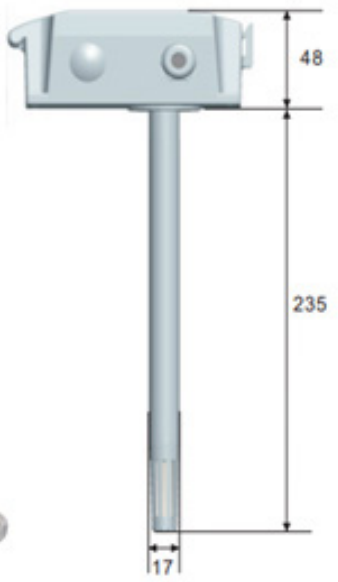


**235mm = 9.3”**
**120mm = 4.7”**
**88mm = 3.5”**
**48mm = 1.9”**
**17mm = 1.7”**

# Duct Type Temperature And Humidity Sensors And Transmitters



## Series Number (how to order)

**WTH2 - Duct Temperature and Humidity Transmitter Engineering Order Codes**

| Description | Technical parameters | | | | | | |
|---|---|---|---|---|---|---|---|
| Power supply | 24 Vdc | 1 | | | | | |
| | 24 Vac | 2 | | | | | |
| Output signal | No output signal | | 0 | | | | |
| | 4/20 mA | | 1 | | | | |
| | 0/10 V | | 3 | | | | |
| | 0/5 V | | 6 | | | | |
| | RS485 | | R | | | | |
| Temperature range | No temperature reading | | | 0 | | | |
| *(PT1000)* | 0/50°C & 32/122°F | | | 1 | | | |
| | 0/100°C & 32/212°F | | | 2 | | | |
| | -20/80°C & -4/176°F | | | 3 | | | |
| | -40/60°C * -40/140°F | | | 4 | | | |
| | Customized (example - RS485) | | | D | | | |
| Humidity accuracy | ±2% RH | | | | 2 | | |
| | ±3% RH | | | | 3 | | |
| | ±5% RH | | | | 5 | | |
| LCD | Without LCD display | | | | | - | |
| | With LCD display, °C and % Relative Humidity | | | | | SC | |
| | With LCD display, °C / °F and % Relative Humidity | | | | | DS | |
| Customization | Special ranges, stem dimensions, labelling etc | | | | | | Z### |

**WRH2 - Duct Single Humidity or Temperature Humidity Sensor Engineering Order Codes**

| Description | Technical parameters | | | | | | |
|---|---|---|---|---|---|---|---|
| Power supply | 24 Vdc | 1 | | | | | |
| | 24 Vac | 2 | | | | | |
| Output signal | No output signal | | 0 | | | | |
| *(Humidity only)* | 4/20 mA | | 1 | | | | |
| | 0/10 V | | 3 | | | | |
| | 0/5 V | | 6 | | | | |
| | RS485 | | R | | | | |
| Temperature output | No temperature reading | | | 0 | | | |
| *(-40/80 °C/ -40/176°F)* | Pt100 | | | 1 | | | |
| | Pt1000 | | | 2 | | | |
| | NTC10K | | | 4 | | | |
| | NTC20K | | | 5 | | | |
| | Other types | | | # | | | |
| Humidity accuracy | ±2% RH | | | | 2 | | |
| | ±3% RH | | | | 3 | | |
| | ±5% RH | | | | 5 | | |
| LCD | Without LCD display | | | | | - | |
| | With LCD display, % Relative Humidity | | | | | RH | |
| Customization | Special ranges, stem dimensions, labelling etc | | | | | | Z### |

# WPM2 Indoor and Ventilation Air Quality Sensors With Transmitter Output



**Description & Features:**

- WPM2 Series is a laser dust sensor that utilizes a laser light source to accurately measure the number of particles (PM2.5 or PM10)
- The unit outputs the particle mass concentration (μg/m3) through mathematical algorithms and transmits the information
- Large LCD display, analog or RS485 output or relay outputs are available
- Measurement accuracy and consistency up to ±10% reading or ±10μg/m3
- Complete protection against overvoltage, reverse polarity and EMC interference
- Customization available for dedicated installations and private labelling
- 5 year warranty

**Applications:**

- It is suitable for air purification and fresh air systems other places
- Widely used in intelligent HVAC systems in modern buildings, cabinets, machinery & equipment, trains & train stations, subways, airports, schools and other places
- The product is widely used in HVAC control systems of various types in commercial and government buildings as well as manufacturing and processing facilities

| Technical Parameters | |
|---|---|
| **Sensing Elements** | PM2.5 laser sensor, detects particle diameter 0.3-10 (PM2.5)<br>PM10 also available, Laser based scattering principle |
| **Concentration Range** | 0 - 500 μg /m³ |
| **Accuracy** | ±10% reading @ 25°C (77F) & 50% RH |
| **Power Consumption** | ≤ 1.2W |
| **Warm-up Time** | ≤ 8 s |
| **Response Time** | ≤ 1 s |
| **Operating Temperature** | -10/50°C (14 - 122°F) |
| **Operating Humidity** | 5 - 95 % RH, non-condensing |
| **Power Supply** | 24V AC/DC |
| **Output Signal** | 4/20mA, 0/10V, RS485 (Modbus RTU) |
| **Display Type** | LCD optional |
| **IP Rating** | Indoor type: fireproof ABS, IP30 - Refer to IEC529-598/GB 700-86/ GB 4208<br>Duct type: ABS+PC, IP65 - Refer to IEC529-598/GB 700-86/ GB 4208 |
| **Electromagnetic Compatibility** | EMC reference GB/T 13926, EN61000-6-2, EN61000-6-3 |

# WPM2 Indoor and Ventilation Air Quality Sensors With Transmitter Output

## Air Quality Levels

| Power supply | 24-hour PM2.5 average standard value |
|---|---|
| Excellent | 0 - 35 |
| Good | 35 - 75 |
| Slight Pollution | 75 - 115 |
| Moderate Pollution | 115 - 150 |
| Severe Pollution | 150 - 250 |
| Very Severe Pollution | › 250 |

## Wiring Instructions

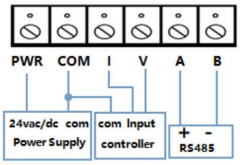


| Terminal No. | Definition | Illustrate |
|---|---|---|
| 1 | PWR | Power, positive |
| 2 | COM | Power, negative (common terminal) |
| 3 | I | 4-20mA current output+ |
| 4 | V | 0-10V voltage output+ |
| 5 | A | RS485 Output+ |
| 6 | B | RS485 output - |

## Dimensions (mm)

**Wall mount**

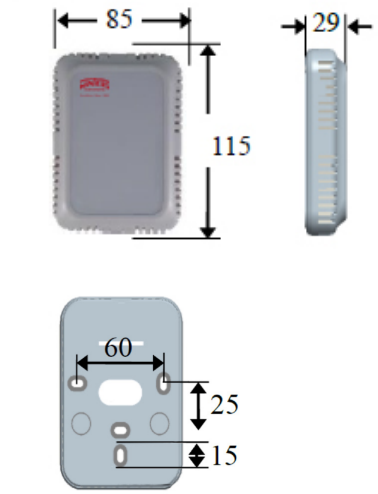


85mm = 3.35”
115mm = 4.53”
29mm = 1.14”
60mm = 2.36”
25mm = 0.98”
15mm = 0.59”
88mm = 3.46”
120mm = 4.72”
48mm = 1.89”
137mm = 5.39”
30mm = 1.18”

**Duct mount**

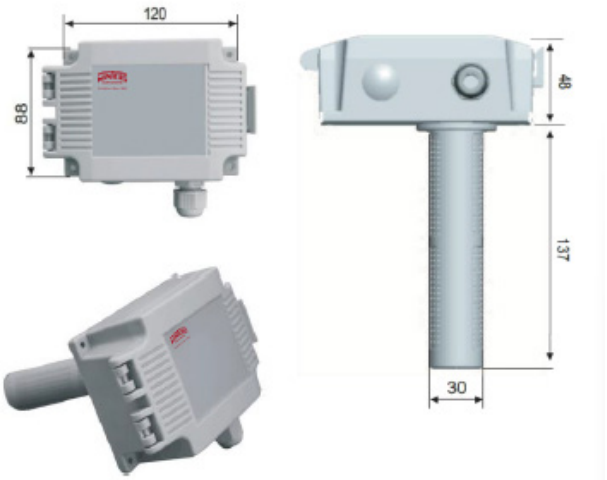


*Notes: To ensure the long life of the product, the filter should be cleaned regularly to prevent dust accumulation. PM2.5 refers to particles in the atmosphere with an aerodynamic equivalent diameter of less than or equal to 2.5 microns, also known as respirable particles*

## Selection Table

**WPM2 - Indoor & Ventillation Air Quality Sensors with Transmitter Output**

| Description | Technical parameters | | | | | | |
|---|---|---|---|---|---|---|---|
| Power supply | 24 Vac/Vdc | 4 | | | | | |
| Output signal | 4/20 mA | | 1 | | | | |
| | 0/10 V | | 3 | | | | |
| | RS485 | | R | | | | |
| Particulate Size | PM2.5 | | | 25 | | | |
| | PM10 | | | 10 | | | |
| Mounting Type | Wall Mounting Type | | | | W1 | | |
| | Ventillation Mounting, 140mm (5.5") stem insertion | | | | V1 | | |
| LCD | Without LCD display | | | | | - | |
| | LCD display included | | | | | L | |
| Customization | Special types, labelling etc | | | | | | Z### |

# WCES All-In-One Air Quality Detector







**Description & Features:**

- WCES Series is a comprehensive air quality detector with high-precision sensor elements with digital circuitry
- The WCES detects and measures simultaneous environments all at once
- Designed for wall-mounting in occupied areas and with fixed duct mounting for ventilation systems
- Each module may be equipped with as few as two (2) sensing elements or as many as eight (8) sensing elements
- Sensing types include temperature, humidity, TVOC, PM2.5, PM10, CO, CO2, CH2O (formaldehyde), NH3 (ammonia) and O3 (ozone)
- Available with and without an LCD screen and the standard output is RS485 (Modbus RTU)
- Complete protection against overvoltage, reverse polarity and EMC interference
- Customization available for dedicated installations and private labelling
- 5 year warranty

**Applications:**

- WCES all-in-one unit in the detection and measurement of air quality with a variety of embedded sensors
- Appropriate for installation in occupied (meeting & board rooms etc) and unoccupied areas (duct and ventilation chambers)
- Widely used in intelligent HVAC systems in modern buildings, machinery & equipment, train stations, subways, airports, schools and other places
- The product is widely used in HVAC control systems of various types in commercial and government buildings as well as manufacturing and processing facilities

| Technical Parameters | |
|---|---|
| **Output Signal** | RS485 (Modbus RTU) |
| **Power Supply** | 24 VDC standard, 24 VAC optional |
| **Mounting Height** | Wall-mounted position, 1.2m-1.8m (3.9'-26.25') above ground level |
| **Response Time** | T90 ≤ 60s |
| **Warm-up Time** | < 600 s |
| **Working Environment** | −10° to 60°C (14°F to 140°F) & 0–95%RH, non-condensing |
| **Housing Material** | ABS + PC |
| **Protection Class** | IP30 (indoor type), IP65 (duct type) |
| **Fire Rating** | V-0 per UL94 standard |
| **Display** | LCD (optional) |
| **Certification** | CE |

| Sensor Type | Range | Accuracy |
|---|---|---|
| Temperature | −20° to 80°C (−4° to 176°F) | ±0.3°C (33°F) @25°C (77°F) |
| Humidity | 0–100% RH | ±3% RH @25°C (77°F) & 50% RH |
| TVOC | 0–2000 PPB | ±10% FS |
| PM2.5 | 0–1000 µg/m³ | ±10 µg + 10% of reading |
| PM10 | 0–1000 µg/m³ | ±10 µg + 10% of reading |
| CO | 0–1000 PPM | ±5% FS |
| CO2 | 0–5000 PPM | ±50 PPM + 5% of reading |
| CH2O (Formaldehyde) | 0–2000 PPB | ±5% FS |
| NH3 (Ammonia) | 0–50 PPM | 5 PPM ±5% FS |
| H2S | 0–100 PPM | 10 PPM ±5% FS |
| O3 (Ozone) | 0–5 mg/m³ | 0.5 mg ±5% FS |

**Dimensions (mm)**

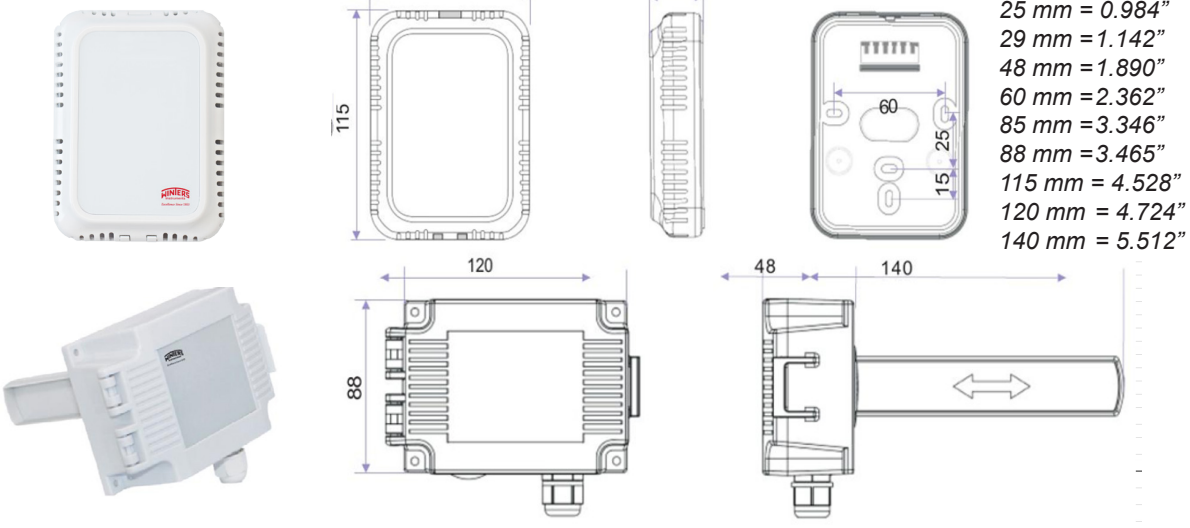


*15 mm = 0.591"*
*25 mm = 0.984"*
*29 mm = 1.142"*
*48 mm = 1.890"*
*60 mm = 2.362"*
*85 mm = 3.346"*
*88 mm = 3.465"*
*115 mm = 4.528"*
*120 mm = 4.724"*
*140 mm = 5.512"*

## Selection Table

**WCES Series - Indour Wall Mountable - All In One Air Quality Environmental Sensor**

| Description | Technical parameters | | | | | | |
|---|---|---|---|---|---|---|---|
| Indoor use | Occupied locations, wall mountable | B | | | | | |
| Power supply | 24 Vdc | | 1 | | | | |
| | 24 Vac | | 2 | | | | |
| Output signal | RS485 | | | R | | | |
| Sensing Type | 2 in 1 - TVOC & $CH_2O$ | | | | 20 | | |
| | 2 in 1 - $CO_2$ & PM2.5 | | | | 21 | | |
| | 2 in 1 - CO & CO | | | | 22 | | |
| | 3 in 1 - Temperature, Humidity & $CO_2$ | | | | 30 | | |
| | 3 in 1 - Temperature, Humidity & CO | | | | 31 | | |
| | 3 in 1 - $CO_2$, PM2.5 & PM10 | | | | 32 | | |
| | 3 in 1 - $CO_2$, TVOC & PM2.5 | | | | 33 | | |
| | 4 in 1 - TVOC, $CH_2O$, PM2.5 & PM10 | | | | 40 | | |
| | 4 in 1 - TVOC, $CO_2$, PM2.5 & $CH_2O$ | | | | 41 | | |
| | 4 in 1 - Temperature, Humidity, TVOC & PM2.5 | | | | 42 | | |
| | 4 in 1 - Temperature, Humidity, TVOC & $CO_2$ | | | | 43 | | |
| | 4 in 1 - Temperature, Humidity, $CO_2$ & PM2.5 | | | | 44 | | |
| | 4 in 1 - Temperature, Humidity, $CO_2$ & $CH_2O$ | | | | 45 | | |
| | 5 in 1 - Temperature, Humidity, $CO_2$, PM2.5 & $CH_2O$ | | | | 50 | | |
| | 5 in 1 - Temperature, Humidity, TVOC, $CO_2$ & $CH_2O$ | | | | 51 | | |
| | 5 in 1 - Temperature, Humidity, TVOC, $CO_2$ & PM2.5 | | | | 52 | | |
| | 5 in 1 - Temperature, Humidity, $CO_2$, PM2.5 & PM10 | | | | 53 | | |
| | 5 in 1 - Temperature, Humidity, PM2.5, $NH_3$ & $H_2S$ | | | | 54 | | |
| | 6 in 1 - Temperature, Humidity, TVOC, $CO_2$, PM2.5 & PM10 | | | | 60 | | |
| | 6 in 1 - Temperature, Humidity, $CH_2O$, $CO_2$, PM2.5 & PM10 | | | | 61 | | |
| | 6 in 1 - Temperature, Humidity, $CH_2O$, TVOC, PM2.5 & PM10 | | | | 62 | | |
| | 6 in 1 - Temperature, Humidity, $CH_2O$, TVOC, $CO_2$ & PM2.5 | | | | 63 | | |
| | 6 in 1 - Temperature, Humidity, $CH_2O$, TVOC, $CO_2$ & $NH_3$ | | | | 64 | | |
| | 7 in 1 - Temperature, Humidity, TVOC, $CO_2$, PM2.5, PM10 & $CH_2O$ | | | | 70 | | |
| | 8 in 1 - Temperature, Humidity, TVOC, $CO_2$, PM2.5, PM10, $CH_2O$ & $O_3$ | | | | 80 | | |
| | Other types | | | | # | | |
| LCD | Without LCD display | | | | | - | |
| | LCD display included | | | | | L | |
| Customization | Special types, labelling etc | | | | | | Z### |

**WCES Series - Duct Mountable - All In One Air Quality Environmental Sensor**

| Description | Technical parameters | | | | | | |
|---|---|---|---|---|---|---|---|
| Power supply | 24 Vdc | | 1 | | | | |
| | 24 Vac | | 2 | | | | |
| Output signal | RS485 | | | R | | | |
| Sensing Type | 2 in 1 - TVOC & $CH_2O$ | | | | 20 | | |
| | 2 in 1 - $CO_2$ & PM2.5 | | | | 21 | | |
| | 2 in 1 - CO & CO | | | | 22 | | |
| | 3 in 1 - Temperature, Humidity & $CO_2$ | | | | 30 | | |
| | 3 in 1 - Temperature, Humidity & CO | | | | 31 | | |
| | 3 in 1 - $CO_2$, PM2.5 & PM10 | | | | 32 | | |
| | 3 in 1 - $CO_2$, TVOC & PM2.5 | | | | 33 | | |
| | 4 in 1 - TVOC, $CH_2O$, PM2.5 & PM10 | | | | 40 | | |
| | 4 in 1 - TVOC, $CO_2$, PM2.5 & $CH_2O$ | | | | 41 | | |
| | 4 in 1 - Temperature, Humidity, TVOC & PM2.5 | | | | 42 | | |
| | 4 in 1 - Temperature, Humidity, TVOC & $CO_2$ | | | | 43 | | |
| | 4 in 1 - Temperature, Humidity, $CO_2$ & PM2.5 | | | | 44 | | |
| | 4 in 1 - Temperature, Humidity, $CO_2$ & $CH_2O$ | | | | 45 | | |
| | 5 in 1 - Temperature, Humidity, $CO_2$, PM2.5 & $CH_2O$ | | | | 50 | | |
| | 5 in 1 - Temperature, Humidity, TVOC, $CO_2$ & $CH_2O$ | | | | 51 | | |
| | 5 in 1 - Temperature, Humidity, TVOC, $CO_2$ & PM2.5 | | | | 52 | | |
| | 5 in 1 - Temperature, Humidity, $CO_2$, PM2.5 & PM10 | | | | 53 | | |
| | 5 in 1 - Temperature, Humidity, PM2.5, $NH_3$ & $H_2S$ | | | | 54 | | |
| | 6 in 1 - Temperature, Humidity, TVOC, $CO_2$, PM2.5 & PM10 | | | | 60 | | |
| | 6 in 1 - Temperature, Humidity, $CH_2O$, $CO_2$, PM2.5 & PM10 | | | | 61 | | |
| | 6 in 1 - Temperature, Humidity, $CH_2O$, TVOC, PM2.5 & PM10 | | | | 62 | | |
| | 6 in 1 - Temperature, Humidity, $CH_2O$, TVOC, $CO_2$ & PM2.5 | | | | 63 | | |
| | 6 in 1 - Temperature, Humidity, $CH_2O$, TVOC, $CO_2$ & $NH_3$ | | | | 64 | | |
| | 7 in 1 - Temperature, Humidity, TVOC, $CO_2$, PM2.5, PM10 & $CH_2O$ | | | | 70 | | |
| | 8 in 1 - Temperature, Humidity, TVOC, $CO_2$, PM2.5, PM10, $CH_2O$ & $O_3$ | | | | 80 | | |
| | Other types | | | | # | | |
| LCD | Without LCD display | | | | | - | |
| | LCD display included | | | | | L | |
| Customization | Special types, labelling etc | | | | | | Z### |

*Note: Due to the limitations of the product housing, not all sensing options may be combined together. Please consult Winters specific combination options*

### Concentration Units and Conversions

Volume Concentration (PPM): The volume of the measured gas contained in every one million volume of air
Mass Concentration (mg/m³): The mass of the measured gas contained in each cubic metre of air
Unit Conversion: Volume concentration = Mass concentration / M × 22.4;
Mass concentration = M / 22.4 × Volume concentration (M = molecular weight of the measured gas)
1 PPM = 1,000 PPB = 1,000,000 PPT
1% VOL = 10,000 PPM (this unit is commonly used at higher concentrations)

# LPDA1 Water Leak Detection Sensor - Non-Location Type



**Description & Features:**

- The LPDA1 Series is a non-positioning cable-type water leakage detector for high-performance water leakage indication
- It can be used with water leakage detection cables or other detection probes to accurately determine the occurrence of water leakage
- It may easily integrate with any third party monitoring system or HVAC controls platform for remote equipment control
- Includes a relay output (normally open/normally closed) for signalling
- Length of the detection cable can be customized according application requirements
- 5 year warranty

**Applications:**

- The LPDA1 is widely used in server & mechanical rooms, pipe stacks, sub-level floors including basements, computer rooms, refrigeration warehouses, cooling & water tower, swimming pools, e-houses. and many other locations where water seapage and overflow may damage equipment and early detection and alarming is required

| Specifications | |
|---|---|
| **Supply voltage** | 12/24VDC (standard), 12/24VAC (optional) |
| **Alarm Mode** | Relay + Alarm (audible) |
| **Load Capacity** | 2A @ 30Vdc / 1A @ 125Vac |
| **Working environment** | -30/60°C (-22/140°F), 10/80 % RH (no condensation) |
| **Storage environment** | -20/50°C (-4/122°F), 10/80 % RH (no condensation) |
| **Stand-by Current** | < 20 mA @ 24 Vdc |
| **Alarm Current** | < 60 mA @ 24 Vdc |
| **Sensing Cable Length** | 5 to 500 m / (customizable) |
| **Housing Material** | ABS + PC |
| **Cable Material** | Teflon + conductive polyethylene + alloy |
| **Installation Options** | Screw fixed installation, housing includes mounting holes |
| **Product Certification** | CE |

## Additional Items

Cable mounting clip
5-pcs included with 5m cable



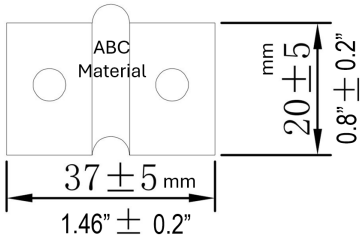


2m / 6.5' Lead-out cable



5m / 16' Detection cable
2-wire, spiral wound



Note: Perform regular inspections & maintenance on the cables to ensure they are clean and free of dust and particles to avoid false readings and alarms. Also during installation, avoid contact with metal filings, grease, lubrication and any other contaminants.

# LPDA1 Water Leak Detection Sensor - Non-Location Type

## Typical Installation

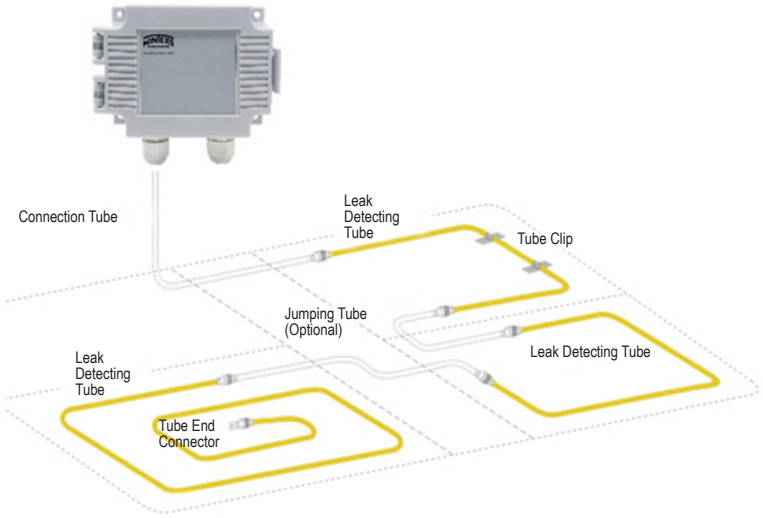


## Selection Table

**LPDA1 - Indoor Water Leak Sensor - Non-Location Type**

| Description | Technical parameters | | | | | |
|---|---|---|---|---|---|---|
| Power supply | 12/24 Vdc | 1 | | | | |
| | 12/24 Vac | 2 | | | | |
| Output signal | Relay + Alarm | | 8 | | | |
| Lead-out cable | No cable | | | - | | |
| | 2m / 6.5' lead-out cable | | | W3B2 | | |
| Detection cable | No cable | | | | - | |
| | 5m / 16' | | | | W3A5 | |
| | 10m / 33' | | | | W3A10 | |
| | 15m / 49' | | | | W3A15 | |
| | 20m / 66' | | | | W3A20 | |
| | 25m / 82 | | | | W3A25 | |
| | 30m / 90 | | | | W3A30 | |
| | up to 500m / 1,640' | | | | W3A### | |
| Customization | Special types, labelling etc | | | | | Z### |

**Additional items:**

| | | |
|---|---|---|
| Extra mounting clips | LPDAC10 | 10 pcs |
| | LPDAC25 | 25 pcs |

# LPDA2 Water Leak Detection Sensor - Non-Location Type



**Description & Features:**

- LPDA2 Series is a high-performing, accurately positioning cable-type water leakage detection sensor
- It is used in conjuction with water leakage detection cables to determine the occurrence and location of water leakage
- Clearly indicates where along the cable the water has been detected
- It can easily be integrated into an HVAC monitoring system via RS485
- Includes an integrated relay and alarm for remote monitoring
- LED display is included

**Applications:**

- The LPDA2 is widely used in server & mechanical rooms, pipe stacks, sub-level floors including basements, computer rooms, refrigeration warehouses, cooling & water towers, swimming pools, e-houses. and many other locations where water seapage and overflow may damage equipment and early detection and alarming is required

| Specifications | |
|---|---|
| **Supply Voltage** | 9/36 Vdc (standard) 24 Vac (optional) |
| **Output Type** | Relay, Alarm, RS485, LED display |
| **Load Capacity** | 1A @ 30 Vdc / 0.5A @ 125 Vac |
| **Working Conditions** | -30/60°C (-22/140°F), 10/80 % RH (no condensation) |
| **Storage Conditions** | -20/50°C (-4/122°F), 10/80 % RH (no condensation) |
| **Stand-by Current** | < 20 mA |
| **Alarm Current** | < 60 mA |
| **Sensing Cable Length** | 5 to 200 m / 16 to 656' (customizable) |
| **Water Leakage Detection Cable Material** | Teflon + conductive polyethylene + alloy (spiral wound)<br>*Four-core water leakage detection cable (one set for leakage detection and one for transmission)* |
| **Housing Material** | ABS+PC |
| **Installation Type** | 35mm DIN-rail |
| **Product Certification** | CE |

# LPDA2 | Water Leak Detection Sensor - Non-Location Type

## Product Model



Relay+RS485+buzzer+LED display

## Additional Items

Cable Mounting Clip



3m /10' Lead-out cable



5m / 16' Detection cable
Four-wire, spiral



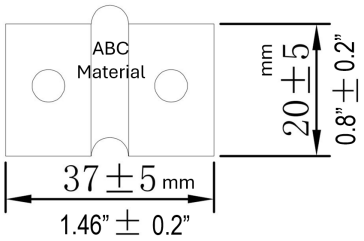


**Note: Perform regular inspections & maintenance on the cables to ensure they are clean and free of dust and particles to avoid false readings and alarms. Also during installation, avoid contact with metal filings, grease, lubrication and any other contaminants.**

## Selection Table

### LPDA2 - Indoor Water Leak Sensor - Positioning Type

| Description | Technical parameters | | | | |
|---|---|---|---|---|---|
| Power supply | 9/36Vdc | 1 | | | |
| | 24Vac | 2 | | | |
| Output signal | LCD + Relay + Alarm + RS485 | | 9 | | |
| | 3m / 10' lead-out cable | | | W4B3 | |
| Detection cable | No cable | | | | - |
| | 5m / 16' | | | | W4A5 |
| | 10m / 33' | | | | W4A10 |
| | 15m / 49' | | | | W4A15 |
| | 20m / 66' | | | | W4A20 |
| | 25m / 82 | | | | W4A25 |
| | 30m / 90 | | | | W4A30 |
| | up to 200m / 656' | | | | W4A### |
| Customization | Special types, labelling etc | | | | Z### |

**Additional items:**

| | | |
|---|---|---|
| Extra mounting clips | LPDAC10 | 10 pcs |
| | LPDAC25 | 25 pcs |

# WC01 Indoor and Ventilation Carbon Monoxide Transmitter



**Description & Features:**

- WCO1 Series carbon monoxide transmitter incorporates high-precision electrochemical sensor elements, with high-performance digital technology
- WC01 offers high accuracy and good long-term stability
- Large LCD display, analog or RS485 output are available
- Measurement accuracy and consistency < 5%
- Complete protection against overvoltage, reverse polarity and EMC interference
- Customization available for dedicated installations and private labelling
- 5 year warranty

**Applications:**

- WC01 is widely used in the measurement and control of CO concentrations in various facilities and locations
- Widely used in intelligent HVAC systems in modern buildings, control cabinets, machinery & equipment, train stations, subways, airports, schools and other places
- The product is widely used in HVAC control systems of various types in commercial and government buildings as well as manufacturing and processing facilities

| Technical Parameters | |
|---|---|
| **Sensing Elements** | Environmentally friendly amperometric gas |
| **Measuring Range** | 0-100PPM or 0-400PPM (standard) |
| **Accuracy** | < 5% |
| **Warm-up Time** | ≤ 180s |
| **Response Time** | T90 ≤ 60 s |
| **Operating Temperature** | -10/60°C (10/140°F) & 0-95%RH, non-condensing |
| **Storage Temperature** | -20/80°C (-4/176°F) & 0-95%RH, without condensation |
| **Installation Height** | 1.2-1.8m / 47”-71” (above ground level) |
| **Power Supply** | 24V AC/DC |
| **Output Signal** | 4/20mA, 0/10V, RS485 (Modbus RTU) |
| **Display Type** | LCD optional |
| **IP Rating** | IP30 (Indoor type), IP65 (Ventilation type) |
| **Housing Material** | Fireproof ABS + PC |
| **Housing (fire) Rating** | V-0 Refer to UL94 standard |
| **Electromagnetic Compatibility** | EMC reference GB/T 13926, EN61000-6-2, EN61000-6-3 |
| **Product Certification** | CE |

# WC01 Indoor and Ventilation Carbon Monoxide Transmitter

## Wiring Instructions

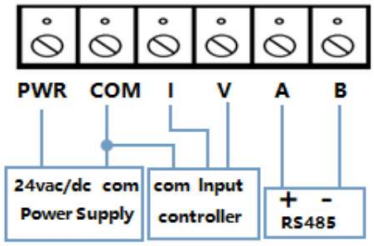


| Terminal No. | Definition | Illustrate |
|---|---|---|
| 1 | PWR | Power, positive |
| 2 | COM | Power, negative (common ter |
| 3 | I | 4-20mA current output+ |
| 4 | V | 0-10V voltage output+ |
| 5 | A | RS485 Output+ |
| 6 | B | RS485 output - |

## Dimensions (mm)

Wall mount

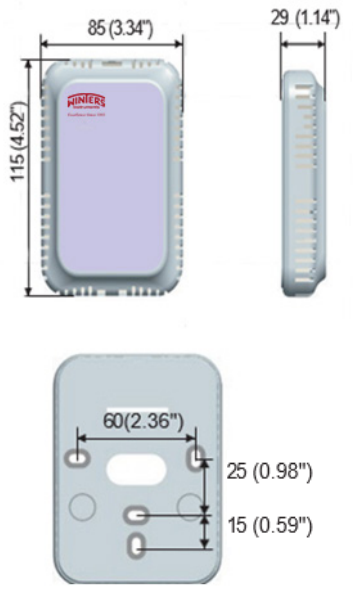


Duct mount

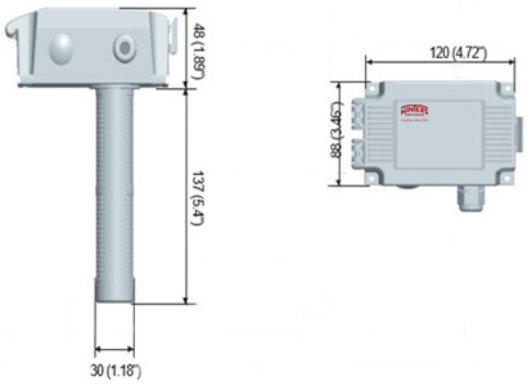


## Selection Table

**WCO1 - Indoor & Ventillation Carbon Monoxide Transmitter**

| Description | Technical parameters | | | | | | |
|---|---|---|---|---|---|---|---|
| Power supply | 24 Vac/Vdc | 4 | | | | | |
| Output signal | 4/20 mA | | 1 | | | | |
| | 0/10 V | | 3 | | | | |
| | RS485 | | R | | | | |
| Measuring range | 0-100 PPM | | | 1 | | | |
| | 0-400 PPM (standard) | | | 2 | | | |
| | Other ranges | | | D | | | |
| Mounting Type | Wall Mounting Type | | | | W1 | | |
| | Ventillation Mounting, 137mm (5.4") stem insertion | | | | V1 | | |
| LCD | Without LCD display | | | | | - | |
| | LCD display included | | | | | L | |
| Customization | Special types, labelling etc | | | | | | Z### |

Note: The conventional measurement range of CO1 concentration is 0-400PPM.
If other concentration ranges are required, please contact WINTERS
Integrated models are also available incorporating CO, CO2, PM2.5, PM10, TVOC & CH20

Concentration unit and conversion: (volume concentration)
Volume concentration: The volume of the measured gas per cubic meter of atmosphere (cubic centimeters), such as (cm3/m3 or ml/m3), the commonly used unit is PPM
1PPM = 1 cubic centimeter/cubic meter
Unit conversion: 1PPM = 1000 PPB = 1000000 PPT

# WC02 Indoor and Ventilation Carbon Dioxide Transmitter





**Description & Features:**

- WCO2 Series carbon dioxide transmitter incorporates high-precision NDIR digital non-dispersive infrared detector as the sensing element
- WCO2 offers high accuracy and good long-term stability
- Large LCD display, analog or RS485 output are available
- Measurement accuracy and consistency < 5%
- Complete protection against overvoltage, reverse polarity and EMC
- interference
- Customization available for dedicated installations and private labelling
- 5 year warranty

**Applications:**

- WCO2 is widely used in the measurement and control of carbon dioxide concentrations in various facilities and locations
- Widely used in intelligent HVAC systems in modern buildings, control cabinets, machinery & equipment, train stations, subways, airports, schools and other places
- The product is widely used in HVAC control systems of various types in commercial and government buildings as well as manufacturing and processing facilities

| Technical Parameters | |
|---|---|
| **Sensing Elements** | NDIR sensor with ABC self-calibration function |
| **Measurement Principle** | Active gas diffusion |
| **Measuring Range** | 0-2000 PPM |
| **Accuracy** | 0-2000 PPM; ± 50PPM ±5% READING<br>0-2000 PPM; ± 30PPM ±3% READING<br>0-2000 PPM; ± 80PPM ±5% READING |
| **Accuracy Drift** | < ±10 PPM/years |
| **Warm-Up Time** | <180 s |
| **Response Time** | T90 ≤ 10 s (30cc/min, slow flow air) |
| **Operating Temperature** | 0/50°C (32/122°F) & 0-95%RH, non-condensing |
| **Storage Temperature** | -20/80°C (-4/176°F) & 0-95%RH, without condensation |
| **Power Supply** | 24V AC/DC |
| **Output Signal** | 4/20mA, 0/10V, RS485 (Modbus RTU) |
| **Display Type** | LCD optional |
| **IP Rating** | IP30 (Indoor type), IP65 (Ventilation type) |
| **Housing Material** | Fireproof ABS + PC |
| **Housing (fire) Rating** | V-0 Refer to UL94 standard |
| **Electromagnetic Compatibility** | EMC reference GB/T 13926, EN61000-6-2, EN61000-6-3 |
| **Product Certification** | CE |

# WC02 Indoor and Ventilation Carbon Dioxide Transmitter

## Wiring Instructions

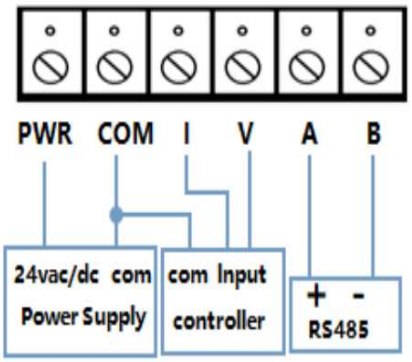


| Terminal No. | Definition | Illustrate |
|---|---|---|
| 1 | PWR | Power, positive |
| 2 | COM | Power, negative (common terminal) |
| 3 | I | 4-20mA current output+ |
| 4 | V | 0-10V voltage output+ |
| 5 | A | RS485 Output+ |
| 6 | B | RS485 output - |

## Dimensions (mm)

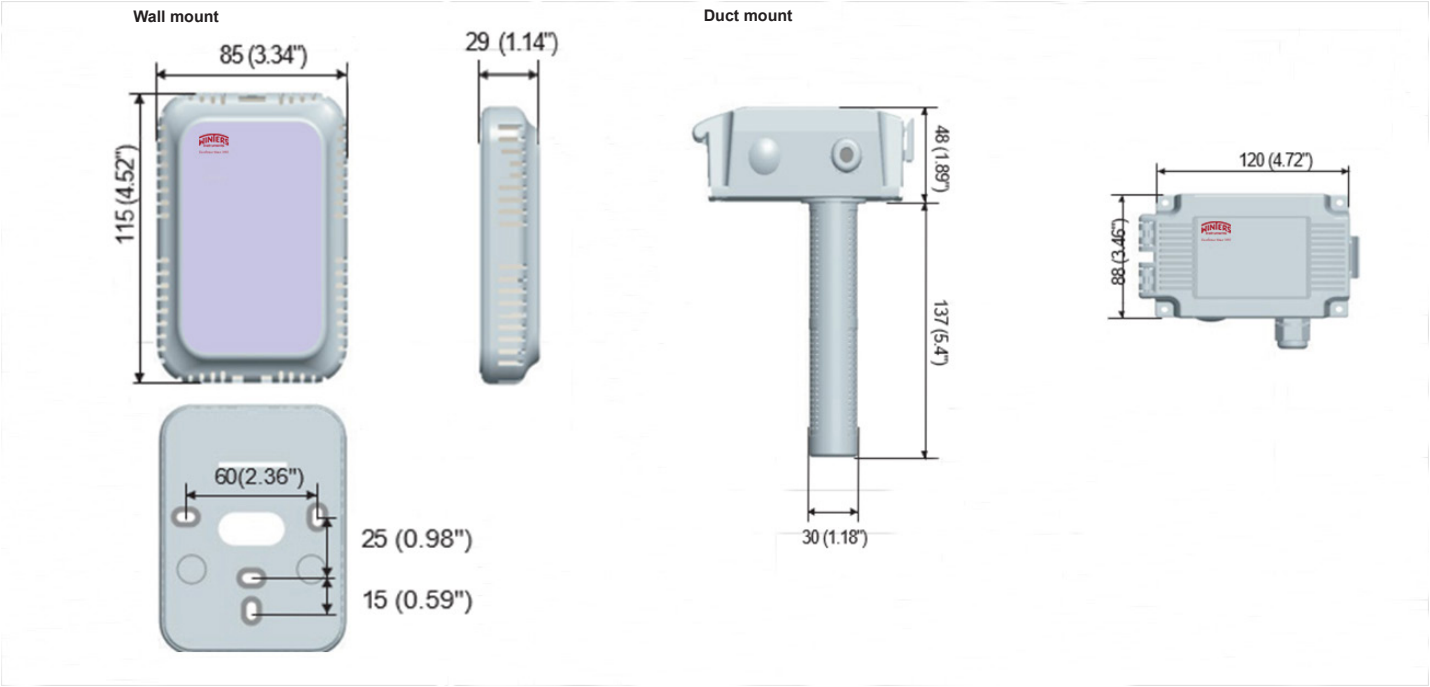


## Selection Table

**WCO2 - Indoor & Ventillation Carbon Dioxide Transmitter**

| Description | Technical parameters | | | | | | |
|---|---|---|---|---|---|---|---|
| Power supply | 24 Vac/Vdc | 4 | | | | | |
| Output signal | 4/20 mA | | 1 | | | | |
| | 0/10 V | | 3 | | | | |
| | RS485 | | R | | | | |
| Measuring range | 0-2000 PPM ; ± 50PPM ±5% READING | | | 1 | | | |
| | 0-2000 PPM ; ± 30PPM ±3% READING | | | 2 | | | |
| | 0-5000 PPM ; ± 80PPM ±5% READING | | | 3 | | | |
| | Other ranges | | | D | | | |
| Mounting Type | Wall Mounting Type | | | | W1 | | |
| | Ventillation Mounting, 137mm (5.4") stem insertion | | | | V1 | | |
| LCD | Without LCD display | | | | | - | |
| | LCD display included | | | | | L | |
| Customization | Special types, labelling etc | | | | | | Z### |

Note: The conventional measurement range of CO2 concentration is 0-2000PPM,
If necessary, it can be extended to 0-5000PPM or 0-10000PPM
Integrated models are also available incorporating CO, CO2, PM2.5, PM10, TVOC & CH20

# WN02 Nitrogen Dioxide (NO2) Gas Detector



**Description & Features:**

- The WNO2 Series is specifically designed for continuous monitoring of NO2 gas concentration in any environment
- Heavy-duty die-cast aluminum housing for installation in a wide range of environmental areas
- Designed for wall-mounting for convenient installation
- Available with built-in display (LED or LCD) screen and audible/visual alarm for on-site monitoring and immediate signalling (audible alert)
- May be integrated into various gas alarm systems or PLC/DCS control systems with standard analogue or RS485 (Modbus RTU) output
- Customization available for dedicated installations and private labelling
- 1 year warranty

**Applications:**

- The WNO2 is a product which is suitable for all environments where nitrogen dioxide gas is present or may be present
- Appropriate for installation in occupied (meeting & board rooms etc) and unoccupied areas (duct and ventilation chambers, hazardous equipment)
- Widely used for industrial safety and environmental quality monitoring, combustion process control, laboratory safety and as a method for early fire safety warning

| Technical Parameters | |
|---|---|
| **Detected Gas** | Nitrogen Dioxide (NO2) |
| **Detection Principle** | Electrochemical |
| **Measurement Range** | 0-20 PPM |
| **Output Signal** | 4-20mA (3-wire), RS485 (Modbus-RTU) |
| **Power Supply** | 24VDC |
| **Display** | No Display, LED or LCD; Resolution 0.1 PPM |
| **Alarm Mode** | Audible & visual (≥85dB buzzer) |
| **Alarm Point** | 5 PPM |
| **Response Time** | T90 ≤ 60 s; Warm-up <30 s |
| **Accuracy** | ≤ ±3% FS; Repeatability ≤ ±2% |
| **Working Environment** | -10° to 50°C (14° to 122°F) & 15–90%RH, non-condensing |
| **Sensor Lifespan** | Typical 2–3 years (depending on ambient conditions) |
| **Installation** | Wall-mounted |
| **Housing Material** | Die-Cast aluminum |
| **Enclosure Rating** | IP65 |
| **Certification** | CE |

# WN02 Nitrogen Dioxide (NO2) Gas Detector

## Dimensions (mm)

***Wall Mounted***





*102 mm = 4.0”*
*118 mm = 4.6”*
*136 mm = 5.4”*
*144 mm = 5.7”*

***Cross Section***

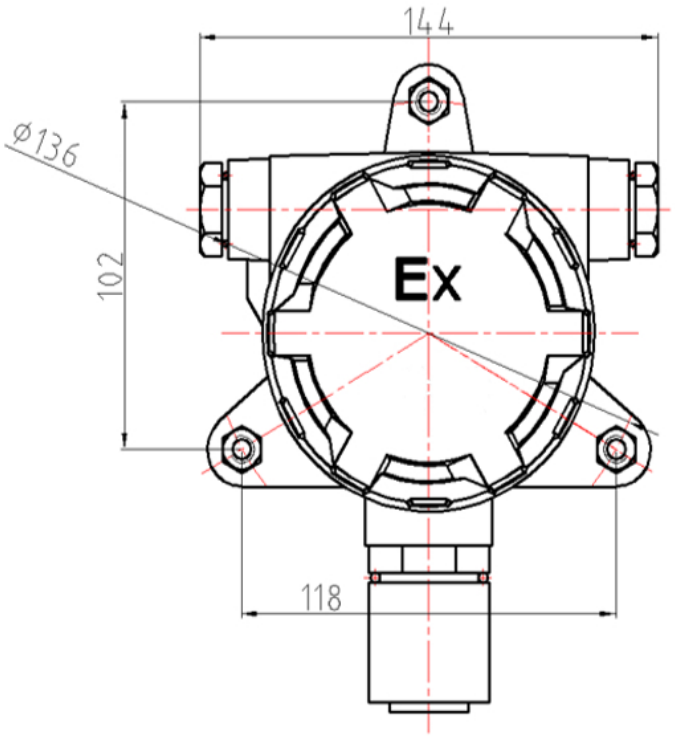


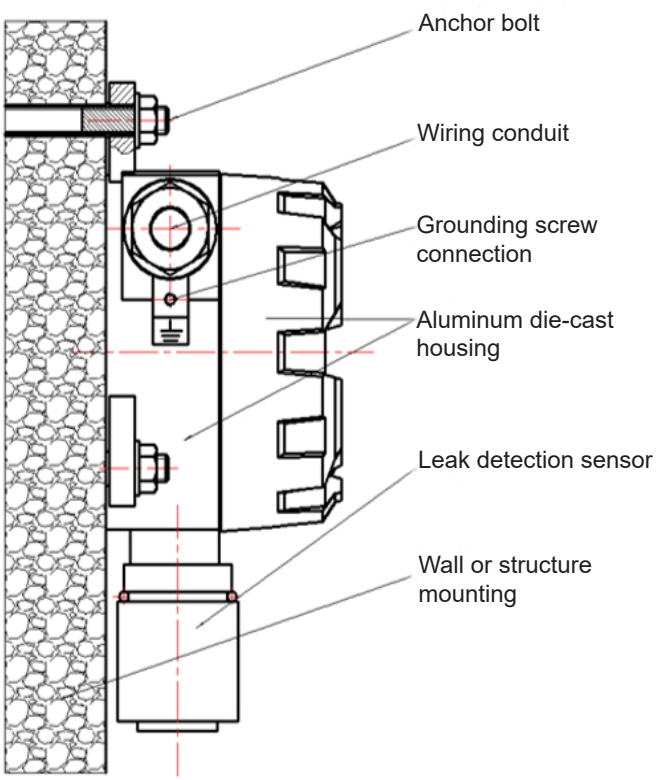

## Installation Information

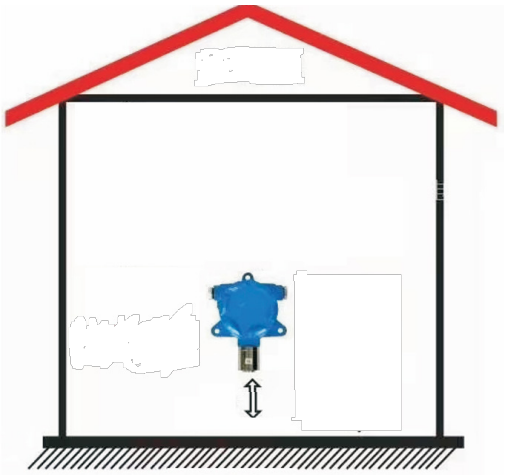

Note 1: The WNO2 sensor must be installed in a vertical position (with the sensor facing downwards)
Note 2: For gases heavier than air, install the WNO2 detector 30 cm / 12” above floor level (on either side of the source to be monitored).

**1.) Installation Location**

- Install within 1–3 metres ( 3.3’) of possible leak source(s), that is, in areas where gas is most likely to leak or accumulate
- Based on the characteristic that NO2 is denser than air, it is recommended to install at a height of 0.3–1 metre (0.98’ to 3.28’) above the floor
- Ensure the installation location has good airflow, avoid equipment with strong electromagnetic interference e.g. motors and capacitors, avoid dust accumulation and select a convenient location for convenient and daily inspection and maintenance

**2.) Installation and Mounting**

- The WNO2 Series can be installed on a wall or pipe using the mounting bracket, ensure the device is securely fastened before operation

**3.) Installation and Mounting**

- Power source: Connect to 24VDC power supply and observe the correct polarity (positive+/negative-)
- 4-20mA output cable: 3-wire configuration — power positive, signal positive, common ground
- RS485 communication cable: Observe bus polarity. Use shielded twisted-pair cable and connect a 120Ω termination resistor at the furthest device on the bus

## Selection Table

**WNO2 Series - Wall Mountable - Nitrogen Dioxide (NO2) Gas DetectorAll In One Air Quality Environmental Sensor**

| Description | Technical parameters | | | |
|---|---|---|---|---|
| Power supply | 24 Vdc | 1 | | |
| Output signal/type & Disolay | 4-20mA output (no display) | | 1 | |
| | RS485 output (no display) | | R | |
| | 4-20mA output, LED display + alarm light | | AED | |
| | 4-20mA output, LCD display + alarm light | | ACD | |
| | RS485 output, LED display + alarm light | | DED | |
| | RS485 output, LCD display + alarm light | | DCD | |
| | Other type | | D | |
| Customization | Special types, labelling etc | | | Z### |

## Additional Notes and Warnings

**Safety Warning:** The WNO2 Series is a safety device and should not replace strict safety operating procedures. Before working in a hazardous area, always use a portable detector for final validation

**Regular Calibration:** To ensure measurement accuracy, it is recommended to perform zero-point and span calibration every 3–6 months. Shorten the calibration interval when used in harsh environments

**Avoid Over-exposure:** Do not expose the sensor to high concentrations of gas or chemicals that may damage the sensor (such as silicates, sulfides, etc.) for extended periods, as this will permanently damage the sensor

**Prevent Blockage:** Do not touch the sensor membrane with sharp or hard objects. Prevent dust and oil from blocking the sensor's air passages

**Power Matching:** Strictly use a 24VDC rated power supply. Overvoltage or reverse connection may cause permanent damage to this device

**Maintenance:** Regularly clean the WNO2 housing and check that the air inlet passages are clean and unobstructed. Do not disassemble the instrument as this will void warranty

**Installation Qualification:** System installation and wiring must be carried out by qualified technical professionals, complying with all local and national electrical safety standards

# WPCM Air Flow and Velocity Transmitter



**Description & Features:**

- WPCM Series is an air velocity transmitter engineered for the building automation and HVAC/R industry
- The WPCM measures air velocity with selectable ranges and various outputs
- Designed with fixed duct mounting or more convenient remount mounting configurations
- Each module is equipped with a housing and duct mounting probe which is available in different lengths
- An adjustable collar is available for various insertion depths and suitable for round or rectangular ducts
- Complete protection against overvoltage, reverse polarity and EMC
- Customization available for dedicated installations and private labelling
- 5 year warranty

**Applications:**

- WPCM is used in the measurement of air velocity in duct and ventilation equipment
- Appropriate for monitoring air and non-combustible gases
- The product is widely used in HVAC control systems of various types in commercial and government buildings as well as manufacturing and processing facilities

| Technical Parameters | |
|---|---|
| **Measurement Range** | 0–10 m/s, 0–15 m/s field-selectable, custom ranges also available |
| **Accuracy** | 0.3 m/s + 2% FS (wind speed >3 m/s), reference 1 m/s = 2.24 mph |
| **Output Signal** | 4/20mA or 0/10V, RS485 |
| **Power Supply** | 12/30VDC, 24VAC ±20% |
| **Long-term Stability** | 1% Full Scale per year |
| **Housing Temp. Range** | -20° to 70°C / -4° to 158°F |
| **Housing Material** | ABS, rated IP54 |
| **Display** | LCD (optional) |
| **Power Consumption** | <1W |
| **Probe Material** | Integrated: Aluminium alloy, Remote: Stainless steel |
| **Insertion Depth** | Integrated: 100 to 210mm (3.94" to 8.27")<br>Remote: 100mm (4"), 150mm (6") or 200mm (8") |
| **Mounting** | Integrated: Screw mount with Housing or Adjustable Collar (Plastic ABS),<br>Remote: Threaded (G1/2" male) or flange mount (DN15, 1/2") |
| **Media Temperature** | Integrated: -20 to 70°C (-4° to 158°F), Remote: -40 to 400°C (-40° to 752°F) |
| **Product Certification** | CE |

## Wiring Instructions

### ANALOG OUTPUT

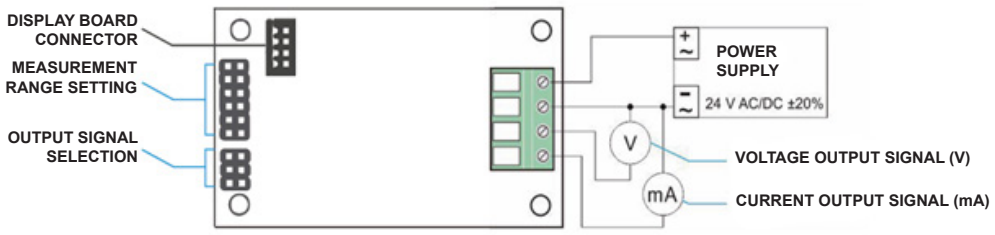


### RS485 COMMUNICATION OUTPUT

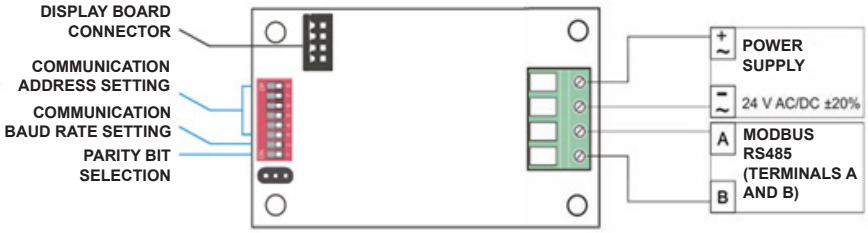


## Dimensions (mm)

INTEGRATED PROBE

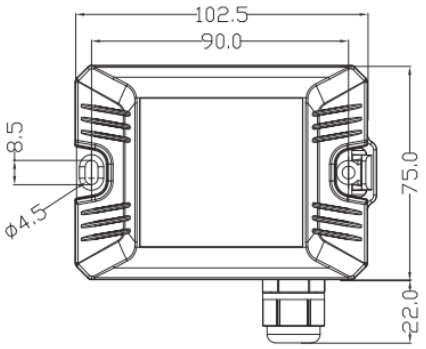


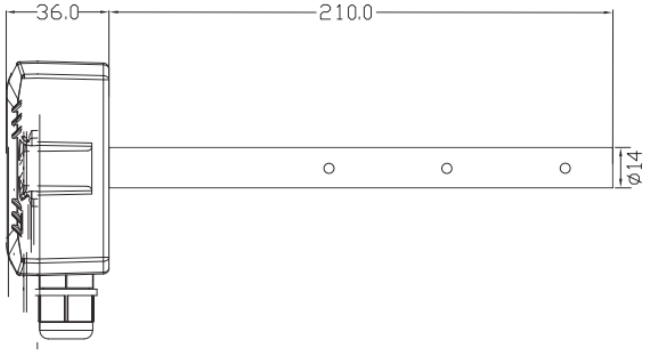


*4.5 mm = 0.177”*
*8.5 mm = 0.335”*
*14 mm = 0.551”*
*22 mm = 0.866”*
*36 mm = 1.417”*
*75 mm = 2.953”*
*90 mm = 3.543”*
*102.5 mm = 4.035”*
*210 mm = 8.268”*

REMOTE MOUNTED SPLIT PROBE

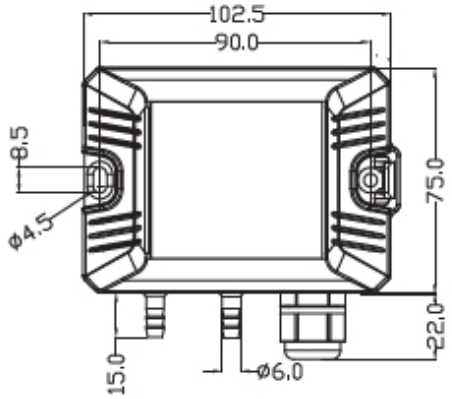




DUCT FLANGE INCLUDED

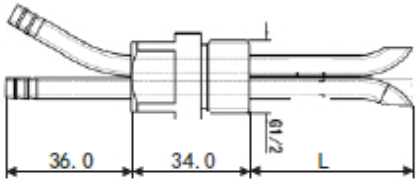


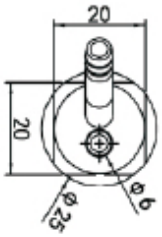


*4.5 mm = 0.177”*
*6 mm = 0.236”*
*8.5 mm = 0.335”*
*15 mm = 0.591”*
*20 mm = 0.787”*
*22 mm = 0.866”*
*25 mm = 0.984”*
*34 mm = 1.339”*
*36 mm = 1.417”*
*75 mm = 2.953”*
*90 mm = 3.543”*
*102.5 mm = 4.035”*

# WPCM | Air Flow and Velocity Transmitter





THREADED CONNECTOR (G 1/2”), ST



FLANGE CONNECTION (DN15, 1/2”), SF



1.5M ((4.9’) CLEAR PLASTIC TUBING INCLUDED

## IMPORTANT NOTES:

1. Measurement accuracy and stability depend on the correct orientation of the sensing probe and the secure mounting of the housing. The probe hole direction must correspond to the airflow direction inside the duct / ventilation chamber. The WPCM Series must be installed in a location which allows airflow to pass for proper sensor measurement.
2. The transmitter must be installed in a straight section of ductwork. Do not install it near bends, throttle valves, or any area that may restrict airflow or generate vibration.
3. It is recommended to use shielded cables for the transmitter wiring, and to avoid running them in parallel with other communication or power cables (in the same conduit), to avoid interference.
4. If this device is not operated in clean environments, the sensing probe will need to be cleaned regularly to reduce any accumulative effects on the measuring accuracy.

## Selection Table

**WCPM Series - Integrated Version - Air Velocity Transmitter for Ducts & Ventillation Systems**

| Description | Technical parameters | | | | | | |
|---|---|---|---|---|---|---|---|
| Power supply | 24 Vac/Vdc | 4 | | | | | |
| Output signal | 4/20 mA, 0/10 V | | 8 | | | | |
| | RS485 | | R | | | | |
| Measuring range | 0–10 m/s, 0–15 m/s field-selectable | | | 1 | | | |
| | Other ranges | | | D | | | |
| Housing and Sensor Mounting Type | Duct Mounting Type with Collar | | | | W1 | | |
| LCD | Without LCD display | | | | | - | |
| | LCD display included | | | | | L | |
| Customization | Special types, labelling etc | | | | | | Z### |

**WCPM Series - Remote Mounted Split Probe - Air Velocity Transmitter for Ducts & Ventillation Systems**

| Description | Technical parameters | | | | | | |
|---|---|---|---|---|---|---|---|
| Power supply | 24 Vac/Vdc | 4 | | | | | |
| Output signal | 4/20 mA, 0/10 V | | 8 | | | | |
| | RS485 | | R | | | | |
| Measuring range | 0–10 m/s, 0–15 m/s field-selectable | | | 1 | | | |
| | Other ranges | | | D | | | |
| Sensor Mounting Type | Threaded connection, G 1/2", 100mm/4" probe length | | | | ST1 | | |
| *(1.5m/4.9' tubing included)* | Threaded connection, G 1/2", 150mm/6" probe length | | | | ST2 | | |
| | Threaded connection, G 1/2", 200mm/8" probe length | | | | ST3 | | |
| | Flanged connection, DN15/0.5", 100mm/4" probe length | | | | SF1 | | |
| | Flanged connection, DN15/0.5", 150mm/6" probe length | | | | SF2 | | |
| | Flanged connection, DN15/0.5", 200mm/8" probe length | | | | SF3 | | |
| LCD | Without LCD display | | | | | - | |
| | LCD display included | | | | | L | |
| Customization | Special types, labelling etc | | | | | | Z### |

# WR Series

# Refrigeration Leak Detector



**Description & Features:**

- The WR Series refrigerant leak detector is a high-performance monitoring device designed for the safety of modern refrigeration and air conditioning systems
- The product provides standard 4-20mA or RS485 signal outputs and can be integrated into various gas alarm systems or PLC/DCS control systems
- Each unit is equipped with a high quality LED display and audible/visual alarm
- The WR Series with a semiconductor metal oxide sensor monitors gas leakages
  - Once the refrigerant gas comes into contact with the sensor surface, it reacts with adsorbed oxygen, causing a change in semiconductor resistance which triggers a signal proportional to the gas concentration
  - The WR Series with the semiconductor sensor is an economical option for the detection of a variety of flammable and volatile organic gases, including refrigerants
- The WR Series with the NDIR Infrared sensor uses the non-dispersive infrared absorption principle
  - The infrared light source inside the sensor emits a specific wavelength which is absorbed by the gas concentration and then calculated by measuring the intensity of light after the absorption
  - The Infrared sensor is highly responsive for specific molecular structures and offers excellent selectivity and high accuracy and is extremely suitable for monitoring critical areas
- Customization available for dedicated installations and private labelling
- 5 year warranty

**Applications:**

- Large refrigeration systems in food processing, cold storage logistics, large central air conditioning mechanical rooms
- Shopping malls and grocery stores with reach-in refrigerators and glass door
- merchandisers
- Critical infrastructure monitoring such as air conditioning systems in data centers, hospitals, and telecommunications rooms
- Industrial & transportation detection for process cooling environments and refrigerated transport vehicles

| Technical Parameters | |
|---|---|
| **Detection** | Semiconductor: R134a, R22, R32, R507 (refrigerant variants)<br>Infrared: CFC (legacy) and Hydrocarbon type refrigerants |
| **Gas Detected** | Semiconductor: Broad-spectrum<br>Infrared: Specific gas detection |
| **Range** | Semiconductor: 0–500 PPM<br>Infrared: 0–1000 PPM |
| **Accuracy** | Semiconductor: ±5% alarm, ±10% FS<br>Infrared: ±3% alarm, ±5% FS |
| **Output** | 4-20mA (3-wire); RS485 (Modbus-RTU) |
| **Power** | DC24V ±15% / <2W |
| **Display** | LED; Resolution 1 PPM |
| **Alarm** | Audible & visual (≥85dB buzzer) |
| **Alarm Points** | 25%FS and 50%FS (two-level) |
| **Response** | T90 ≤30s; Warm-up <100s |
| **Environment** | -10–50°C (14° to 122°F), 15–90%RH, non-condensing |
| **Installation** | Wall-mounted; IP65; Die-cast aluminum |

## Dimensions (mm)

WALL MOUNTED



*15 mm = 0.59”*
*25 mm = 0.98”*
*29 mm = 1.14”*
*48 mm = 1.9”*
*60 mm = 2.4”*
*85 mm = 3.3”*
*88 mm = 3.5”*
*115 mm = 4.5”*
*120 mm = 4.7”*
*140 mm = 5.5”*

## Installation Information

**1. Installation Location**

- Install close to the leak source, such as below or above compressors, valves, fittings, flanges and pipe connections
- The installation height guidelines are determined by the density of the refrigerant
- If the refrigerant density is greater than air e.g. R134a, then install the WR Series 0.3–0.6 metres (0.98’ to 3.28’) above floor level
- If the refrigerant density is less than air e.g. R32, then install the WR Series 0.3–0.6 metres (0.98’ to 3.28’) below the ceiling above the leak source

**2. Installation**

- Avoid installing the WR Series near ventilation outlets, corners or vibrating equipment to ensure detection effectiveness and extend sensor life
- The WR Series can be installed on a wall, ensure the device is securely fastened before operation

**3. Wiring Instructions**

- Power source: Connect to 24VDC power supply and observe the correct polarity (positive+/negative-)
- 4-20mA output cable: 3-wire configuration - power positive, signal positive, common ground
- RS485 communication cable: Observe bus polarity. Use shielded twisted-pair cable and connect a 120Ω termination resistor at the furthest device on the bus

## Accessories



*Mounting Bracket, WRM42*




*Remote Control, WRPJRC*

## Selection Table

**WR Series - Wall Mountable - Refrigerant Leak Detection Sensor**

| Description | Technical parameters | | | |
|---|---|---|---|---|
| Measurement, Output signal & Display | 0-500 ppm, 4-20mA output and LED display | | EFA | |
| | 0-500 ppm, RS485 output and LED display | | EFD | |
| | 0-1,000 ppm, 4-20mA output and LED display * | | ###A | |
| | 0-1,000 ppm, RS485 output and LED display * | | ###D | |
| | * ### = specify refrigerant R134A, R22, R32 or R507 (specify refrigerant) | | | |
| | Other | | D | |
| Customization | Special types, labelling etc | | | Z### |

# LMF11 Electromagnetic Flow Meter




**Description & Features:**

- Rugged electromagnetic flow meter designed on Faraday's principle
- Used to directly measure the flow rate of conductive liquids
- Analog and Digital communications outputs including switch output
- ANSI and EN flange connections available
- Integrated and Remote transmitters options
- High level of IP protection including continuous immersion
- One-way and bi-directional / reverse flow achieveable
- 5 year warranty

**Applications:**

- Ideal for commercial and general purpose installations including ground water, chilled-water systems, irrigation, boiler system water circulation, wastewater treatment, and much more

| Technical Parameters | |
|---|---|
| **Power Supply** | 86~250 VAC, 45~63Hz ≤ 20W, 18~36VDC |
| **Output Communication** | 4-20 mA / pulse / SPST, HART® / Modbus |
| **Accuracy** | ±0.5%, ±0.3%, ±0.2% |
| **Repeatability** | ±0.16%, ±0.1%, ±0.06% |
| **Medium Temperature** | -25 to 200°C (-13 to 392°F) |
| **Conductivity** | ≥5 μS/cm, ≥12.7μS/inch |
| **Calibration Range** | DN6-DN1600 (1/8"-64") |
| **Operating Pressure** | 0.6Mpa/1.0Mpa/1.6Mpa/2.5Mpa/4.0Mpa, (87/145/232/363/580 psi) others |
| **Flow Rate** | 0.5-10 m/s (1.64 to 32.81 ft/s) |
| **Electrode Material** | 316L/Hastelloy B/ Hastelloy C/ Titanium/ Tantalum and others |
| **Lining Material** | Rubber / PTFE / PFA and others |
| **Measurement Tube Material** | 304 SS |
| **Flange Material** | Carbon steel/stainless steel |
| **Ingress Protection** | IP 65/67/68 (Remote Type) |
| **Electrical Connection** | M20X 1.5, 1/2- 14NPT |
| **Structural Form** | Integrated / Remote Type |
| **Working Environment** | Environmental temperature -25~60°C (-13 to 140°F), humidity 5%~90% |
| **Language** | English, Spanish, Chinese and others |

## DN15-DN150 Product Parameters

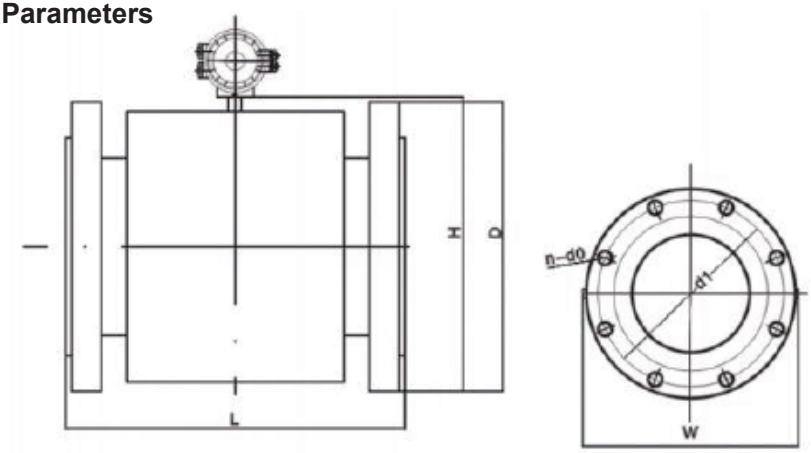


DN15~DN150 (NPS 1/2”~6”), 1.6 MPa (232 psi), 4.0 MPa (580 psi) integrated and split sensors, body shape diagram

### Dimensions and Weight

| Nominal Diameter (DN) | L | W | H | Reference Weight (kg) | |
|---|---|---|---|---|---|
| | | | | Integrated | Sensor |
| 15 | 200 | 140 | 147 | 10 | 7 |
| 20 | 200 | 140 | 154 | 12 | 9 |
| 25 | 200 | 140 | 156 | 14 | 11 |
| 32 | 200 | 168 | 166 | 15 | 12 |
| 40 | 200 | 176 | 172 | 16 | 13 |
| 50 | 200 | 176 | 191 | 17 | 14 |
| 65 | 250 | 214 | 200 | 25 | 22 |
| 80 | 250 | 214 | 218 | 29 | 26 |
| 100 | 250 | 230 | 242 | 31 | 28 |
| 125 | 250 | 281 | 277 | 36 | 33 |
| 150 | 300 | 281 | 302 | 41 | 38 |

### Flange Size (Standard: GB/T9119)

| Nominal Diameter (DN) | Pressure 1.6MPa | | | | | Pressure 4.0MPa | | | | |
|---|---|---|---|---|---|---|---|---|---|---|
| | D | d1 | d0 | n | b | D | d1 | d0 | n | b |
| 15 | 95 | 65 | 14 | 4 | 16 | 95 | 65 | 14 | 4 | 16 |
| 20 | 105 | 75 | 14 | 4 | 18 | 105 | 75 | 14 | 4 | 18 |
| 25 | 115 | 85 | 14 | 4 | 18 | 115 | 85 | 14 | 4 | 18 |
| 32 | 140 | 100 | 18 | 4 | 18 | 140 | 100 | 18 | 4 | 18 |
| 40 | 150 | 110 | 18 | 4 | 20 | 150 | 110 | 18 | 4 | 20 |
| 50 | 165 | 125 | 18 | 4 | 20 | 165 | 125 | 18 | 4 | 20 |
| 65 | 185 | 145 | 18 | 4 | 20 | 185 | 145 | 18 | 4 | 22 |
| 80 | 200 | 160 | 18 | 8 | 22 | 200 | 160 | 18 | 8 | 22 |
| 100 | 220 | 180 | 18 | 8 | 22 | 235 | 190 | 22 | 8 | 26 |
| 125 | 250 | 210 | 18 | 8 | 22 | 270 | 220 | 26 | 8 | 26 |
| 150 | 285 | 240 | 22 | 8 | 24 | 300 | 250 | 26 | 8 | 28 |

| Nominal Diameter (NPS) | L(n) | W(in) | H(in) | Reference Weight (kg) | |
|---|---|---|---|---|---|
| | | | | Integrated | Sensor |
| 1/2” | 7.87 | 5.51 | 5.79 | 22.0 | 15.4 |
| 3/4” | 7.87 | 5.51 | 6.06 | 26.5 | 19.8 |
| 1” | 7.87 | 5.51 | 6.14 | 30.9 | 24.3 |
| 1-1/4” | 7.87 | 6.61 | 6.54 | 33.1 | 26.5 |
| 1-1/2” | 7.87 | 6.93 | 6.77 | 35.3 | 28.7 |
| 2” | 7.87 | 6.93 | 7.52 | 37.5 | 30.9 |
| 2-1/2” | 9.84 | 8.43 | 7.87 | 55.1 | 48.5 |
| 3” | 9.84 | 8.43 | 8.58 | 63.9 | 57.3 |
| 4” | 9.84 | 9.06 | 9.53 | 68.3 | 61.7 |
| 5” | 9.84 | 11.06 | 10.91 | 79.4 | 72.8 |
| 6” | 11.81 | 11.06 | 11 .89 | 90.4 | 83.8 |

| Nominal Diameter (NPS) | Pressure 232psi | | | | | Pressure 580psi | | | | |
|---|---|---|---|---|---|---|---|---|---|---|
| | D | d1 | d0 | n | b | D | d1 | d0 | n | b |
| 1/2” | 3.74 | 2.56 | 0.55 | 0.16 | 0.63 | 3.74 | 2.56 | 0.55 | 0.16 | 0.63 |
| 3/4” | 4.13 | 2.95 | 0.55 | 0.16 | 0.71 | 4.13 | 2.95 | 0.55 | 0.16 | 0.71 |
| 1” | 4.53 | 3.35 | 0.55 | 0.16 | 0.71 | 4.53 | 3.35 | 0.55 | 0.16 | 0.71 |
| 1-1/4” | 5.51 | 3.94 | 0.71 | 0.16 | 0.71 | 5.51 | 3.94 | 0.71 | 0.16 | 0.71 |
| 1-1/2” | 5.91 | 4.33 | 0.71 | 0.16 | 0.79 | 5.91 | 4.33 | 0.71 | 0.16 | 0.79 |
| 2” | 6.50 | 4.92 | 0.71 | 0.16 | 0.79 | 6.50 | 4.92 | 0.71 | 0.16 | 0.79 |
| 65 | 7.28 | 5.71 | 0.71 | 0.16 | 0.79 | 7.28 | 5.71 | 0.71 | 0.16 | 0.87 |
| 80 | 7.87 | 6.30 | 0.71 | 0.31 | 0.87 | 7.87 | 6.30 | 0.71 | 0.31 | 0.87 |
| 100 | 8.66 | 7.09 | 0.71 | 0.31 | 0.87 | 9.25 | 7.48 | 0.87 | 0.31 | 1.02 |
| 125 | 9.84 | 8.27 | 0.71 | 0.31 | 0.87 | 10.63 | 8.66 | 1.02 | 0.31 | 1.02 |
| 150 | 11.22 | 9.45 | 0.87 | 0.31 | 0.94 | 11.81 | 9.84 | 1.02 | 0.31 | 1.10 |

## DN200-D600 Product Parameters

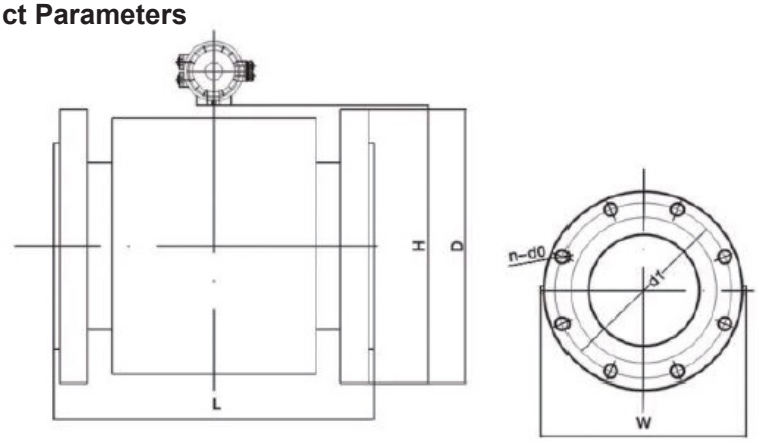


DN200~DN600 (NPS 8”~24”), 1.0 MPa (145 psi), 1.6 MPa (232 psi) integrated and split sensors, body shape diagram

### Dimensions and Weight

| Nominal Diameter (DN) | L | H | Reference Weight (kg) |
|---|---|---|---|
| 200 | 350 | 382 | 45 |
| 250 | 450 | 412 | 50 |
| 300 | 500 | 472 | 60 |
| 350 | 500 | 522 | 145 |
| 400 | 500 | 572 | 180 |
| 450 | 550 | 626 | 215 |
| 500 | 550 | 676 | 245 |
| 600 | 600 | 776 | 335 |

### Flange Size (Standard: GB/T9119)

| Nominal Diameter (DN) | Pressure 1.6MPa | | | | | Pressure 4.0MPa | | | | |
|---|---|---|---|---|---|---|---|---|---|---|
| | D | d1 | d0 | n | b | D | d1 | d0 | n | b |
| 200 | 340 | 295 | 22 | 12 | 26 | 340 | 295 | 22 | 8 | 24 |
| 250 | 405 | 355 | 26 | 12 | 28 | 395 | 350 | 22 | 12 | 26 |
| 300 | 460 | 410 | 26 | 12 | 32 | 445 | 400 | 22 | 12 | 28 |
| 350 | 520 | 470 | 26 | 16 | 35 | 505 | 460 | 22 | 16 | 30 |
| 400 | 580 | 525 | 30 | 16 | 38 | 565 | 515 | 26 | 16 | 32 |
| 450 | 640 | 585 | 30 | 20 | 42 | 615 | 565 | 26 | 20 | 35 |
| 500 | 715 | 650 | 33 | 20 | 46 | 670 | 620 | 26 | 20 | 38 |
| 600 | 840 | 770 | 36 | 20 | 52 | 780 | 725 | 30 | 20 | 42 |

| Nominal Diameter (NPS) | L(n) | H(in) | Reference Weight (kg) |
|---|---|---|---|
| 8" | 13.78 | 14.25 | 99 |
| 10" | 17.72 | 16.22 | 110 |
| 12" | 19.69 | 18.58 | 132 |
| 14" | 19.69 | 20.55 | 320 |
| 16" | 19.69 | 22.52 | 397 |
| 18" | 21.65 | 24.65 | 474 |
| 20" | 21.65 | 26.61 | 540 |
| 24" | 23.62 | 30.55 | 739 |

| Nominal Diameter (NPS) | Pressure 232psi | | | | | Pressure 580psi | | | | |
|---|---|---|---|---|---|---|---|---|---|---|
| | D | d1 | d0 | n | b | D | d1 | d0 | n | b |
| 8" | 13.39 | 11.61 | 0.87 | 0.47 | 1.02 | 13.39 | 11.61 | 0.87 | 0.31 | 0.94 |
| 10" | 15.94 | 13.98 | 1.02 | 0.47 | 1.10 | 15.55 | 13.78 | 0.87 | 0.47 | 1.02 |
| 12" | 18.11 | 16.14 | 1.02 | 0.47 | 1.26 | 17.52 | 15.75 | 0.87 | 0.47 | 1.10 |
| 14" | 20.47 | 18.50 | 1.02 | 0.63 | 1.38 | 19.88 | 18.11 | 0.87 | 0.63 | 1.18 |
| 16" | 22.83 | 20.67 | 1.18 | 0.63 | 1.50 | 22.24 | 20.28 | 1.02 | 0.63 | 1.26 |
| 18" | 25.20 | 23.03 | 1.18 | 0.79 | 1.65 | 24.21 | 22.24 | 1.02 | 0.79 | 1.38 |
| 20" | 28.15 | 25.59 | 1.30 | 0.79 | 1.81 | 26.38 | 24.41 | 1.02 | 0.79 | 1.50 |
| 24" | 33.07 | 30.31 | 1.42 | 0.79 | 2.05 | 30.71 | 28.54 | 1.18 | 0.79 | 1.65 |

## DN700-DN3000 Product Parameters

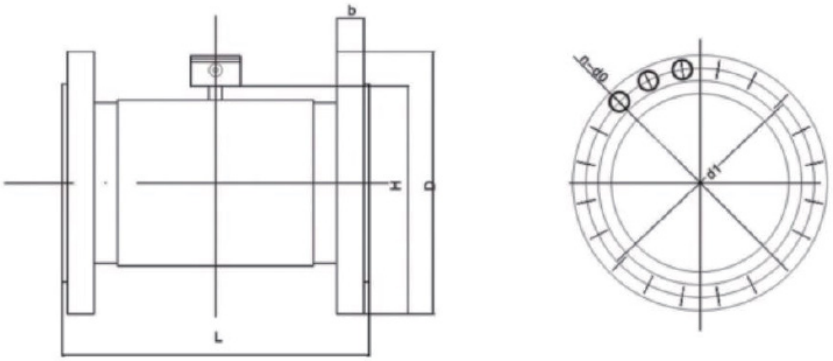


**Note:** 1. DN700~DN3000 do not have an integrated type;
2. The appearance of the DN700~DN1600 explosion-proof sensor is the same as that of a normal instrument.

### Dimensions and Weight

| Nominal Diameter (DN) | L | H φ - | Reference Weight (kg) |
|---|---|---|---|
| 700 | 700 | 866 | 435 |
| 800 | 800 | 966 | 545 |
| 800 | 800 | 1076 | 655 |
| 1000 | 1000 | 1200 | 810 |
| 1200 | 1200 | 1406 | 875 |
| 1400 | 1400 | 1632 | 1235 |
| 1600 | 1600 | 1832 | 1555 |
| 1800 | 1800 | 2036 | 2085 |
| 2000 | 2000 | 2236 | 2610 |
| 2200 | 2200 | 2436 | 3210 |
| 2400 | 2400 | 2636 | 3910 |
| 2600 | 2600 | 2836 | 4280 |
| 2800 | 2800 | 3036 | 5000 |
| 3000 | 3000 | 3236 | |

### Flange Size (Standard: GB/T9119)

| Nominal Diameter (DN) | Pressure (MPA) | D | d1 | d0 | n | b |
|---|---|---|---|---|---|---|
| 700 | 1.0 | 895 | 840 | 30 | 24 | 30 |
| 800 | | 1015 | 950 | 33 | 24 | 32 |
| 900 | | 1115 | 1050 | 33 | 28 | 34 |
| 1000 | | 1230 | 1160 | 36 | 28 | 34 |
| 700 | 6.0 | 860 | 810 | 26 | 24 | 26 |
| 800 | | 975 | 920 | 30 | 24 | 26 |
| 900 | | 1075 | 1020 | 30 | 24 | 26 |
| 1000 | | 1175 | 1120 | 30 | 28 | 26 |
| 1200 | | 1405 | 1340 | 33 | 32 | 28 |
| 1400 | | 1630 | 1560 | 36 | 36 | 32 |
| 1600 | | 1830 | 1760 | 36 | 40 | 34 |
| 1800 | | 2045 | 1970 | 39 | 44 | 36 |
| 2000 | | 2265 | 2180 | 42 | 48 | 38 |
| 2200 | | 2475 | 2390 | 42 | 52 | 42 |
| 2400 | | 2685 | 2600 | 42 | 56 | 44 |
| 2600 | | 2905 | 2810 | 48 | 60 | 46 |
| 2800 | | 3115 | 3020 | 48 | 64 | 48 |
| 3000 | | 3315 | 3220 | 48 | 68 | 50 |

## DN700 Product Parameters (Continued)

### Dimensions and Weight

| Nominal Diameter (NPS) | L | H φ - | Reference Weight (kg) |
|---|---|---|---|
| 28" | 27.56 | 34.09 | 959 |
| 32" | 31.50 | 38.03 | 1202 |
| 32" | 31.50 | 42.36 | 1444 |
| 40" | 39.37 | 47.24 | 1786 |
| 48" | 47.24 | 55.35 | 1929 |
| 56" | 55.12 | 64.25 | 2723 |
| 64" | 62.99 | 72.13 | 3428 |
| 72" | 70.87 | 80.16 | 4597 |
| 80" | 78.74 | 88.03 | 5754 |
| 88" | 86.61 | 95.91 | 7077 |
| 96" | 94.49 | 103.78 | 8620 |
| 104" | 102.36 | 111.65 | 9436 |
| 112" | 110.24 | 119.53 | 11023 |
| 120" | 118.11 | 127.40 | 0 |

### Flange Size (Standard: GB/T9119)

| Nominal Diameter (NPS) | Pressure (PSI) | D | d1 | d0 | n | b |
|---|---|---|---|---|---|---|
| 28" | 145.0 | 35.24 | 33.07 | 1.18 | 0.94 | 1.18 |
| 32" | | 39.96 | 37.40 | 1.30 | 0.94 | 1.26 |
| 36" | | 43.90 | 41.34 | 1.30 | 1.10 | 1.34 |
| 40" | | 48.43 | 45.67 | 1.42 | 1.10 | 1.34 |
| 28" | 87.0 | 33.86 | 31.89 | 1.02 | 0.94 | 1.02 |
| 32" | | 38.39 | 36.22 | 1.18 | 0.94 | 1.02 |
| 36" | | 42.32 | 40.16 | 1.18 | 0.94 | 1.02 |
| 40" | | 46.26 | 44.09 | 1.18 | 1.10 | 1.02 |
| 48" | | 55.31 | 52.76 | 1.30 | 1.26 | 1.10 |
| 56" | | 64.17 | 61.42 | 1.42 | 1.42 | 1.26 |
| 64" | | 72.05 | 69.29 | 1.42 | 1.57 | 1.34 |
| 72" | | 80.51 | 77.56 | 1.54 | 1.73 | 1.42 |
| 80" | | 89.17 | 85.83 | 1.65 | 1.89 | 1.50 |
| 88" | | 97.44 | 94.09 | 1.65 | 2.05 | 1.65 |
| 96" | | 105.71 | 102.36 | 1.65 | 2.20 | 1.73 |
| 104" | | 114.37 | 110.63 | 1.89 | 2.36 | 1.81 |
| 112" | | 122.64 | 118.90 | 1.89 | 2.52 | 1.89 |
| 120" | | 130.51 | 126.77 | 1.89 | 2.68 | 1.97 |

## Engineering Codes

| LMF11 GENERAL APPLICATION FLOWMETER, ENGINEERED PART NUMBER (ASME FLANGE SIZES) | | L M F 1 1 - | - | - |

## Engineering Codes (Continued)

| LMF11 GENERAL APPLICATION FLOWMETER, ENGINEERED PART NUMBER (EN FLANGE SIZES) | | L M F 1 1 - | | | - | | - | | - | | - | | | | - | | - | | - | | - | | | | - | | - | | | | |
|---|---|---|---|---|---|---|---|---|---|---|---|---|---|---|---|---|---|---|---|---|---|---|---|---|---|---|---|---|---|---|
| **OUTPUT & COMMUNICATION TYPES** | 4/20MA + PULSE | | | 0 | 1 | | | | | | | | | | | | | | | | | | | | | | | | | |
| | 4/20MA + SPST SWITCH | | | 0 | 5 | | | | | | | | | | | | | | | | | | | | | | | | | |
| | 4/20MA + HART 7 | | | 0 | 2 | | | | | | | | | | | | | | | | | | | | | | | | | |
| | MODBUS (RS485) | | | 0 | 3 | | | | | | | | | | | | | | | | | | | | | | | | | |
| | PROFIBUS PA | | | 0 | 4 | | | | | | | | | | | | | | | | | | | | | | | | | |
| **POWER SUPPLY** | 100~220VAC | | | | | G | | | | | | | | | | | | | | | | | | | | | | | | |
| | 24VDC | | | | | K | | | | | | | | | | | | | | | | | | | | | | | | |
| **ACCURACY** | 0.5% STANDARD | | | | | | A | | | | | | | | | | | | | | | | | | | | | | | |
| | 0.3% HIGHER ACCURACY | | | | | | B | | | | | | | | | | | | | | | | | | | | | | | |
| | 0.2% HIGHEST ACCURACY | | | | | | C | | | | | | | | | | | | | | | | | | | | | | | |
| **NOMINAL PRESSURE** | PN6 | | | | | | | B | | | | | | | | | | | | | | | | | | | | | | |
| | PN10 | | | | | | | C | | | | | | | | | | | | | | | | | | | | | | |
| | PN16 | | | | | | | D | | | | | | | | | | | | | | | | | | | | | | |
| | PN40 | | | | | | | F | | | | | | | | | | | | | | | | | | | | | | |
| | OTHER, SPECIFY | | | | | | | ? | | | | | | | | | | | | | | | | | | | | | | |
| **PROCESS CONNECTION STANDARD (FLANGE CONNECTION)** | CARBON STEEL | | | | | | | | 1 | | | | | | | | | | | | | | | | | | | | | |
| **FLANGE & BODY MATERIAL** | 304SS | | | | | | | | 2 | | | | | | | | | | | | | | | | | | | | | |
| | 316SS | | | | | | | | 3 | | | | | | | | | | | | | | | | | | | | | |
| | 316 L | | | | | | | | 4 | | | | | | | | | | | | | | | | | | | | | |
| | OTHER MATERIAL, SPECIFY | | | | | | | | ? | | | | | | | | | | | | | | | | | | | | | |
| **PROCESS CONNECTION STANDARD (FLANGE CONNECTION)** | DN6 UP TO 4.0 MPA RATED | | | | | | | | | A | 0 | 6 | | | | | | | | | | | | | | | | | | |
| | DN10 UP TO 4.0 MPA RATED | | | | | | | | | A | 1 | 0 | | | | | | | | | | | | | | | | | | |
| | DN15 UP TO 4.0 MPA RATED | | | | | | | | | A | 1 | 5 | | | | | | | | | | | | | | | | | | |
| | DN20 UP TO 4.0 MPA RATED | | | | | | | | | A | 2 | 0 | | | | | | | | | | | | | | | | | | |
| | DN25 UP TO 4.0 MPA RATED | | | | | | | | | A | 2 | 5 | | | | | | | | | | | | | | | | | | |
| | DN32 UP TO 4.0 MPA RATED | | | | | | | | | A | 3 | 2 | | | | | | | | | | | | | | | | | | |
| | DN40 UP TO 4.0 MPA RATED | | | | | | | | | A | 4 | 0 | | | | | | | | | | | | | | | | | | |
| | DN50 UP TO 4.0 MPA RATED | | | | | | | | | A | 5 | 0 | | | | | | | | | | | | | | | | | | |
| | DN65 UP TO 1.6 MPA RATED | | | | | | | | | A | 6 | 5 | | | | | | | | | | | | | | | | | | |
| | DN80 UP TO 1.6 MPA RATED | | | | | | | | | A | 8 | 0 | | | | | | | | | | | | | | | | | | |
| | DN100 UP TO 1.6 MPA RATED | | | | | | | | | A | 1 | H | | | | | | | | | | | | | | | | | | |
| | DN125 UP TO 1.6 MPA RATED | | | | | | | | | A | 1 | Q | | | | | | | | | | | | | | | | | | |
| | DN150 UP TO 1.6 MPA RATED | | | | | | | | | A | 1 | F | | | | | | | | | | | | | | | | | | |
| | DN200 UP TO 1.6 MPA RATED | | | | | | | | | A | 2 | H | | | | | | | | | | | | | | | | | | |
| | DN250 UP TO 1.6 MPA RATED | | | | | | | | | A | 2 | F | | | | | | | | | | | | | | | | | | |
| | DN300 UP TO 1.6 MPA RATED | | | | | | | | | A | 3 | H | | | | | | | | | | | | | | | | | | |
| | DN350 UP TO 1.0 MPA RATED | | | | | | | | | A | 3 | F | | | | | | | | | | | | | | | | | | |
| | DN400 UP TO 1.0 MPA RATED | | | | | | | | | A | 4 | H | | | | | | | | | | | | | | | | | | |
| | DN450 UP TO 1.0 MPA RATED | | | | | | | | | A | 4 | F | | | | | | | | | | | | | | | | | | |
| | DN500 UP TO 1.0 MPA RATED | | | | | | | | | A | 5 | H | | | | | | | | | | | | | | | | | | |
| | DN600 UP TO 1.0 MPA RATED | | | | | | | | | A | 6 | H | | | | | | | | | | | | | | | | | | |
| | DN700 UP TO 1.0 MPA RATED | | | | | | | | | A | 7 | H | | | | | | | | | | | | | | | | | | |
| | DN800 UP TO 1.0 MPA RATED | | | | | | | | | A | 8 | H | | | | | | | | | | | | | | | | | | |
| | DN900 UP TO 1.0 MPA RATED | | | | | | | | | A | 9 | H | | | | | | | | | | | | | | | | | | |
| | DN1000 UP TO 1.0 MPA RATED | | | | | | | | | A | 1 | T | | | | | | | | | | | | | | | | | | |
| | DN1200 UP TO 0.6 MPA RATED | | | | | | | | | A | 2 | M | | | | | | | | | | | | | | | | | | |
| | DN1400 UP TO 0.6 MPA RATED | | | | | | | | | A | 4 | M | | | | | | | | | | | | | | | | | | |
| | DN1600 UP TO 0.6 MPA RATED | | | | | | | | | A | 6 | M | | | | | | | | | | | | | | | | | | |
| **LINER MATERIAL** | RUBBER (-10~80°C / 14 to 176°F) | | | | | | | | | | | | H | | | | | | | | | | | | | | | | | |
| | PTFE (-10~120°C / 14 to 248°F) | | | | | | | | | | | | T | | | | | | | | | | | | | | | | | |
| | PFA (-10~150°C / 14 to 302°F) | | | | | | | | | | | | P | | | | | | | | | | | | | | | | | |
| | OTHER MATERIAL, SPECIFY | | | | | | | | | | | | ? | | | | | | | | | | | | | | | | | |
| **ELECTRODE MATERIAL** | 316 L | | | | | | | | | | | | | E | | | | | | | | | | | | | | | | |
| | HASTELLOY B | | | | | | | | | | | | | N | | | | | | | | | | | | | | | | |
| | HASTELLOY C | | | | | | | | | | | | | O | | | | | | | | | | | | | | | | |
| | TITANIUM | | | | | | | | | | | | | I | | | | | | | | | | | | | | | | |
| | TANTALUM | | | | | | | | | | | | | Q | | | | | | | | | | | | | | | | |
| | OTHER MATERIAL, SPECIFY | | | | | | | | | | | | | ? | | | | | | | | | | | | | | | | |
| **TRANSMITTER MOUNT** | INTEGRATED | | | | | | | | | | | | | | T | | | | | | | | | | | | | | | |
| | REMOTELY MOUNTED, INCLUDES 5M/16FT CABLE | | | | | | | | | | | | | | R | | | | | | | | | | | | | | | |
| **INGRESS PROTECTION** | IP65 (INTEGRATED TYPE) | | | | | | | | | | | | | | | 0 | | | | | | | | | | | | | | |
| | IP67 | | | | | | | | | | | | | | | 1 | | | | | | | | | | | | | | |
| | IP68 (WINTERS QUOTE IF SUBMERSION >6'/2M) | | | | | | | | | | | | | | | 2 | | | | | | | | | | | | | | |
| **ELECTRICAL CONNECTION** | 1/2" NPT FEMALE | | | | | | | | | | | | | | | | 1 | | | | | | | | | | | | | |
| | M20 * 1.5 | | | | | | | | | | | | | | | | 0 | | | | | | | | | | | | | |
| **CABLE LENGTH** | 16' / 5M | | | | | | | | | | | | | | | | | 0 | 5 | | | | | | | | | | | |
| | 33' / 10M | | | | | | | | | | | | | | | | | 1 | 0 | | | | | | | | | | | |
| | 49' / 15M | | | | | | | | | | | | | | | | | 1 | 5 | | | | | | | | | | | |
| | 66' / 20M | | | | | | | | | | | | | | | | | 2 | 0 | | | | | | | | | | | |
| | 82' / 25M | | | | | | | | | | | | | | | | | 2 | 5 | | | | | | | | | | | |
| | OTHER LENGTH, SPECIFY | | | | | | | | | | | | | | | | | ? | ? | | | | | | | | | | | |
| **MEASUREMENT TYPE** | METRIC MEASUREMENTS - L/h, L/m, L/s, m³/h, m³/m, m³/s, | | | | | | | | | | | | | | | | | | | A | | | | | | | | | | |
| | IMPERIAL MEASUREMENTS - GPH, GPM, GPS, ft³/m, ft³/m, ft³/s | | | | | | | | | | | | | | | | | | | B | | | | | | | | | | |
| | OTHER MEASUREMENT TYPE, SPECIFY | | | | | | | | | | | | | | | | | | | ? | | | | | | | | | | |
| **LANGUAGES** | ENGLISH | | | | | | | | | | | | | | | | | | | | 1 | | | | | | | | | |
| | SPANISH | | | | | | | | | | | | | | | | | | | | 2 | | | | | | | | | |
| | FRENCH | | | | | | | | | | | | | | | | | | | | 3 | | | | | | | | | |
| | CHINESE | | | | | | | | | | | | | | | | | | | | 4 | | | | | | | | | |
| | OTHER LANGUAGE, SPECIFY | | | | | | | | | | | | | | | | | | | | ? | | | | | | | | | |
| **SPECIAL SELECTION** | GROUNDING RING 304SS | | | | | | | | | | | | | | | | | | | | | B | | | | | | | | |
| | GROUNDING RING 316SS | | | | | | | | | | | | | | | | | | | | | C | | | | | | | | |
| | COMPANION FLANGE CARBON STEEL | | | | | | | | | | | | | | | | | | | | | 1 | | | | | | | | |
| | SPECIAL | | | | | | | | | | | | | | | | | | | | | Z | # | # | # | | | | | |

# LMF21 Electromagnetic Flow Meter




**Description & Features:**

- Rugged electromagnetic flow meter designed on Faraday's principle
- Used to directly measure the flow rate of conductive liquids
- Analog and Digital communications outputs including switch output
- ANSI and EN flange connections available
- Integrated and Remote transmitters options
- Measurement readings not affected by temperature extremes or density
- Standard Electrical & Safe Drinking Water approvals pending
- 5 year warranty

**Applications:**

- Ideal for commercial and general purpose installations including ground water, potable water distribution, irrigation, waste water treatment, tailing ponds and much more

| Technical Parameters | |
|---|---|
| **Power Supply** | 100~220Vac, 50/60Hz or 20~28Vdc |
| **Output Signal** | 4/20mA<br>Pulse Output<br>RS485 Modbus-RTU protocol<br>HART 7<br>SPST |
| **Accuracy** | +/-0.5%, +/- 0.3% option available<br>0.16% reapeatability |
| **Nominal Diameter** | 3/8" to 40" (DN10 to DN1000) |
| **Pressure Ratings** | 3/8"~10" / DN10~DN250 <232 psi / 1.6MPa<br>12"~40" / DN300~DN1000 <145 psi / 1.0MPa |
| **Process Connection** | ANSI B16.5, EN 1092-1 |
| **Body & Process Materials** | Carbon Steel, 304SS others available |
| **Electrode Material** | 316 L, Hastelloy B or C, Titanium and Tantalum |
| **Lining** | PTFE, Rubber, PFA and others |
| **Flow Rate** | 0.5~5m/s (1.64 to 16.4 ft/s) |
| **IP Rating** | IP65, 66/67 and 68 (remote option) |
| **Allowable Temperature** | Ambient Integrated Electronics @ −10°C to 55°C / 14°F to 131°F<br>Ambient Remote Mounted Electronics @ −20°C to 60°C / −4°F to 140°F<br>Storage @ −20°C to 55°C / −4°F to 131°F |
| **Conductivity** | ≥50µS/cm (≥127µS/inch) |
| **Languages** | English, Spanish, French, Chinese others available |
| **Approvals** | UL 61010-1 for electrical equipment used for measurement, control, and laboratory applications (pending)<br>NSF 61 for Drinking Water System Components (pending) |

## Wiring Terminals

### *Integrated Type*

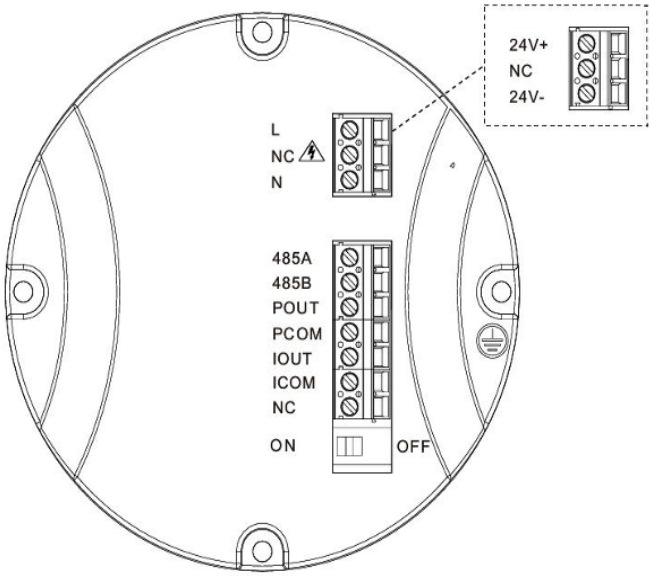


| Terminal | Description |
|---|---|
| L N | 220V AC power supply |
| 24V+ 24V- | 24V DC power supply |
| 485A 485B | RS485 serial communication |
| IOUT ICOM | (4~20)mA output |
| POUT PCOM | Pulse output |
| ⏚ | Converter instrument protection grounding |

### *Remote Type*

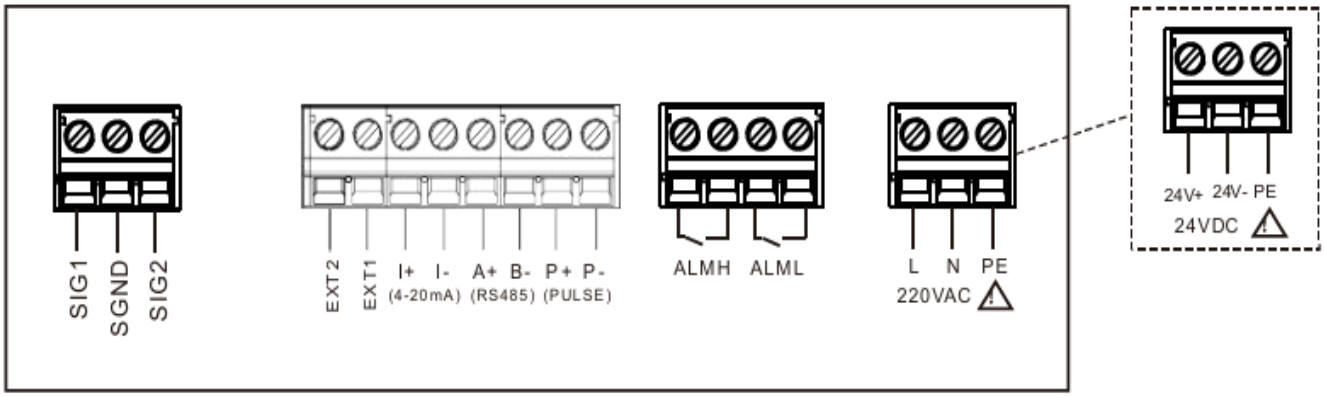


| Terminal | Description |
|---|---|
| SIG1 SIG2 SGND | Sensor signal |
| EXT1 EXT2 | Excitation signal |
| I+ I- | (4~20)mA output |
| A+ B- | RS485 serial communication |
| P+ P- | Pulse output |
| ALMH ALML | Relay output （Optional） |
| L N | 220V AC power supply |
| 24V+ 24V- | 24V DC power supply |
| PE | Ground |

### Installation

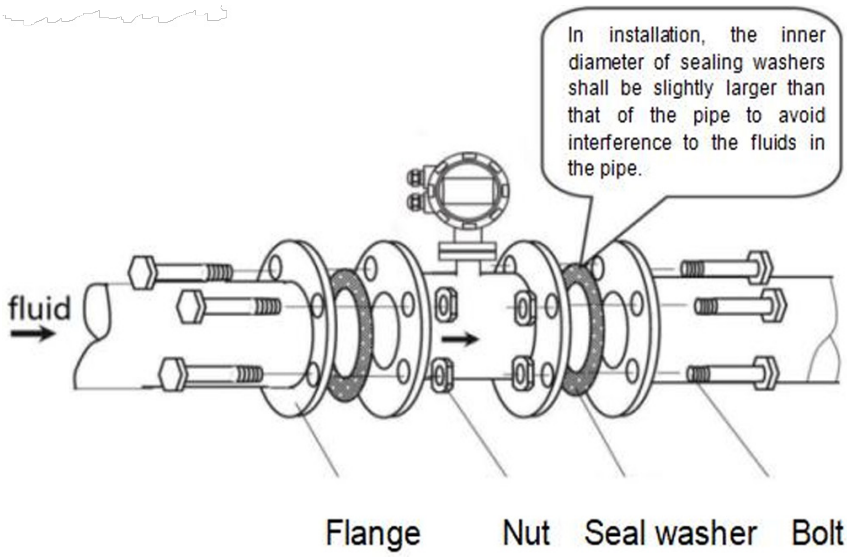

## Dimensons

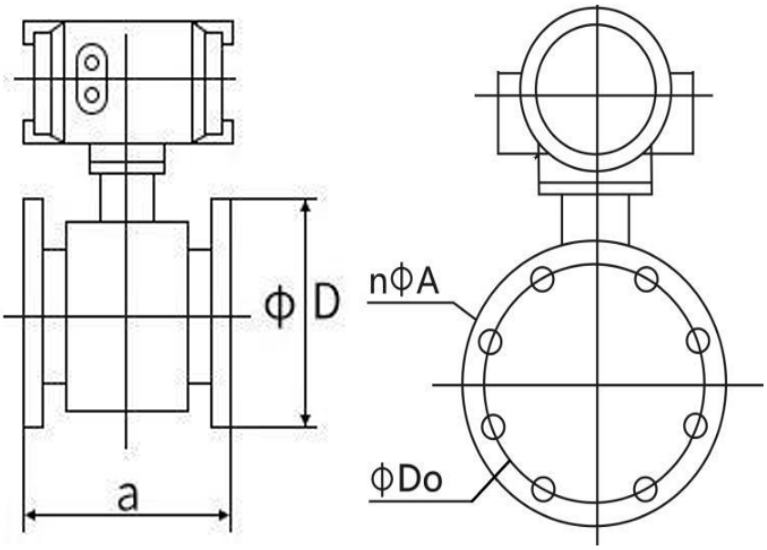


| ANSI/DN (Inches / mm) | a (Inches / mm) | D (Inches / mm) | Do (Inches / mm) | n*A | Pressure Resistance (psi / mPa) |
|---|---|---|---|---|---|
| 0.394" / 10 mm | 7.874" / 200 mm | 3.543" / 90 mm | 2.362" / 60 mm | 4*14 | 232 psi / 1.6 Mpa |
| 0.591" / 15 mm | 7.874" / 200 mm | 3.740" / 95 mm | 2.559" / 65 mm | 4*14 | 233 psi / 1.6 Mpa |
| 0.787" / 20 mm | 7.874" / 200 mm | 4.134" / 105 mm | 2.953" / 75 mm | 4*14 | 234 psi / 1.6 Mpa |
| 0.984" / 25 mm | 7.874" / 200 mm | 4.528" / 115 mm | 3.346" / 85 mm | 4*14 | 235 psi / 1.6 Mpa |
| 1.260" / 32 mm | 7.874" / 200 mm | 5.315" / 135 mm | 3.937" / 100 mm | 4*18 | 236 psi / 1.6 Mpa |
| 1.575" / 40 mm | 7.874" / 200 mm | 5.709" / 145 mm | 4.331" / 110 mm | 4*18 | 237 psi / 1.6 Mpa |
| 1.969" / 50 mm | 7.874" / 200 mm | 6.299" / 160 mm | 4.921" / 125 mm | 4*18 | 238 psi / 1.6 Mpa |
| 2.559" / 65 mm | 7.874" / 200 mm | 7.087" / 180 mm | 5.709" / 145 mm | 4*18 | 239 psi / 1.6 Mpa |
| 3.150" / 80 mm | 7.874" / 200 mm | 7.677" / 195 mm | 6.299" / 160 mm | 8*18 | 240 psi / 1.6 Mpa |
| 3.937" / 100 mm | 9.843" / 250 mm | 8.465" / 215 mm | 7.087" / 180 mm | 8*18 | 241 psi / 1.6 Mpa |
| 4.921" / 125 mm | 9.843" / 250 mm | 9.646" / 245 mm | 8.268" / 210 mm | 8*18 | 242 psi / 1.6 Mpa |
| 5.906" / 150 mm | 11.811" / 300 mm | 11.024" / 280 mm | 9.449" / 240 mm | 8*23 | 243 psi / 1.6 Mpa |
| 7.874" / 200 mm | 13.780" / 350 mm | 13.189" / 335 mm | 11.614" / 295 mm | 12*23 | 244 psi / 1.6 Mpa |
| 9.843" / 250 mm | 17.717" / 450 mm | 15.945" / 405 mm | 13.976" / 355 mm | 12*25 | 245 psi / 1.6 Mpa |
| 11.811" / 300 mm | 19.685" / 500 mm | 17.323" / 440 mm | 15.748" / 400 mm | 12*23 | 145 psi / 1.0 Mpa |
| 13.780" / 350 mm | 21.654" / 550 mm | 19.685" / 500 mm | 18.110" / 460 mm | 16*23 | 145 psi / 1.0 Mpa |
| 15.748" / 400 mm | 23.622" / 600 mm | 22.244" / 565 mm | 20.276" / 515 mm | 16*25 | 145 psi / 1.0 Mpa |
| 17.717" / 450 mm | 23.622" / 600 mm | 24.213" / 615 mm | 22.244" / 565 mm | 20*25 | 145 psi / 1.0 Mpa |
| 19.685" / 500 mm | 23.622" / 600 mm | 26.378" / 670 mm | 24.409" / 620 mm | 20*25 | 145 psi / 1.0 Mpa |
| 23.622" / 600 mm | 23.622" / 600 mm | 30.709" / 780 mm | 28.543" / 725 mm | 20*30 | 145 psi / 1.0 Mpa |
| 27.559" / 700 mm | 27.559" / 700 mm | 35.236" / 895 mm | 33.071" / 840 mm | 24*30 | 145 psi / 1.0 Mpa |
| 31.496" / 800 mm | 31.496" / 800 mm | 39.961" / 1,015 mm | 37.402" / 950 mm | 24*33 | 145 psi / 1.0 Mpa |
| 35.433" / 900 mm | 35.433" / 900 mm | 43.898" / 1,115 mm | 41.339" / 1,050 mm | 28*33 | 145 psi / 1.0 Mpa |
| 39.370" / 1,000 mm | 39.370" / 1,000 mm | 48.425" / 1,230 mm | 45.669" / 1,160 mm | 28*36 | 145 psi / 1.0 Mpa |

## Engineering Codes

| LMF21 GENERAL APPLICATION FLOWMETER, ENGINEERED PART NUMBER (ASME FLANGE SIZES) | | L M F 2 1 - | | | | - | | - | | - | | | | - | | - | | | - | | - | | - | | - | | | | |
|---|---|---|---|---|---|---|---|---|---|---|---|---|---|---|---|---|---|---|---|---|---|---|---|---|---|---|---|---|
| **OUTPUT & COMMUNICATION TYPES** | 4/20mA + Pulse + RS485 | | A | A | | | | | | | | | | | | | | | | | | | | | | | | |
| | 4/20mA + Pulse + RS485 | | A | M | | | | | | | | | | | | | | | | | | | | | | | | |
| | 4/20mA + HART + Pulse + RS485 | | A | E | | | | | | | | | | | | | | | | | | | | | | | | |
| | 4/20mA + HART + Pulse + RS485 | | A | N | | | | | | | | | | | | | | | | | | | | | | | | |
| | Pulse + 4/20mA + RS485 + SPST | | A | C | | | | | | | | | | | | | | | | | | | | | | | | |
| | Pulse + 4/20mA + RS485 + SPST | | A | P | | | | | | | | | | | | | | | | | | | | | | | | |
| | Pulse + 4/20mA + HART + RS485 + SPST | | C | E | | | | | | | | | | | | | | | | | | | | | | | | |
| | Pulse + 4/20mA + HART + RS485 + SPST | | C | F | | | | | | | | | | | | | | | | | | | | | | | | |
| **POWER SUPPLY** | 100~220VAC | | | | G | | | | | | | | | | | | | | | | | | | | | | | |
| | 24VDC | | | | K | | | | | | | | | | | | | | | | | | | | | | | |
| **ACCURACY** | 0.5% STANDARD | | | | | A | | | | | | | | | | | | | | | | | | | | | | |
| | 0.3% HIGHER ACCURACY (DN25 TO DN300 ONLY) | | | | | B | | | | | | | | | | | | | | | | | | | | | | |
| **NOMINAL PRESSURE** | CLASS 150 | | | | | | F | | | | | | | | | | | | | | | | | | | | | |
| | CLASS 300 | | | | | | G | | | | | | | | | | | | | | | | | | | | | |
| | OTHER, SPECIFY | | | | | | ? | | | | | | | | | | | | | | | | | | | | | |
| **PROCESS CONNECTION STANDARD (FLANGE CONNECTION)** | CARBON STEEL (STANDARD) | | | | | | | 1 | | | | | | | | | | | | | | | | | | | | |
| **FLANGE & BODY MATERIAL** | 304SS (AVAILABLE UP TO 12") | | | | | | | 2 | | | | | | | | | | | | | | | | | | | | |
| | OTHER MATERIAL, SPECIFY | | | | | | | ? | | | | | | | | | | | | | | | | | | | | |
| **NOMINAL FLANGE SIZE, ASME** | 3/8" | | | | | | | | B | 1 | 0 | | | | | | | | | | | | | | | | | |
| | 1/2" | | | | | | | | B | 1 | 5 | | | | | | | | | | | | | | | | | |
| | 3/4" | | | | | | | | B | 2 | 0 | | | | | | | | | | | | | | | | | |
| | 1" | | | | | | | | B | 2 | 5 | | | | | | | | | | | | | | | | | |
| | 1 1/4" | | | | | | | | B | 3 | 2 | | | | | | | | | | | | | | | | | |
| | 1 1/2" | | | | | | | | B | 4 | 0 | | | | | | | | | | | | | | | | | |
| | 2" | | | | | | | | B | 5 | 0 | | | | | | | | | | | | | | | | | |
| | 2 1/2" | | | | | | | | B | 6 | 5 | | | | | | | | | | | | | | | | | |
| | 3" | | | | | | | | B | 8 | 0 | | | | | | | | | | | | | | | | | |
| | 4" | | | | | | | | B | 1 | H | | | | | | | | | | | | | | | | | |
| | 5" | | | | | | | | B | 1 | Q | | | | | | | | | | | | | | | | | |
| | 6" | | | | | | | | B | 1 | F | | | | | | | | | | | | | | | | | |
| | 8" | | | | | | | | B | 2 | H | | | | | | | | | | | | | | | | | |
| | 10" | | | | | | | | B | 2 | F | | | | | | | | | | | | | | | | | |
| | 12" | | | | | | | | B | 3 | H | | | | | | | | | | | | | | | | | |
| | 14" | | | | | | | | B | 3 | F | | | | | | | | | | | | | | | | | |
| | 16" | | | | | | | | B | 4 | H | | | | | | | | | | | | | | | | | |
| | 18" | | | | | | | | B | 4 | F | | | | | | | | | | | | | | | | | |
| | 20" | | | | | | | | B | 5 | H | | | | | | | | | | | | | | | | | |
| | 24" | | | | | | | | B | 6 | H | | | | | | | | | | | | | | | | | |
| | 28" | | | | | | | | B | 7 | H | | | | | | | | | | | | | | | | | |
| | 32" | | | | | | | | B | 8 | H | | | | | | | | | | | | | | | | | |
| | 36" | | | | | | | | B | 9 | H | | | | | | | | | | | | | | | | | |
| | 40" | | | | | | | | B | 1 | T | | | | | | | | | | | | | | | | | |
| **LINER MATERIAL** | PTFE (-10~120°C / 14 to 248°F) | | | | | | | | | | | T | | | | | | | | | | | | | | | | |
| | PFA (-10~120°C / 14 to 248°F) DN15-DN300 ONLY | | | | | | | | | | | P | | | | | | | | | | | | | | | | |
| | OTHER MATERIAL, SPECIFY | | | | | | | | | | | ? | | | | | | | | | | | | | | | | |
| **ELECTRODE MATERIAL** | 316 L | | | | | | | | | | | | E | | | | | | | | | | | | | | | |
| | HASTELLOY B | | | | | | | | | | | | N | | | | | | | | | | | | | | | |
| | HASTELLOY C | | | | | | | | | | | | O | | | | | | | | | | | | | | | |
| | TITANIUM | | | | | | | | | | | | I | | | | | | | | | | | | | | | |
| | TANTALUM | | | | | | | | | | | | Q | | | | | | | | | | | | | | | |
| | OTHER MATERIAL, SPECIFY | | | | | | | | | | | | ? | | | | | | | | | | | | | | | |
| **HOUSING MATERIAL, ELECTRICAL CONNECTION & PROTECTION LEVEL (10M CABLE INCLUDED IN REMOTE VERSION)** | Integrated Aluminum Housing, 1/2" NPT Cable Gland, IP65 | | | | | | | | | | | | | N | A | | | | | | | | | | | | | |
| | Integrated Aluminum Housing, 1/2" NPT Cable Gland,Alloy, IP66/67 | | | | | | | | | | | | | N | 6 | | | | | | | | | | | | | |
| | Remote Mounted Aluminum Housing, 1/2" NPT Cable Gland, IP68 | | | | | | | | | | | | | N | C | | | | | | | | | | | | | |
| | Integrated Aluminum Housing, M20x1.5 Cable Gland, IP65 | | | | | | | | | | | | | W | A | | | | | | | | | | | | | |
| | Integrated Aluminum Housing, M20x1.5 Cable Gland, IP66/67 | | | | | | | | | | | | | W | 6 | | | | | | | | | | | | | |
| | Remote Mounted Aluminum Housing, M20x1.5 Cable Gland, IP68 | | | | | | | | | | | | | W | C | | | | | | | | | | | | | |
| **CABLE LENGTH** | 33' / 10M | | | | | | | | | | | | | | | 1 | 0 | | | | | | | | | | | |
| | 49' / 15M | | | | | | | | | | | | | | | 1 | 5 | | | | | | | | | | | |
| | 66' / 20M | | | | | | | | | | | | | | | 2 | 0 | | | | | | | | | | | |
| | 82' / 25M | | | | | | | | | | | | | | | 2 | 5 | | | | | | | | | | | |
| | 98' / 30M | | | | | | | | | | | | | | | 3 | 0 | | | | | | | | | | | |
| | OTHER LENGTH, SPECIFY | | | | | | | | | | | | | | | ? | ? | | | | | | | | | | | |
| **MEASUREMENT TYPE** | METRIC MEASUREMENTS - L/h, L/m, L/s, m³/h, m³/m, m³/s, | | | | | | | | | | | | | | | | | A | | | | | | | | | | |
| | IMPERIAL MEASUREMENTS - GPH, GPM, GPS, ft³/m, ft³/m, ft³/s | | | | | | | | | | | | | | | | | B | | | | | | | | | | |
| | OTHER MEASUREMENT TYPE, SPECIFY | | | | | | | | | | | | | | | | | ? | | | | | | | | | | |
| **LANGUAGES** | ENGLISH | | | | | | | | | | | | | | | | | | 1 | | | | | | | | | |
| | SPANISH | | | | | | | | | | | | | | | | | | 2 | | | | | | | | | |
| | FRENCH | | | | | | | | | | | | | | | | | | 3 | | | | | | | | | |
| | CHINESE | | | | | | | | | | | | | | | | | | 4 | | | | | | | | | |
| | OTHER LANGUAGE, SPECIFY | | | | | | | | | | | | | | | | | | ? | | | | | | | | | |
| **SPECIAL SELECTION** | GROUNDING RING 316L SS | | | | | | | | | | | | | | | | | | | P | E | | | | | | | |
| | CARBON COMPANION FLANGE WITH BOLTS | | | | | | | | | | | | | | | | | | | P | B | | | | | | | |
| | 304SS COMPANION FLANGE WITH BOLTS | | | | | | | | | | | | | | | | | | | P | C | | | | | | | |
| | SPECIAL | | | | | | | | | | | | | | | | | | | Z | # | # | # | | | | | |

## Engineering Codes (Continued)

| LMF21 GENERAL APPLICATION FLOWMETER, ENGINEERED PART NUMBER (EN FLANGE SIZES) | | L M F 2 1 - | | | | - | | - | | | - | | | | - | | | - | | | - | | | - | | | - | | | | |
|---|---|---|---|---|---|---|---|---|---|---|---|---|---|---|---|---|---|---|---|---|---|---|---|---|---|---|---|---|---|---|---|
| **OUTPUT & COMMUNICATION TYPES** | 4/20mA + Pulse + RS485 | | A | A | | | | | | | | | | | | | | | | | | | | | | | | | | | |
| | 4/20mA + Pulse + RS485 | | A | M | | | | | | | | | | | | | | | | | | | | | | | | | | | |
| | 4/20mA + HART + Pulse + RS485 | | A | E | | | | | | | | | | | | | | | | | | | | | | | | | | | |
| | 4/20mA + HART + Pulse + RS485 | | A | N | | | | | | | | | | | | | | | | | | | | | | | | | | | |
| | Pulse + 4/20mA + RS485 + SPST | | A | C | | | | | | | | | | | | | | | | | | | | | | | | | | | |
| | Pulse + 4/20mA + RS485 + SPST | | A | P | | | | | | | | | | | | | | | | | | | | | | | | | | | |
| | Pulse + 4/20mA + HART + RS485 + SPST | | C | E | | | | | | | | | | | | | | | | | | | | | | | | | | | |
| | Pulse + 4/20mA + HART + RS485 + SPST | | C | F | | | | | | | | | | | | | | | | | | | | | | | | | | | |
| **POWER SUPPLY** | 100~220VAC | | | | G | | | | | | | | | | | | | | | | | | | | | | | | | | |
| | 24VDC | | | | K | | | | | | | | | | | | | | | | | | | | | | | | | | |
| **ACCURACY** | 0.5% STANDARD | | | | | A | | | | | | | | | | | | | | | | | | | | | | | | | |
| | 0.3% HIGHER ACCURACY (DN25 TO DN300 ONLY) | | | | | B | | | | | | | | | | | | | | | | | | | | | | | | | |
| **NOMINAL PRESSURE** | PN6 | | | | | | B | | | | | | | | | | | | | | | | | | | | | | | | |
| | PN10 | | | | | | C | | | | | | | | | | | | | | | | | | | | | | | | |
| | PN16 | | | | | | D | | | | | | | | | | | | | | | | | | | | | | | | |
| | PN25 | | | | | | E | | | | | | | | | | | | | | | | | | | | | | | | |
| | PN40 | | | | | | F | | | | | | | | | | | | | | | | | | | | | | | | |
| | OTHER, SPECIFY | | | | | | ? | | | | | | | | | | | | | | | | | | | | | | | | |
| **PROCESS CONNECTION STANDARD (FLANGE CONNECTIO** | CARBON STEEL (STANDARD) | | | | | | | 1 | | | | | | | | | | | | | | | | | | | | | | | |
| **FLANGE & BODY MATERIAL** | 304SS (AVAILABLE UP TO DN300) | | | | | | | 2 | | | | | | | | | | | | | | | | | | | | | | | |
| | OTHER MATERIAL, SPECIFY | | | | | | | ? | | | | | | | | | | | | | | | | | | | | | | | |
| **NOMINAL FLANGE SIZE, EN** | DN10 UP TO 1.6 MPA RATED | | | | | | | | A | 1 | 0 | | | | | | | | | | | | | | | | | | | | |
| | DN15 UP TO 1.6 MPA RATED | | | | | | | | A | 1 | 5 | | | | | | | | | | | | | | | | | | | | |
| | DN20 UP TO 1.6 MPA RATED | | | | | | | | A | 2 | 0 | | | | | | | | | | | | | | | | | | | | |
| | DN25 UP TO 1.6 MPA RATED | | | | | | | | A | 2 | 5 | | | | | | | | | | | | | | | | | | | | |
| | DN32 UP TO 1.6 MPA RATED | | | | | | | | A | 3 | 2 | | | | | | | | | | | | | | | | | | | | |
| | DN40 UP TO 1.6 MPA RATED | | | | | | | | A | 4 | 0 | | | | | | | | | | | | | | | | | | | | |
| | DN50 UP TO 1.6 MPA RATED | | | | | | | | A | 5 | 0 | | | | | | | | | | | | | | | | | | | | |
| | DN65 UP TO 1.6 MPA RATED | | | | | | | | A | 6 | 5 | | | | | | | | | | | | | | | | | | | | |
| | DN80 UP TO 1.6 MPA RATED | | | | | | | | A | 8 | 0 | | | | | | | | | | | | | | | | | | | | |
| | DN100 UP TO 1.6 MPA RATED | | | | | | | | A | 1 | H | | | | | | | | | | | | | | | | | | | | |
| | DN125 UP TO 1.6 MPA RATED | | | | | | | | A | 1 | Q | | | | | | | | | | | | | | | | | | | | |
| | DN150 UP TO 1.6 MPA RATED | | | | | | | | A | 1 | F | | | | | | | | | | | | | | | | | | | | |
| | DN200 UP TO 1.6 MPA RATED | | | | | | | | A | 2 | H | | | | | | | | | | | | | | | | | | | | |
| | DN250 UP TO 1.6 MPA RATED | | | | | | | | A | 2 | F | | | | | | | | | | | | | | | | | | | | |
| | DN300 UP TO 1.0 MPA RATED | | | | | | | | A | 3 | H | | | | | | | | | | | | | | | | | | | | |
| | DN350 UP TO 1.0 MPA RATED | | | | | | | | A | 3 | F | | | | | | | | | | | | | | | | | | | | |
| | DN400 UP TO 1.0 MPA RATED | | | | | | | | A | 4 | H | | | | | | | | | | | | | | | | | | | | |
| | DN450 UP TO 1.0 MPA RATED | | | | | | | | A | 4 | F | | | | | | | | | | | | | | | | | | | | |
| | DN500 UP TO 1.0 MPA RATED | | | | | | | | A | 5 | H | | | | | | | | | | | | | | | | | | | | |
| | DN600 UP TO 1.0 MPA RATED | | | | | | | | A | 6 | H | | | | | | | | | | | | | | | | | | | | |
| | DN700 UP TO 1.0 MPA RATED | | | | | | | | A | 7 | H | | | | | | | | | | | | | | | | | | | | |
| | DN800 UP TO 1.0 MPA RATED | | | | | | | | A | 8 | H | | | | | | | | | | | | | | | | | | | | |
| | DN900 UP TO 1.0 MPA RATED | | | | | | | | A | 9 | H | | | | | | | | | | | | | | | | | | | | |
| | DN1000 UP TO 1.0 MPA RATED | | | | | | | | A | 1 | T | | | | | | | | | | | | | | | | | | | | |
| **LINER MATERIAL** | PTFE (-10~120°C / 14 to 248°F) | | | | | | | | | | | T | | | | | | | | | | | | | | | | | | | |
| | PFA (-10~120°C / 14 to 248°F) DN15-DN300 ONLY | | | | | | | | | | | P | | | | | | | | | | | | | | | | | | | |
| | OTHER MATERIAL, SPECIFY | | | | | | | | | | | ? | | | | | | | | | | | | | | | | | | | |
| **ELECTRODE MATERIAL** | 316 L | | | | | | | | | | | | E | | | | | | | | | | | | | | | | | | |
| | HASTELLOY B | | | | | | | | | | | | N | | | | | | | | | | | | | | | | | | |
| | HASTELLOY C | | | | | | | | | | | | O | | | | | | | | | | | | | | | | | | |
| | TITANIUM | | | | | | | | | | | | I | | | | | | | | | | | | | | | | | | |
| | TANTALUM | | | | | | | | | | | | Q | | | | | | | | | | | | | | | | | | |
| | OTHER MATERIAL, SPECIFY | | | | | | | | | | | | ? | | | | | | | | | | | | | | | | | | |
| **HOUSING MATERIAL, ELECTRICAL CONNECTION & PROTEC** | Integrated Aluminum Housing, 1/2" NPT Cable Gland, IP65 | | | | | | | | | | | | | N | A | | | | | | | | | | | | | | | | |
| **(10M CABLE INCLUDED IN REMOTE VERSION)** | Integrated Aluminum Housing, 1/2" NPT Cable Gland,Alloy, IP66/67 | | | | | | | | | | | | | N | 6 | | | | | | | | | | | | | | | | |
| | Remote Mounted Aluminum Housing, 1/2" NPT Cable Gland, IP68 | | | | | | | | | | | | | N | C | | | | | | | | | | | | | | | | |
| | Integrated Aluminum Housing, M20x1.5 Cable Gland, IP65 | | | | | | | | | | | | | W | A | | | | | | | | | | | | | | | | |
| | Integrated Aluminum Housing, M20x1.5 Cable Gland, IP66/67 | | | | | | | | | | | | | W | 6 | | | | | | | | | | | | | | | | |
| | Remote Mounted Aluminum Housing, M20x1.5 Cable Gland, IP68 | | | | | | | | | | | | | W | C | | | | | | | | | | | | | | | | |
| **CABLE LENGTH** | 33' / 10M | | | | | | | | | | | | | | | 1 | 0 | | | | | | | | | | | | | | |
| | 49' / 15M | | | | | | | | | | | | | | | 1 | 5 | | | | | | | | | | | | | | |
| | 66' / 20M | | | | | | | | | | | | | | | 2 | 0 | | | | | | | | | | | | | | |
| | 82' / 25M | | | | | | | | | | | | | | | 2 | 5 | | | | | | | | | | | | | | |
| | 98' / 30M | | | | | | | | | | | | | | | 3 | 0 | | | | | | | | | | | | | | |
| | OTHER LENGTH, SPECIFY | | | | | | | | | | | | | | | ? | ? | | | | | | | | | | | | | | |
| **MEASUREMENT TYPE** | METRIC MEASUREMENTS - L/h, L/m, L/s, m³/h, m³/m, m³/s, | | | | | | | | | | | | | | | | | A | | | | | | | | | | | | | |
| | IMPERIAL MEASUREMENTS - GPH, GPM, GPS, ft³/m, ft³/m, ft³/s | | | | | | | | | | | | | | | | | B | | | | | | | | | | | | | |
| | OTHER MEASUREMENT TYPE, SPECIFY | | | | | | | | | | | | | | | | | ? | | | | | | | | | | | | | |
| **LANGUAGES** | ENGLISH | | | | | | | | | | | | | | | | | | 1 | | | | | | | | | | | | |
| | SPANISH | | | | | | | | | | | | | | | | | | 2 | | | | | | | | | | | | |
| | FRENCH | | | | | | | | | | | | | | | | | | 3 | | | | | | | | | | | | |
| | CHINESE | | | | | | | | | | | | | | | | | | 4 | | | | | | | | | | | | |
| | OTHER LANGUAGE, SPECIFY | | | | | | | | | | | | | | | | | | ? | | | | | | | | | | | | |
| **SPECIAL SELECTION** | GROUNDING RING 316L SS | | | | | | | | | | | | | | | | | | | P | E | | | | | | | | | | |
| | CARBON COMPANION FLANGE WITH BOLTS | | | | | | | | | | | | | | | | | | | P | B | | | | | | | | | | |
| | 304SS COMPANION FLANGE WITH BOLTS | | | | | | | | | | | | | | | | | | | P | C | | | | | | | | | | |
| | SPECIAL | | | | | | | | | | | | | | | | | | | Z | # | # | # | | | | | | | | |

## *Pressure Conversion Table*

| Dial Scale | psi | kPa | kg/cm$^2$ | cm of $H_2O$ | feet of $H_2O$ | inches of Hg | mm of Hg | inches of $H_2O$ | ounces per square inch | atmosphere | bar | mbar | MPa |
|---|---|---|---|---|---|---|---|---|---|---|---|---|---|
| psi | 1 | 6.894757 | 0.070306958 | 70.306927 | 2.306723 | 2.03602 | 51.71486 | 27.68068 | 16 | 0.0680460 | 0.06894757 | 68.9476 | 0.00689 |
| kPa | 0.1450377 | 1 | 0.01019716 | 10.19745 | 0.3345618 | 0.29522997 | 7.500610 | 4.01472 | 2.320603 | 0.009669235 | 0.01 | 10 | 0.001 |
| kg/cm$^2$ | 14.223343 | 98.06694 | 1 | 1000.026 | 32.809312 | 28.95901 | 735.5588 | 393.711806 | 227.57349 | 0.967841596 | 0.98066494 | 980 | 0.09806 |
| cm of $H_2O$ | 0.0142229 | 0.0980634 | 0.00099997 | 1 | 0.032808 | 0.0289581 | 0.7355372 | 0.3937 | 0.227566 | 0.000967814 | 0.000980634 | 0.9806 | 0.000098 |
| feet of $H_2O$ | 0.433515 | 2.968961 | 0.03047912 | 30.480 | 1 | 0.882646 | 22.4192 | 12 | 6.93624 | 0.02949896 | 0.02968961 | 29.689 | 0.00298 |
| inches of Hg | 0.4911542 | 3.386389 | 0.0345316 | 34.53253 | 1.132957 | 1 | 25.4 | 13.595484 | 7.85847 | 0.0334211 | 0.03386389 | 33.8639 | 0.00386 |
| mm of Hg | 0.0193368 | 0.1333225 | 0.00135951 | 1.359554 | 0.0446046 | 0.039370079 | 1 | 0.535255 | 0.3093888 | 0.0013157895 | 0.001333225 | 1.33322 | 0.00013 |
| inches of $H_2O$ | 0.03612628 | 0.2490819 | 0.00254219 | 2.54 | 0.08333 | 0.0735539 | 1.8682683 | 1 | 0.578020 | 0.00245825 | 0.002490819 | 2.49089 | 0.000249 |
| ounces per square inch | 0.0625 | 0.4309223 | 0.004394308 | 4.394308 | 0.14417 | 0.12725125 | 3.23218 | 1.73004 | 1 | 0.004252875 | 0.004309223 | 4.309 | 0.0004309 |
| atmosphere | 14.6960 | 101.32535 | 1.033231 | 1033.2633 | 33.8995 | 29.9213 | 760 | 406.794 | 235.136 | 1 | 1.0132535 | 1013.25 | 0.1013 |
| bar | 14.5038 | 100 | 1.019716 | 1019.7466 | 33.4833 | 29.5300 | 750.0626 | 401.8596 | 232.0608 | 0.986923 | 1 | 1000 | 0.1 |
| mbar | 0.0145 | 0.1 | 0.001019 | 1.019 | 0.03456 | 0.02953 | 0.75006 | 0.40146 | 0.23206 | 0.00099 | 0.001 | 1 | 0.0001 |
| MPa | 145 | 1000 | 10.197 | 10197.45 | 334.56 | 295.299 | 7500.61 | 4014.74 | 2320.603 | 9.669 | 10 | 10000 | 1 |

**How to use Winters' conversion table:**

1. Find the COLUMN with the unit of measure you want to convert from and move down that COLUMN until you find the number "1"
2. Move horizontally within the same ROW to find the Conversion Factor
3. Multiply the Conversion Factor (number in the box) by the amount you are changing from to get the pressure in the scale you are seeking (e.g. 50 bar to be converted to psi scale: 1 bar equals to 14.5038 psi (Conversion Factor), so 50 bar equals to 725.19 psi)

**Use Winters' Converter online: www.winters.com/converter.htm**

# Winters Approvals / Certifying Agencies

## 3A

The objective of the 3A Sanitary Standards Committee is to formulate standards and accepted practices for equipment and systems used to process milk and milk products. Such standards are developed through all levels of sanitarians, equipment manufacturers and equipment users so those standards are acceptable to those involved in the sanitary aspects of dairy and related industries. The 3A Symbol Administrative Council authorizes manufacturers to display the 3A symbol on processing equipment that is in compliance with 3A Sanitary Standards.

## CSA

The Canadian Standards Association (CSA) includes Canadian consumers, manufacturers, labour, government, and other regulatory agencies among its actively participating influences. The various groups work together to generate standard requirements (CSA standards) that demonstrate product quality, enhance market acceptability and improve quality and safety control procedures in manufacturing and construction for the Canadian marketplace. The standards generated by CSA are the cornerstones for determining a product's eligibility for certification in hazardous locations in Canada. CSA also performs product evaluation, testing and ongoing inspection to these standards and also to American and European standards through new inter-laboratory agreements.

## CE

Having a CE marking is a declaration that Winters' product conforms to a specific Directive adopted by the EEA (European Economic Area), and is a requirement if the product is to be sold into any of the countries in this 18 member group. CE is an abbreviation for the "Conformité Européenne", meaning European Conformance. Unlike dangerous location approvals, CE markings are granted to products that conform to Directives which were developed using IEC and Cenelec standards. The Directives that affect transmitters are the EMC (Electromagnetic Compatibility) and LVD (Low Voltage) Directives. These state that the products must meet specific electromagnetic emission and immunity, as well as electrostatic discharge standards.

## CRN

A Canadian Registration Number (CRN) is a number issued by each province or territory of Canada to the design of a pressure vessel or fitting. The CRN identifies the design has been accepted and registered for use in that province or territory. The CRN is assigned to any pressure vessel or fitting built to a registered design.

## FM

FM Approvals is an international leader in third-party testing and certification services. They test property loss prevention products and services—for use in commercial and industrial facilities—to verify they meet rigorous loss prevention standards of quality, technical integrity and performance. How? By employing a worldwide certification process that's backed by scientific research and testing, and over a century of experience.The FM APPROVED mark is recognized and respected worldwide. Their certification instills confidence and commands respect in the marketplace.

## ISO 9001

Winters is an ISO 9001 registered corporation. ISO 9001 requires an organization to demonstrate its ability to consistently provide products that meet customer and regulatory requirements, and enhance customer satisfaction through effective application of the system, including processes for continual improvement of the system and the assurance of conformity.

## NACE

The National Association of Corrosion Engineers recommends practices such as methods of selection, design, installation, maintenance or operation of material or systems where corrosion is a factor. Some recommended practices focus on details of construction of a corrosion control system, methods of treating the surface of materials to reduce corrosion, requirements for using devices to reduce corrosion, and procedures for increasing the effectiveness, safety and economic benefits of an installation or system.

# Winters Approvals / Certifying Agencies

## UL/ULC

Underwriters Laboratories and Underwriters Laboratories of Canada maintain a high commitment to public safety and dedication to exceed customer expectations through continual improvement in the delivery of quality services. The organizations develop and publish standards, classifications and specifications for products having a bearing on fire, accident or property hazards. If a product carries the UL mark, it means that UL found the product meeting UL's safety requirements. These requirements are based primarily on UL's own published Standards for Safety.

## NSF

Manufacturers, regulators and consumers look to NSF International for the development of public health standards and certification programs that help protect the world's food, water, consumer products and environment. Their mission is to protect and improve global human health. As an independent, accredited organization, NSF's standards group facilitates the development of standards, and their service groups test and certify products and systems. They also provide auditing and risk management solutions for public health and the environment. Founded in 1944 as the National Sanitation Foundation, they changed their name to NSF International in 1990 as they expanded their services beyond sanitation and into global markets.

## RoHS

The Restriction of Hazardous Substances Directive restricts the use of six hazardous materials in the manufacturing of electronic and electrical equipment. These materials are: lead, mercury, cadmium, hexavalent chromium, polybrominated biphenyls and polybrominated diphenyl ether. Bring "RoHS compliant" is commonly interpreted as bring "lead-free", or having under 0.1% of lead in the material.

## SIL

This SIL Verification of Compliance has been issued on a voluntary basis. ECM confirms that a Test Report is existent for the above listed product(s) and found to meet the requirements of above standards for application in safety related system up to Safety Level of SIL 2. The unit must be properly designed into a Safety Instrument Function as per the requirements in the Safety Manual. The Verification Mark shown above can be affixed on the product. It is NOT permitted to alter the Verification Mark in any way. In addition the Verification's Holder is NOT allowed to transfer the Verification to third parties. This certificate can be checked for validity at www.entecerma.it.

## ASME

ASME (American Society of Mechanical Engineers) is the leading international developer of codes and standards, hereafter referred to as standards, associated with the art, science, and practice of mechanical engineering. ASME is the globally recognized, trusted source of consensus standards since 1884. Many of Winters products adhere to the standards set out by ASME, for examples, mechanical Pressure Gauges comply to ASME standard B40.100. Here is the link to ASME's website: https://www.asme.org/codes-standards/about-standards

## USA Safe Drinking Water Act

The Safe Drinking Water Act (SDWA) was established to protect the quality of drinking water in the U.S. This law focuses on all waters actually or potentially designed for drinking use, whether from above ground or underground sources. The Act authorizes EPA to establish minimum standards to protect tap water and requires all owners or operators of public water systems to comply with these primary (health-related) standards. Additional information on the Code and the EPA is available here: https://www.epa.gov/laws-regulations/summary-safe-drinking-water-act

## REACH

The Regulation on the registration, evaluation, authorisation and restriction of chemicals (REACH) is the main EU law to protect human health and the environment from the risks that can be posed by chemicals. This is done by better and earlier identification of the intrinsic properties of chemical substances and by taking measures, such as phasing out or restricting substances of very high concern. REACH also aims to enhance innovation and the competitiveness of the EU chemicals industry. For more information regarding REACH, follow this link: https://environment.ec.europa.eu/topics/chemicals/reach-regulation_en

## INTERTEK

Intertek laboratory services test products and materials across industries, markets and locations. Intertek providing clients across the world with quality control, research, testing, measurement, and certification activities for industry, commerce, markets, institutions, and governments. The Intertek company website is located here: https://www.intertek.com/

## Ingress Protection (IP) Ratings

The **IP** Code indicates the **degree of protection** provided by enclosures for electrical equipment (i.e. IP65 = No dust entry and protected against low pressure jet of water).

**The first numeral** indicates protection of persons against access to dangerous parts and protection of internal equipment against the ingress of solid foreign objects.

| | |
|---|---|
| **X** | Protection unspecified (untested) |
| **0** | No special protection provided |
| **1** | Protection of hand against accidental access to dangerous parts, and protection of equipment against objects larger than 50mm |
| **2** | Protection of fingers against access to dangerous parts, and protection of equipment against objects larger than 12mm |
| **3** | Protection against objects larger than 2.5mm (e.g. tools, wires) |
| **4** | Protection against objects larger than 1mm (e.g. line tools, wires) |
| **5** | Protection against entry of dust in sufficient quantity to interfere with satisfactory operation of equipment |
| **6** | Complete protection against entry of dust |

**The second numeral** indicates protection of internal equipment against harmful ingress of water.

| | |
|---|---|
| **X** | Protection unspecified (untested) |
| **0** | No special protection provided |
| **1** | Protection against drops of water falling vertically |
| **2** | Protection against drops of water falling vertically when the object is tilted by up to 15 degrees from its normal position (in any direction) |
| **3** | Protection against spraying water at up to 60 degrees from the vertical |
| **4** | Protection against splashing and spraying water from all practicable directions |
| **5** | Protection against a low pressure jet of water from all practicable directions |
| **6** | Protection against heavy seas or a strong jet of water from all practicable directions |
| **6D** | Protection against driving rain at angles down to horizontal |
| **7** | Protection against immersion |
| **8** | Protection against submersion (tests subject to agreement, but no less severe than numeral 7) |

*Pressure Switch Reference*

## Hazardous Location Definitions

| | |
|---|---|
| **Class I** | Locations in which flammable gases or vapours are or may be present in the air in quantities sufficient to produce explosive or ignitable mixtures. |
| **Class II** | Locations which are hazardous because of the presence of combustible dust. |
| **Class III** | Locations which are hazardous because of the presence of easily ignitable fibers or flyings, but in which such fibers or flyings are not likely to be suspended in air in quantities sufficient to produce ignitable mixtures. |
| **Division 1** | Locations in which hazardous concentrations in the air exist continuously, intermittently, or periodically under normal operating conditions. |
| **Division 2** | Locations in which hazardous materials are handled, processed, or used, but where such materials are normally within closed containers or closed systems from which they can escape only in case of accidental rupture or breakdown. |
| **Group A** | Atmospheres containing acetylene. |
| **Group B** | Atmospheres containing hydrogen, or gases or vapours of equivalent hazard, such as manufactured gas. |
| **Group C** | Atmospheres containing ethyl-ether vapours, ethylene, or cyclo-propane. |
| **Group D** | Atmospheres containing gasoline, hexane, naphtha, benzine, butane, propane, alcohol, benzol, lacquer solvent vapours, or natural gas. |
| **Group E** | Atmospheres containing metal dust, including aluminum, magnesium and their commercial alloys and other metals of similar hazardous characteristics. |
| **Group F** | Atmospheres containing carbon black, coal or coke dust. |
| **Group G** | Atmospheres containing flour, starch or grain dust. |

## Hazardous Location Definitions - International

The International Electrotechnical Commission (IEC) classifies hazardous locations by Zone and Group. Zone is similar to the term “Division” in that it defines the likelihood of hazard:

| | |
|---|---|
| **Zone 0** | An area in which an explosive gas/air mixture is constantly present or present for long periods of time. |
| **Zone 1** | An area in which an explosive gas/air mixture is likely to occur during normal operation (Similar to Division 1). |
| **Zone 2** | An area in which an explosive/air mixture is not likely to occur but if so, only for short periods of time (Similar to Division 2). |

## NEMA Enclosure Ratings

Certain Winters products (i.e. pressure transmitters and pressure switches) can be classified per the National Electrical Manufacturer's Association Enclosure (NEMA) classifications. NEMA is a non-profit trade organization composed of manufacturers of electrical power apparatus. NEMA created voluntary standards for electrical enclosures. These classifications describe the environment in which the product can be used due to the protection the enclosure provides. ("Enclosure" includes electrical and mechanical connections and external adjustments). Among others, NEMA classifies enclosures based on the effects of external icing, corrosion and rusting, or contamination from oil and coolants.

Pressure switches, transmitters and other electronic products may also be classified according to the voluntary standards set by NEMA for electrical enclosures.

| Type | Seal | Indoor/Outdoor | Description |
|---|---|---|---|
| 1 | General Purpose | Indoor | Protection against ingress of solid foreign objects (falling dirt) |
| 2 | Drip-proof | Indoor | Protection against ingress of solid foreign objects (falling dirt); and protection against ingress of water (dripping and light splashing) |
| 3 | Dust-tight/rain-tight | Outdoor | Protection against ingress of solid foreign objects (falling dirt and windblown dust); protection against ingress of water (rain, sleet, snow); and that will be undamaged by the external formation of ice on the enclosure |
| 3R | Dust-tight/rain-tight | Outdoor | Protection against ingress of solid foreign objects (falling dirt); protection against ingress of water (rain, sleet, snow); and that will be undamaged by the external formation of ice on the enclosure |
| 4 | Water-tight/dust-tight | Indoor/Outdoor | Protection against ingress of solid foreign objects (falling dirt and windblown dust); protection against ingress of water (rain, sleet, snow, splashing water, and hose directed water); and that will be undamaged by the external formation of ice on the enclosure |
| 4X | Water-tight/dust-tight | Indoor/Outdoor | Protection against ingress of solid foreign objects (windblown dust); protection against the ingress of water (rain, sleet, snow, splashing water, and hose directed water); protection against corrosion; and that will be undamaged by the external formation of ice on the enclosure |
| 5 | Dust-tight | Indoor | Protection against ingress of solid foreign objects (falling dirt and settling airborne dust, lint, fibers, and flyings); protection against ingress of water (dripping and light splashing) |
| 6 | Water-tight/dust-tight | Indoor/Outdoor | Protection against ingress of solid foreign objects (falling dirt); protection against ingress of water (hose directed water and the entry of water during occasional temporary submersion at a limited depth); and that will be undamaged by the external formation of ice on the enclosure |
| 6P | Water-tight/dust-tight | Indoor/Outdoor | Protection against ingress of solid foreign objects (falling dirt); protection against ingress of water (hose directed water and the entry of water during prolonged submersion at a limited depth); that provides an additional level of protection against corrosion and that will be undamaged by the external formation of ice on the enclosure |
| 7 | Explosion proof/Class I Groups A, B, C, D | Indoor Hazardous | Enclosures constructed for indoor use in hazardous (classified) locations classified as Class I, Division 1, Groups A, B, C, or D as defined in NFPA 70 |
| 8 | Explosion proof/Class I | Indoor/Outdoor | Enclosures constructed for either indoor or outdoor use in hazardous (classified) locations classified as Class I, Division 1, Groups A, B, C, and D as defined in NFPA 70 |
| 9 | Explosion Proof/Class II Groups E or G | Indoor Hazardous | Enclosures constructed for indoor use in hazardous (classified) locations classified as Class II, Division 1, Groups E, F, or G as defined in NFPA 70 |
| 11 | Oil-tight/Corrosion | Indoor | Protection from corrosive effects of gases and liquid dripping, seepage and external condensation or corrosive, oil immersion |
| 12 | Oil-tight/Dust-tight | Indoor | Protection against ingress of solid foreign objects (falling dirt and circulating dust, lint, fibers, and flyings); protection against ingress of water (dripping and light splashing) |
| 13 | Oil-tight/Dust-tight | Indoor | Protection against ingress of solid foreign objects (falling dirt and circulating dust, lint, fibers, and flyings); protection against ingress of water (dripping and light splashing); protection against the spraying, splashing, and seepage of oil and non-corrosive coolants |

## CRN (Canadian Registration Number)

The Canadian Registration Number (CRN) is a number issued by each province/territory in Canada to the design of boilers, pressure vessels or fittings. Industrial instrumentation such as pressure gauges, thermometers and related accessories all fall under this jurisdiction. The CRN identifies that the design has been accepted and registered for use in that province/territory. Please refer to the individual product pages to see if a series is CRN registered.

| Prov. | Pressure Gauges | Diaphragm Seals | Thermowells | Mini Ball Valves | Needle Valves | Multiport and Block & Bleed Valves | Cooling Towers, Syphons, Snubbers and Test Plugs | WinSMART™/ Transmitters/ Switches | Over-pressure Protector |
|---|---|---|---|---|---|---|---|---|---|
| ON | 0F6751.5R8 | 0F6751.5R8<br>0F24177.5** | 0F6751.5R80 | C6751.5R40 | C18567.50 | C19638.50 | F6751.5R8 | 0F24008.5<br>0F17528.5<br>0F20906.5ADD1* | 0F11487.5R1 |
| QC | 0F6751.56R8 | 0F6751.56R8<br>0F24177.56** | 0F6751.56R80 | C6751.56R40 | C18567.56 | 0C19638.56 | 0F6751.56R8 | 0F17528.56<br>0F20906.56ADD1* | 0F11487.56R1 |
| BC | 0F6751.51R8 | 0F6751.51R8<br>0F24177.51** | 0F6751.51R8 | 0C6751.51R40 | C18567.51 | 0C019638.51 | 0F6751.51R8 | 0F17528.51<br>0F20906.51* | 0F11487.51R1 |
| AB | 0F06751.52R8 | 0F06751.52R8<br>0F24177.52 | 0F06751.52R80 | C06751.52R40 | C18567.52 | 0C19638.52 | 0F06751.52R8 | 0F17528.52<br>0F209056.52* | 0F11487.52R1 |
| MB | 0F6751.54R80 | F6751.54R80 | F6751.54R80 | C6751.54R40 | C18567.54 | Exempt | 0F6751.54R8 | 0F17528.54<br>0F20906.54* | 0F11487.54R1 |
| SK | 0F6751.53R8 | 0F6751.53R8<br>0F24177.53 | 0F6751.53R80 | C6751.53R40 | C18567.53 | 0C19638.56 | 0F6751.53R8 | 0F17528.56<br>0F20906.56ADD1* | 0F11487.56R1 |
| NB | 0F6751.57R8 | 0F6751.57R8<br>0F24177.5 | 0F6751.57R80 | C6751.57REV4 | 0C18567.57 | 0C19638.57 | 0F6751.57R8 | 0F17528.57<br>0F20906.57ADD1* | 0F11487.57R1 |
| NS | 0F6751.58R8 | 0F6751.58R8<br>0F24177.5 | 0F6751.58R80 | C6751.58R40 | C18567.58 | 0C19638.58 | 0F6751.58R8 | 0F17528.58<br>0F20906.58ADD1* | 0F11487.58R1 |
| PE | 0F6751.59R8 | 0F6751.59R8<br>0F24177.5 | 0F6751.59R80 | C6751.59REV4 | 0C18567.59 | 0C19638.59 | 0F6751.59R8 | 0F17528.59<br>0F20906.59ADD1* | 0F11487.59R1 |
| NL | 0F6751.50R8 | 0F6751.50R8<br>0F24177.5 | 0F6751.50R80 | C6751.50REV4 | 0C18567.59 | 0C19638.50 | 0F6751.50R8 | 0F17528.50<br>0F20906.50ADD1* | 0F11487.50R1 |
| YT | 0F6751.5YR8 | 0F6751.5YR8<br>0F24177.5 | 0F6751.5YR8 | 0C6751.5YREV4 | 0C18567.5Y | 0C19638.5Y | 0F6751.5YR8 | 0F17528.5Y<br>0F20906.5YADD1* | 0F11487.5YR1 |
| NT | 0F6751.5TR8 | 0F6751.5TR8<br>0F24177.5 | 0F6751.5TR80 | C6751.5TREV4 | 0C18567.5T | 0C19638.5T | 0F6751.5TR8 | 0F17528.5T<br>0F20906.5TADD1* | 0F11487.5TR1 |
| NU | 0F6751.5NR8 | 0F6751.5NR8<br>0F24177.5 | 0F6751.5NR8 | 0C6751.5NREV4 | 0C18567.5N | 0C19638.5N | 0F6751.5NR8 | 0F17528.5N<br>0F20906.5NADD1* | 0F11487.5NR1 |

*9WPS Only **D44 Only

## *OTHER APPROVALS/STANDARDS THAT WINTERS ADHERES TO*

**ASME B40.1**
**CAN. DEPT. OF DEFENSE**
**FCI**
**NATO**
**U.S. SDWA**
**U.S. NAVY**
**U.S. DEPT. OF DEFENSE**
**U.S. COAST GUARD**

*Notes*

# WINTERS INSTRUMENTS

MANUFACTURER OF INDUSTRIAL INSTRUMENTATION



**Winters Instruments is a global manufacturer of premium quality pressure and temperature instrumentation, with distribution partners in over 90 countries. Please contact us for your nearest Regional Manager.**


**Corporate - Canada**
Winters Instruments
121 Railside Road
Toronto, Ontario
M3A 1B2
Tel: 416-444-2345
1-800-WINTERS
sales@winters.com

**Canada - Edmonton**
Winters Instruments
7503 Girard Road, #100
Edmonton, Alberta
T6B 2H2
Tel: 482-947-1124
1-800-WINTERS
sales@winters.com

**USA - Houston**
Winters Instruments
5400 W. Sam Houston Pkwy N.
Houston, Texas
77041
Tel: 281-880-8607
1-800-WINTERS
usasales@winters.com

**Europe - Middle East - Africa**
Winters Instruments
Dubai Airport Free Zone
6WB G50
Dubai, United Arab Emirates
Tel: 971-4295-9177
emeasales@winters.com

**Asia - Shanghai**
Winters Instruments
Room 203, Building 8,
No. 471, Guiping Road
Shanghai
200233
China
Tel: 86-21-6104-2610
asiasales@winters.com
www.wintersasia.com

**Latin America**
Winters Instruments
Lamadrid 121
Los Troncos del Talar,
B1608CEC
Buenos Aires, Argentina
Tel: 54-11-4715-3036
latinsales@winters.com
www.winters.com.ar


**Download Winters' literature at www.winters.com**
Winters Instruments is ISO 9001:2015 Registered


08/25/2026
MKT796